2007 PRIUS
ELECTRICAL WIRING DIAGRAM
SYSTEM CIRCUITS

	Page
ABS	282
Air Conditioning	352
Audio System (Built–in Amplifier)	334
Audio System (Separate Amplifier)	324
Automatic Glare–Resistant EC Mirror	320
Automatic Light Control	156
Back–Up Light	184
Clock	310
Combination Meter	342
Cruise Control	262
Door Lock Control	202
Engine Control	128
EPS	276
Front Fog Light	158
Front Wiper and Washer	194
Garage Door Opener	322
Headlight	144
Headlight Beam Level Control	152
Horn	308
Hybrid Vehicle Immobiliser System	80
Ignition	124
Illumination	176
Interior Light	168
Key Reminder	188
Light Auto Turn Off System	160
Luggage Compartment Door Opener	234
Mirror Heater	316
Multi–Display (Built–in Amplifier)	334
Multi–Display (Separate Amplifier)	324
Multiplex Communication System (AVC–LAN Bus)	76
Multiplex Communication System (BEAN Bus)	68
Multiplex Communication System (CAN Bus)	72
Power Outlet	312
Power Source	64
Power Window	198
Push Button Start System	80
Radiator Fan and Condenser Fan	348
Rear Window Defogger	316
Rear Wiper and Washer	196
Remote Control Mirror	314
Seat Belt Waning	192
Shift Control System	248
Smart Key System	208
SRS	301
Stop Light	182
Taillight	176
Theft Deterrent	238

	Page
Tire Pressure Warning System	296
TOYOTA Hybrid System	92
TRAC	282
Turn Signal and Hazard Warning Light	164
VSC	282
Wireless Door Lock Control (w/ Smart Key System)	208
Wireless Door Lock Control (w/o Smart Key System)	226

F RELAY LOCATIONS

[Engine Compartment]

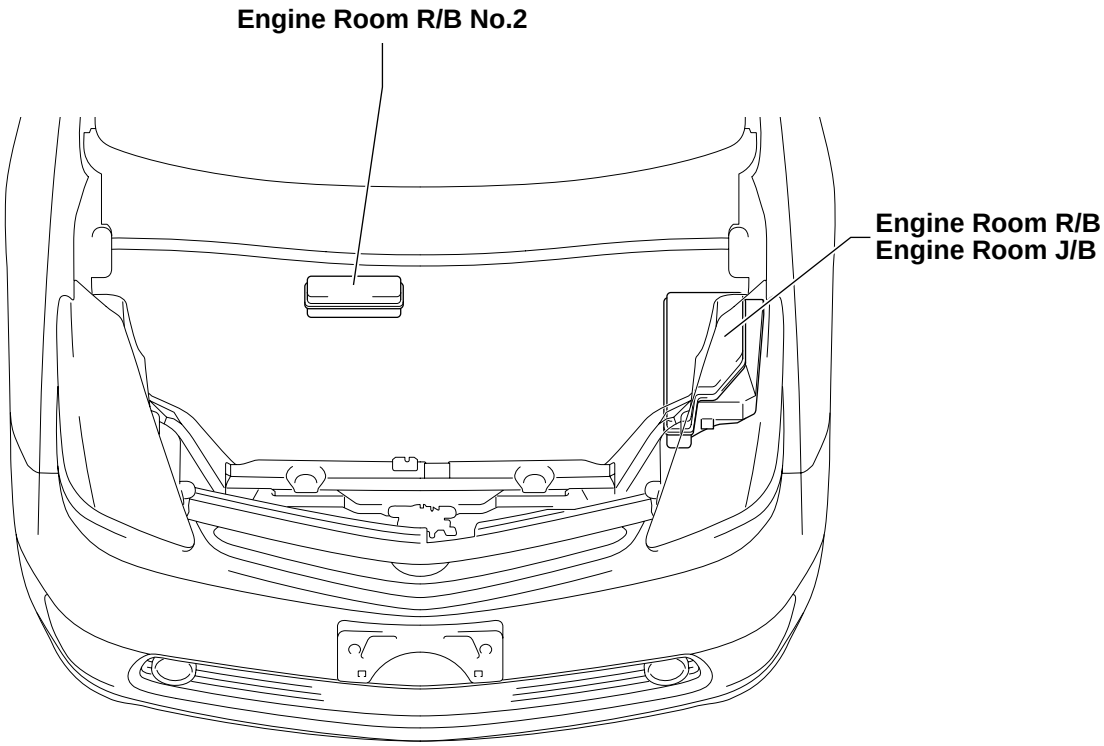

[Instrument Panel]

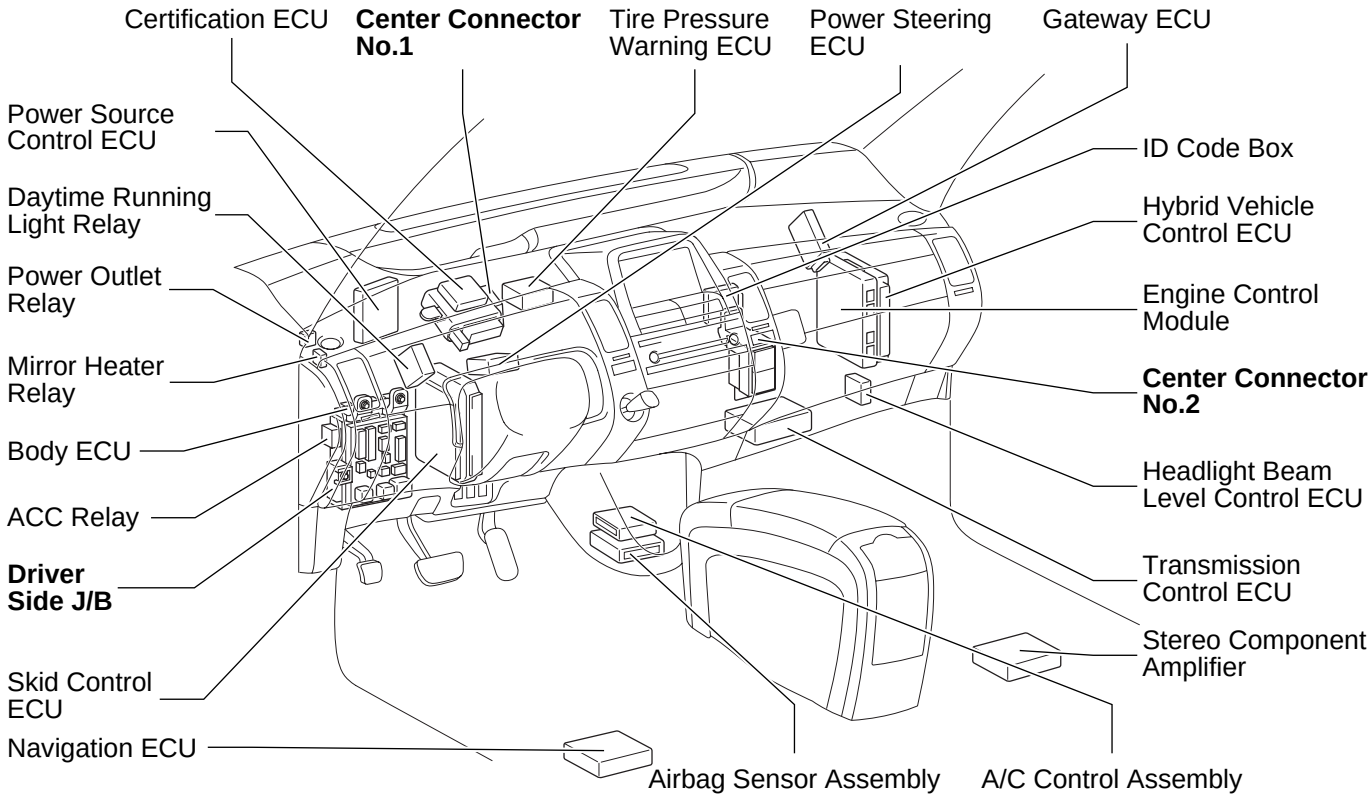

[Body]

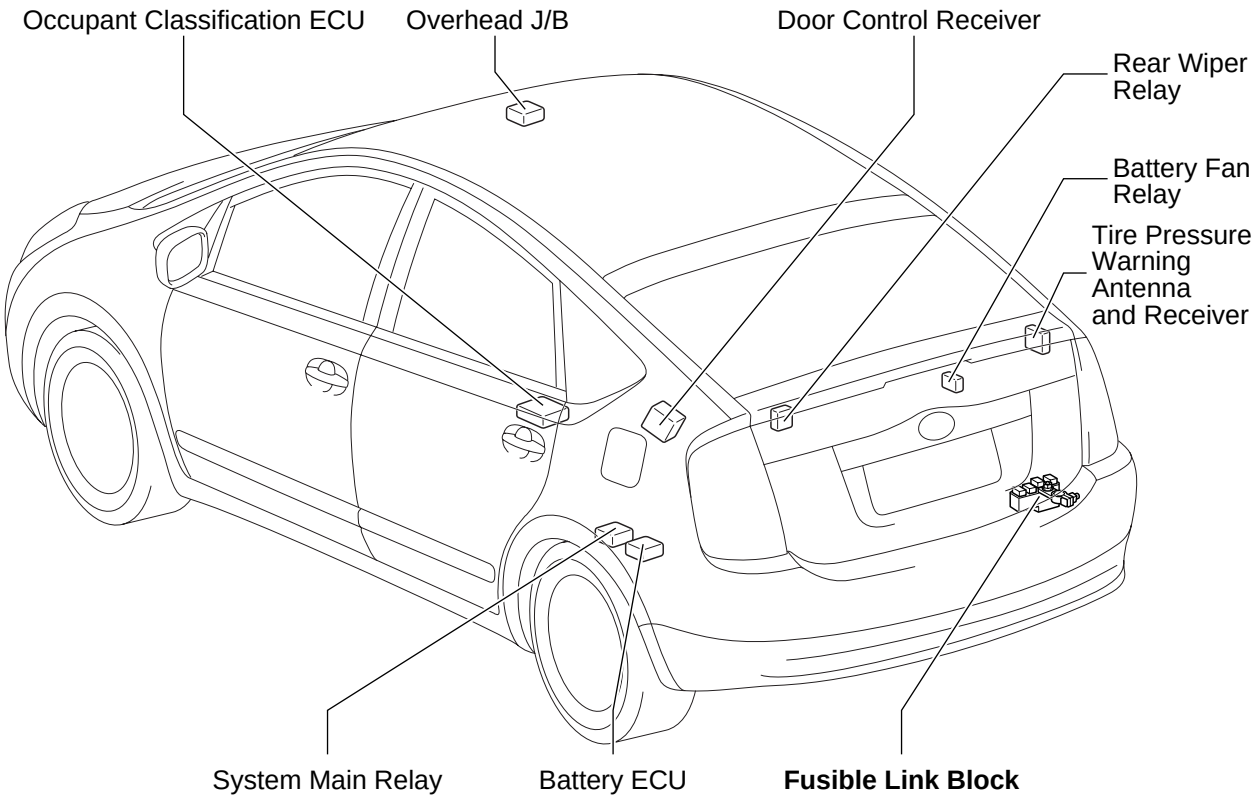
Occupant Classification ECU
Overhead J/B
Door Control Receiver
Rear Wiper Relay
Battery Fan Relay
Tire Pressure Warning Antenna and Receiver
System Main Relay
Battery ECU
Fusible Link Block

F RELAY LOCATIONS

③ : Engine Room R/B ⬭ : Engine Room J/B	Engine Compartment Left (See Page 20)

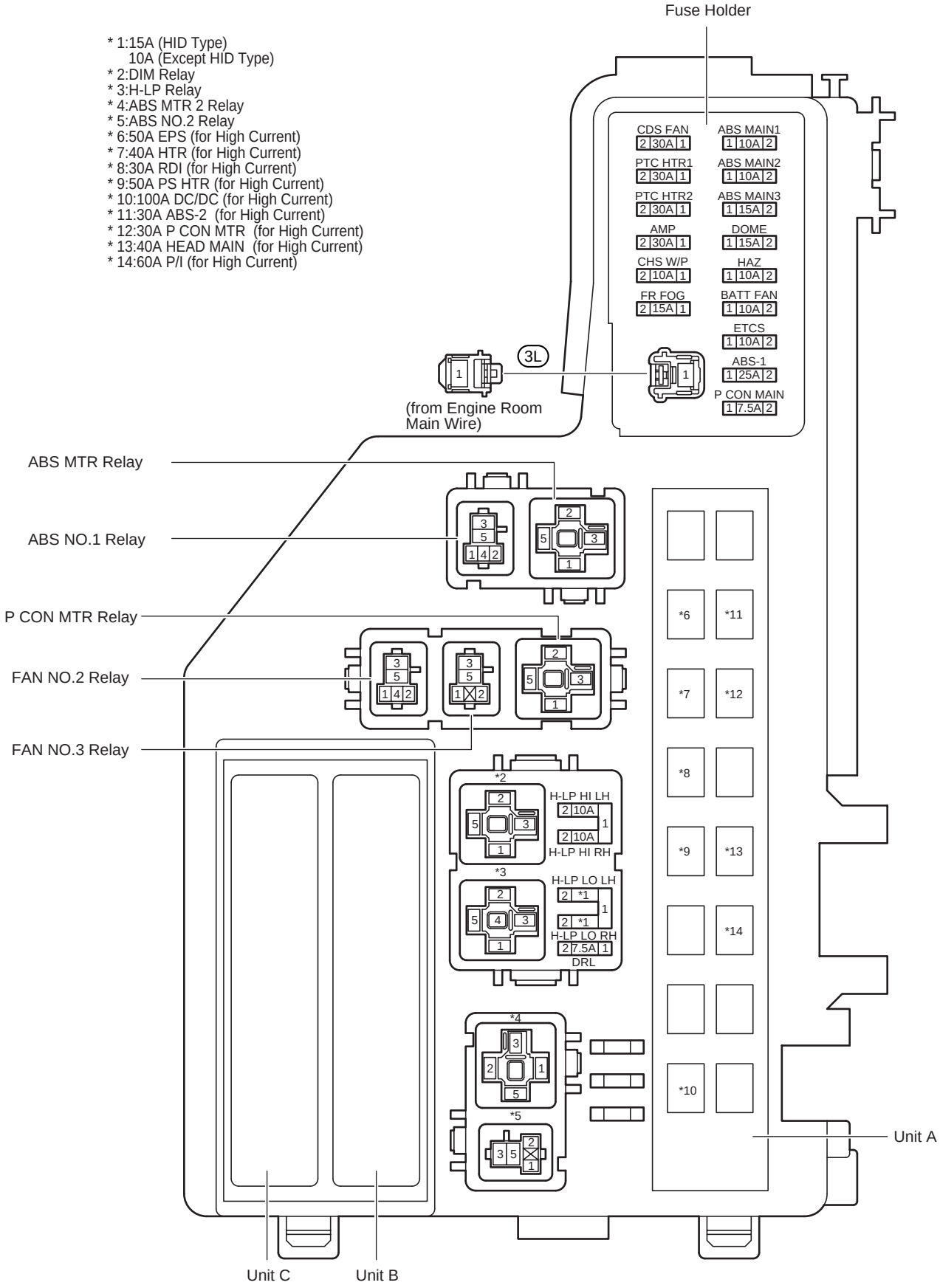

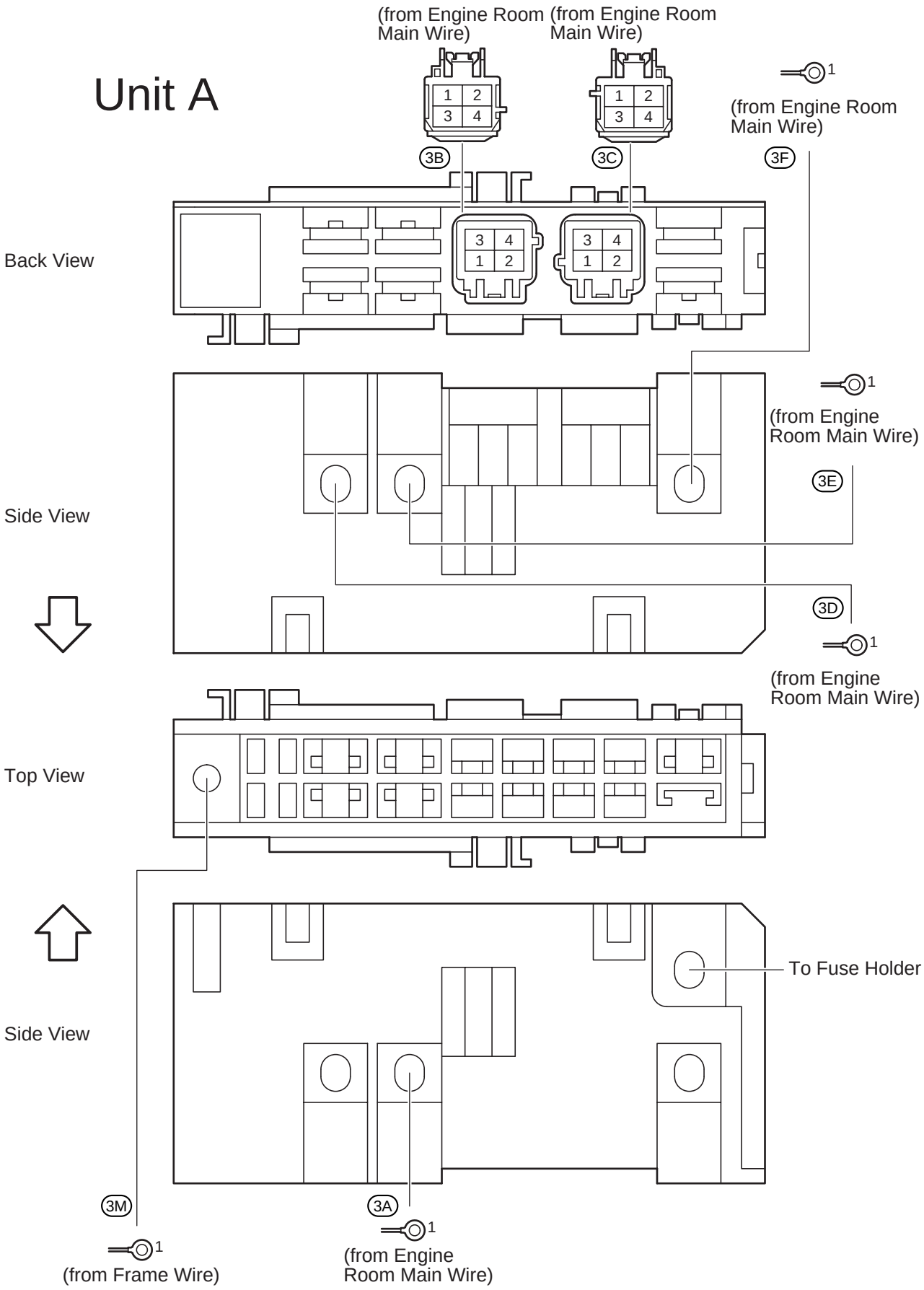
Unit A
(from Engine Room Main Wire)
(from Engine Room Main Wire)
(from Engine Room Main Wire)
3B
3C
3F
Back View
(from Engine Room Main Wire)
3E
Side View
3D
(from Engine Room Main Wire)
Top View
To Fuse Holder
Side View
3M
3A
(from Frame Wire)
(from Engine Room Main Wire)

F RELAY LOCATIONS

③ : Engine Room R/B ⬭ : Engine Room J/B	Engine Compartment Left (See Page 20)

Unit B

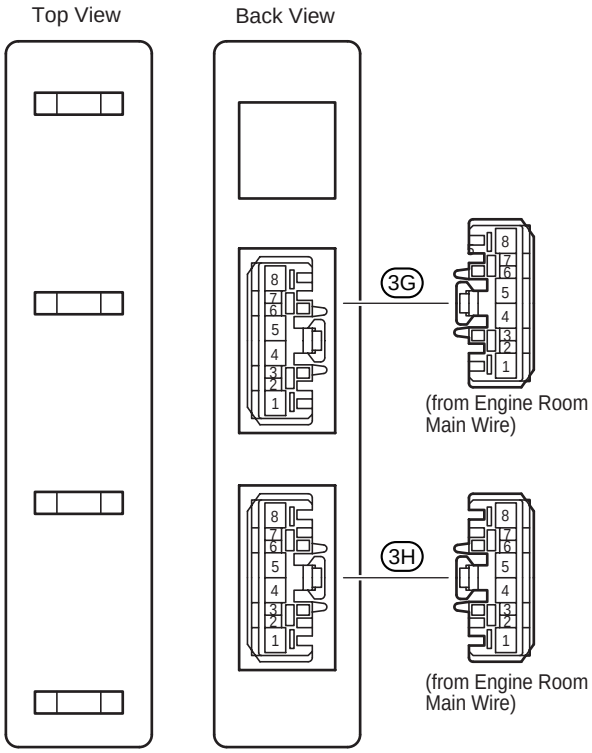

Unit C

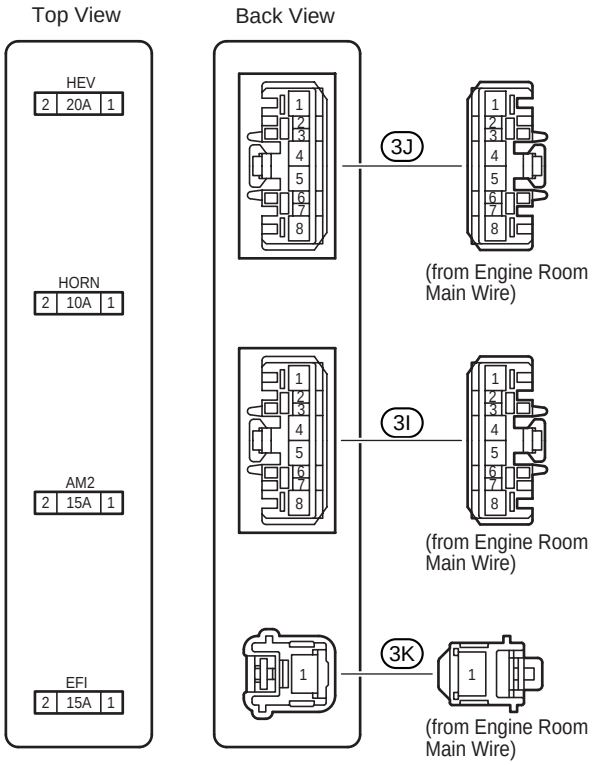

[Engine Room R/B and Engine Room J/B Inner Circuit]

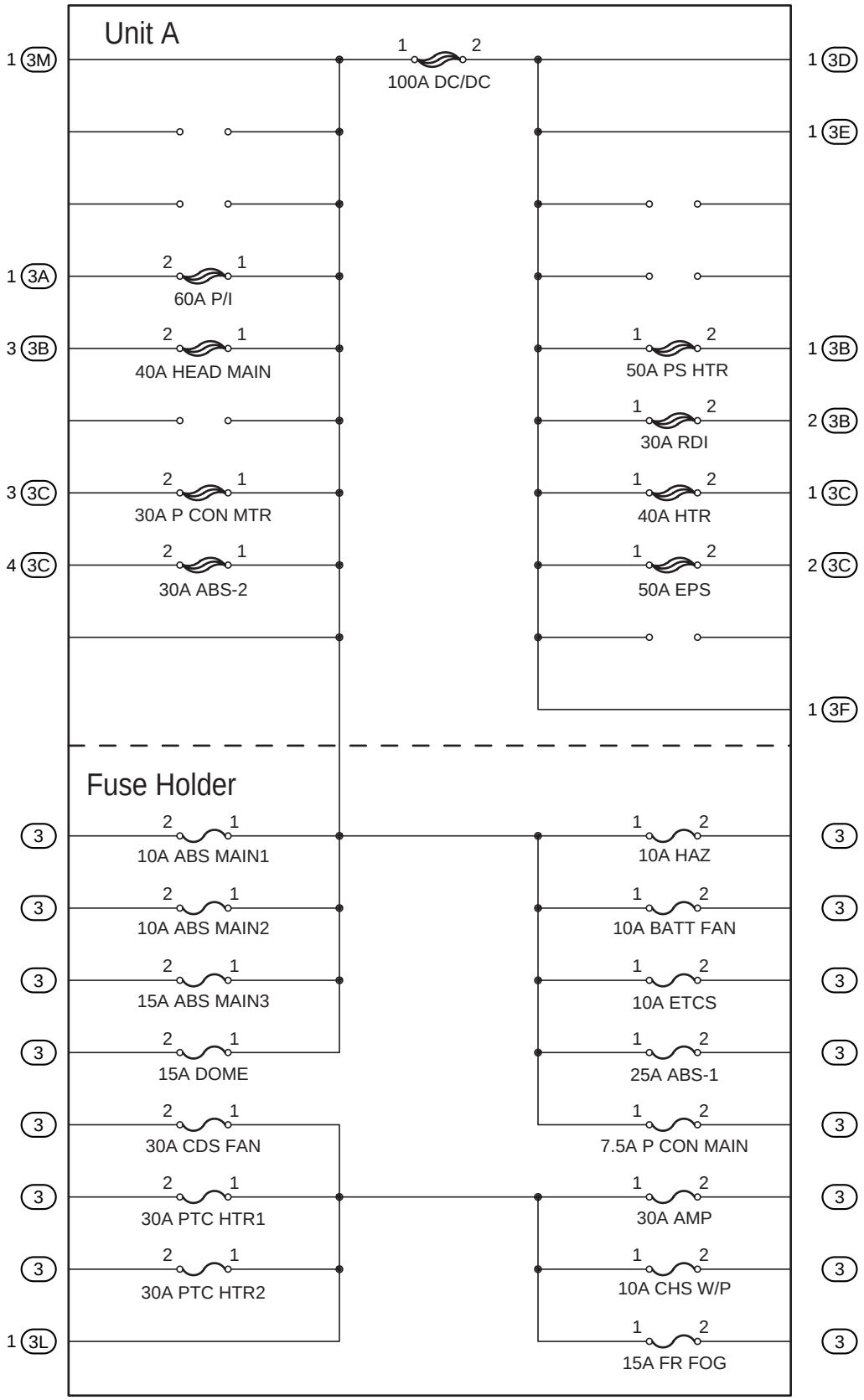

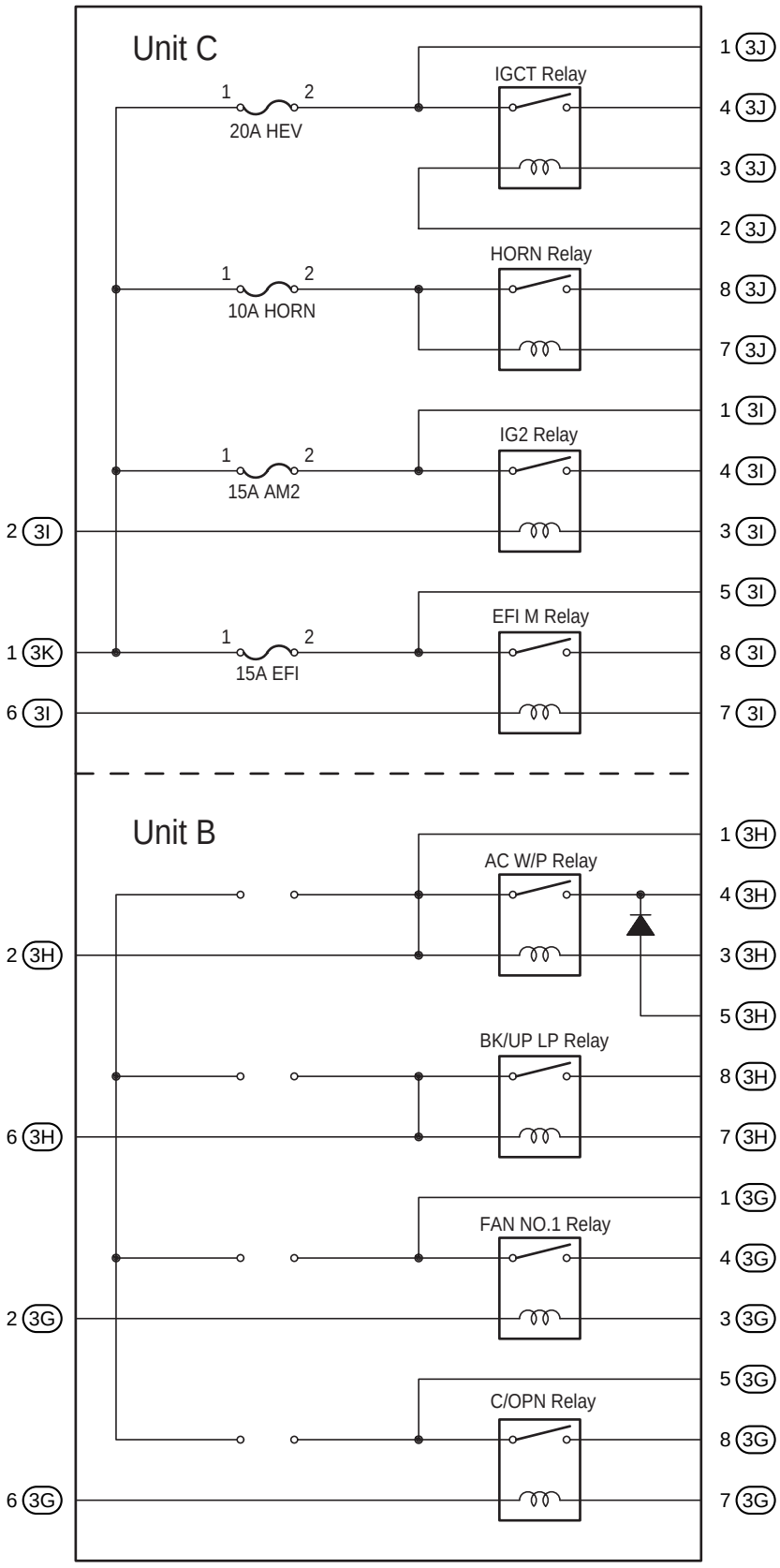
Unit C
IGCT Relay
20A HEV
HORN Relay
10A HORN
IG2 Relay
15A AM2
EFI M Relay
15A EFI
Unit B
AC W/P Relay
BK/UP LP Relay
FAN NO.1 Relay
C/OPN Relay
1 3J
4 3J
3 3J
2 3J
8 3J
7 3J
1 3I
4 3I
2 3I
3 3I
5 3I
1 3K
8 3I
6 3I
7 3I
1 3H
4 3H
2 3H
3 3H
5 3H
8 3H
6 3H
7 3H
1 3G
4 3G
2 3G
3 3G
5 3G
8 3G
6 3G
7 3G

F RELAY LOCATIONS

② : Engine Room R/B No.2	Right Side of Reserve Tank (See Page 20)

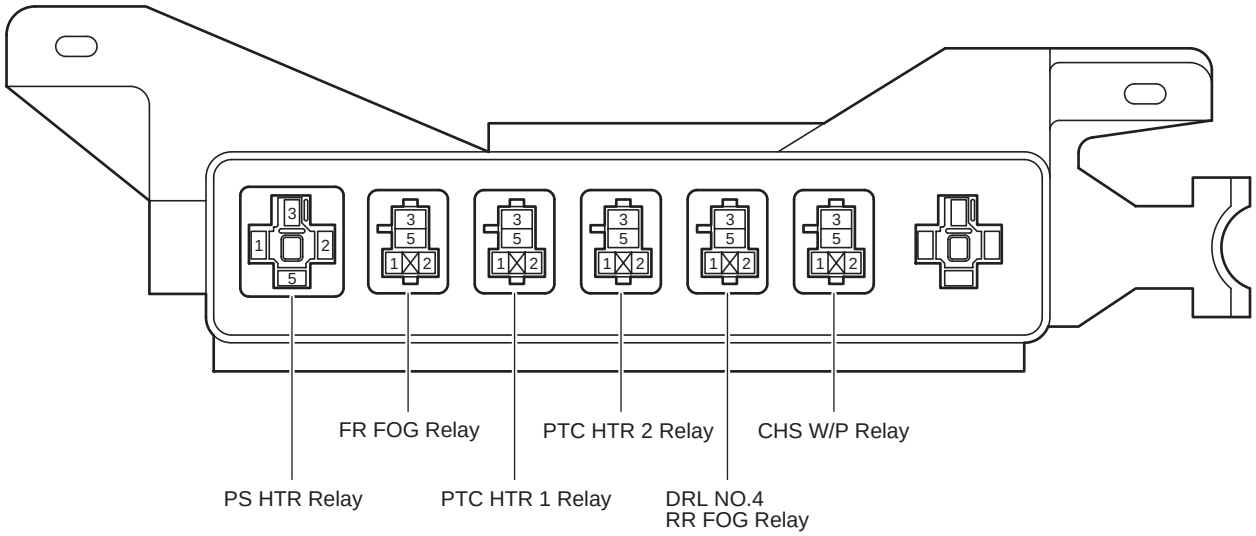

Fusible Link Block	Luggage Room Right (See Page 21)

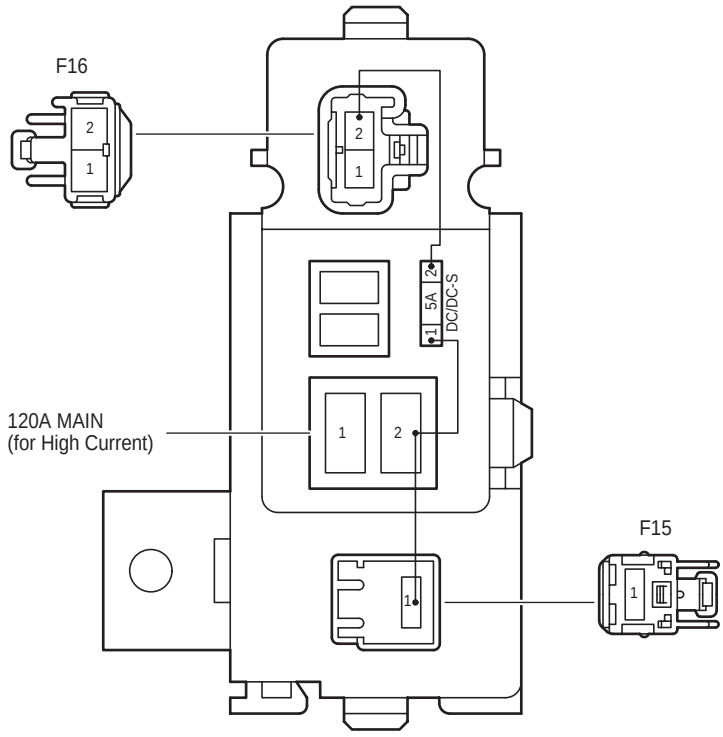

F RELAY LOCATIONS

: Driver Side J/B	Lower Finish Panel (See Page 20)

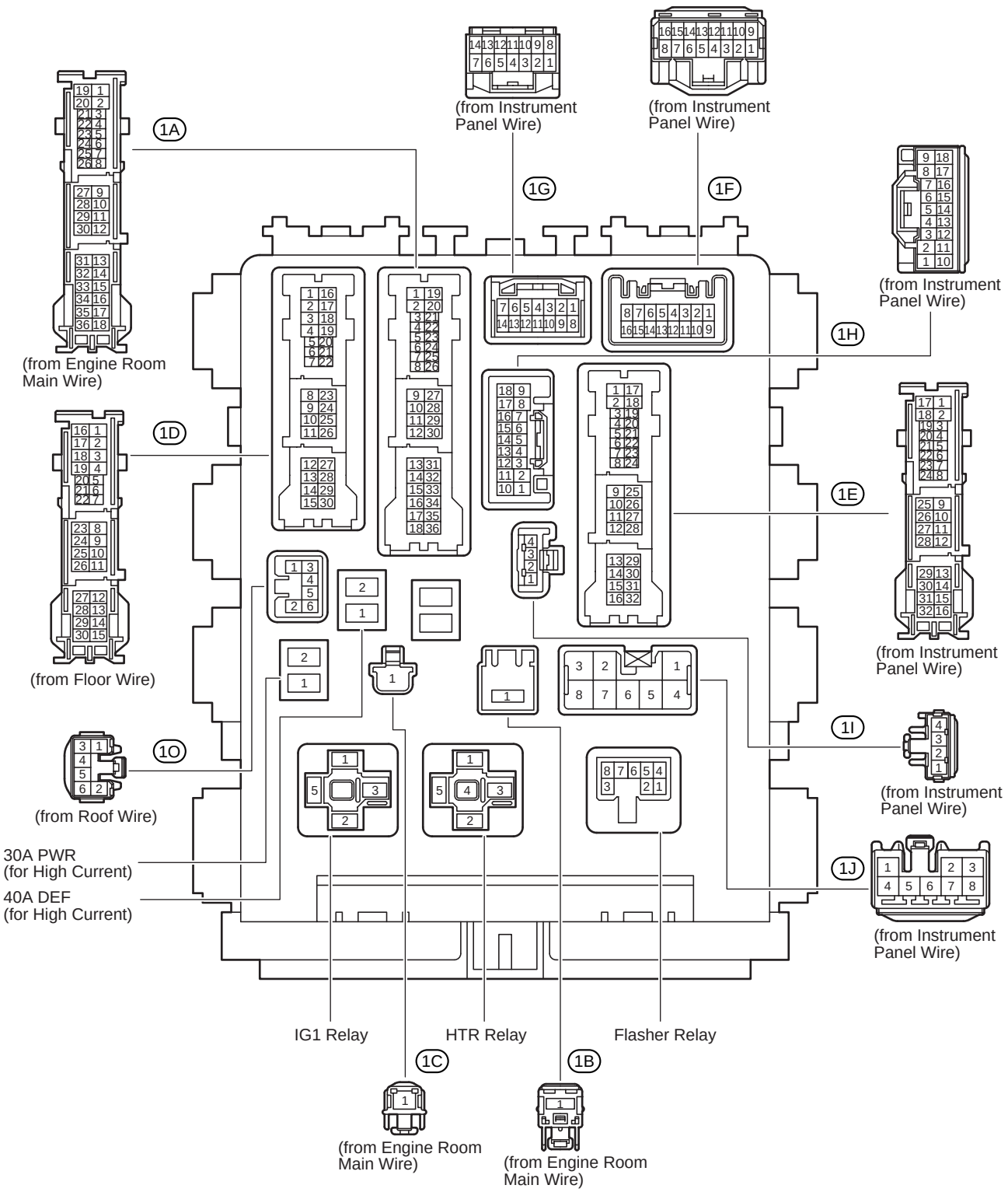

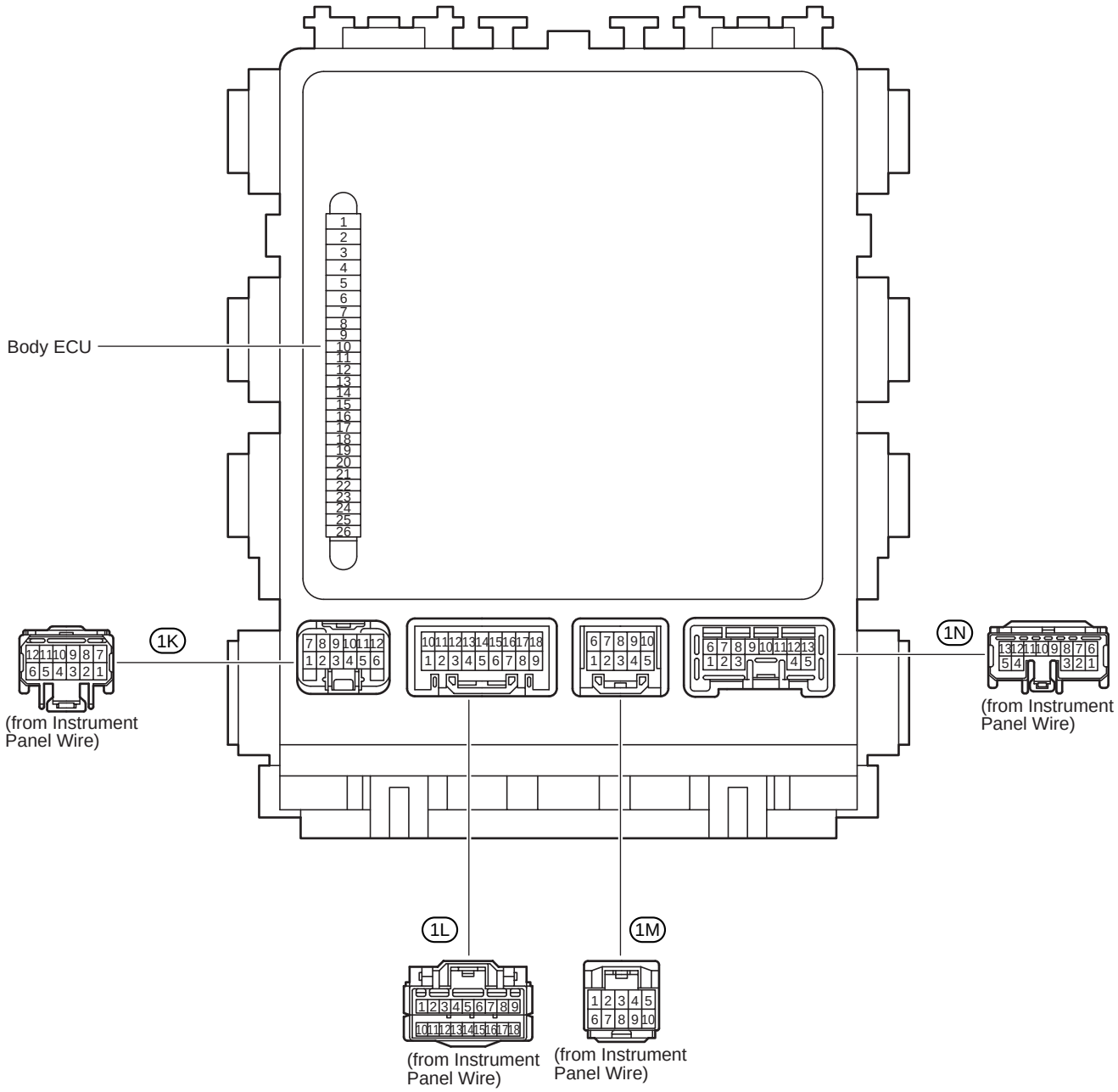
Body ECU
1K
(from Instrument Panel Wire)
1N
(from Instrument Panel Wire)
1L
(from Instrument Panel Wire)
1M
(from Instrument Panel Wire)

F RELAY LOCATIONS

: Driver Side J/B	Lower Finish Panel (See Page 20)

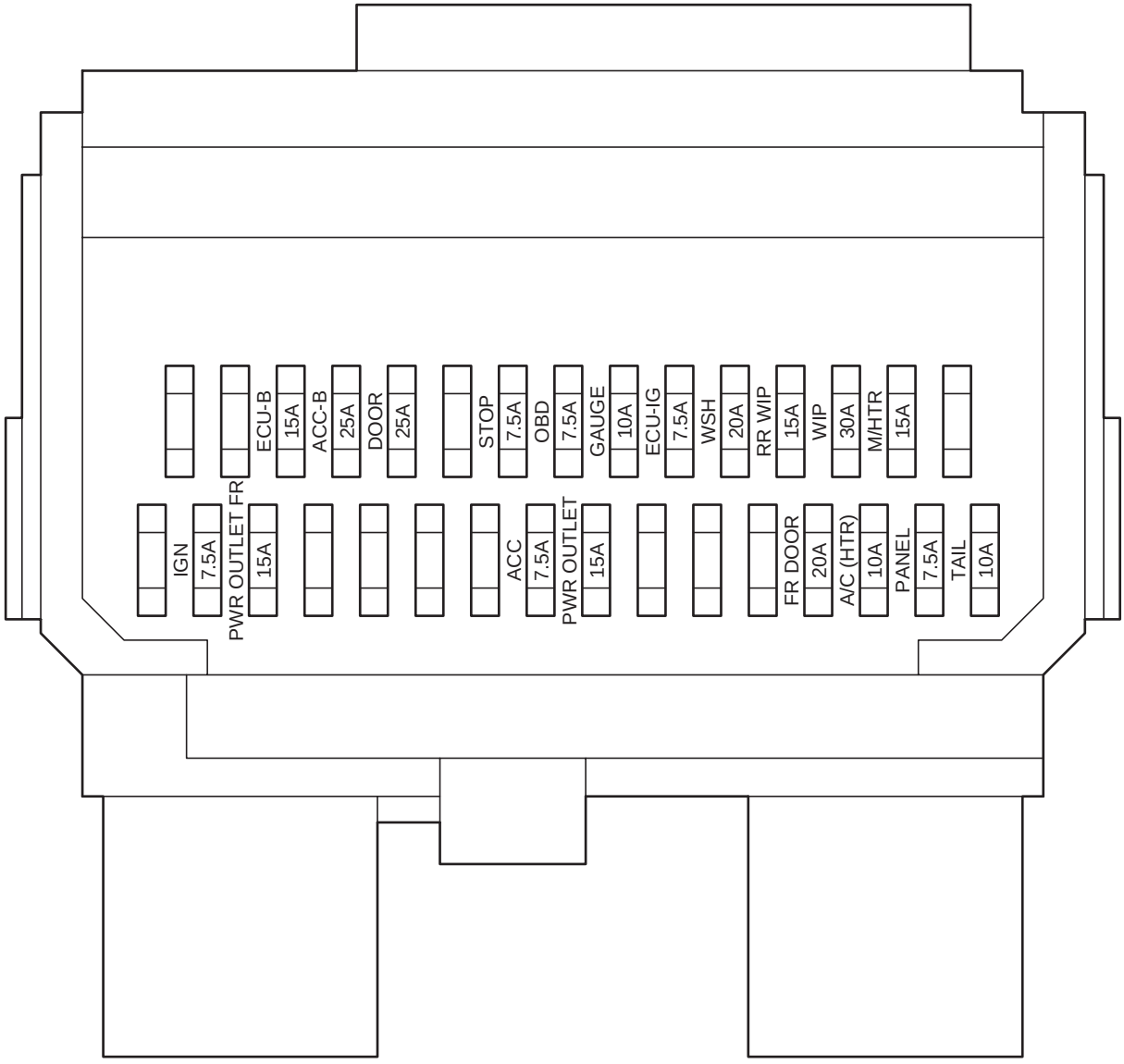

[Driver Side J/B Inner Circuit]

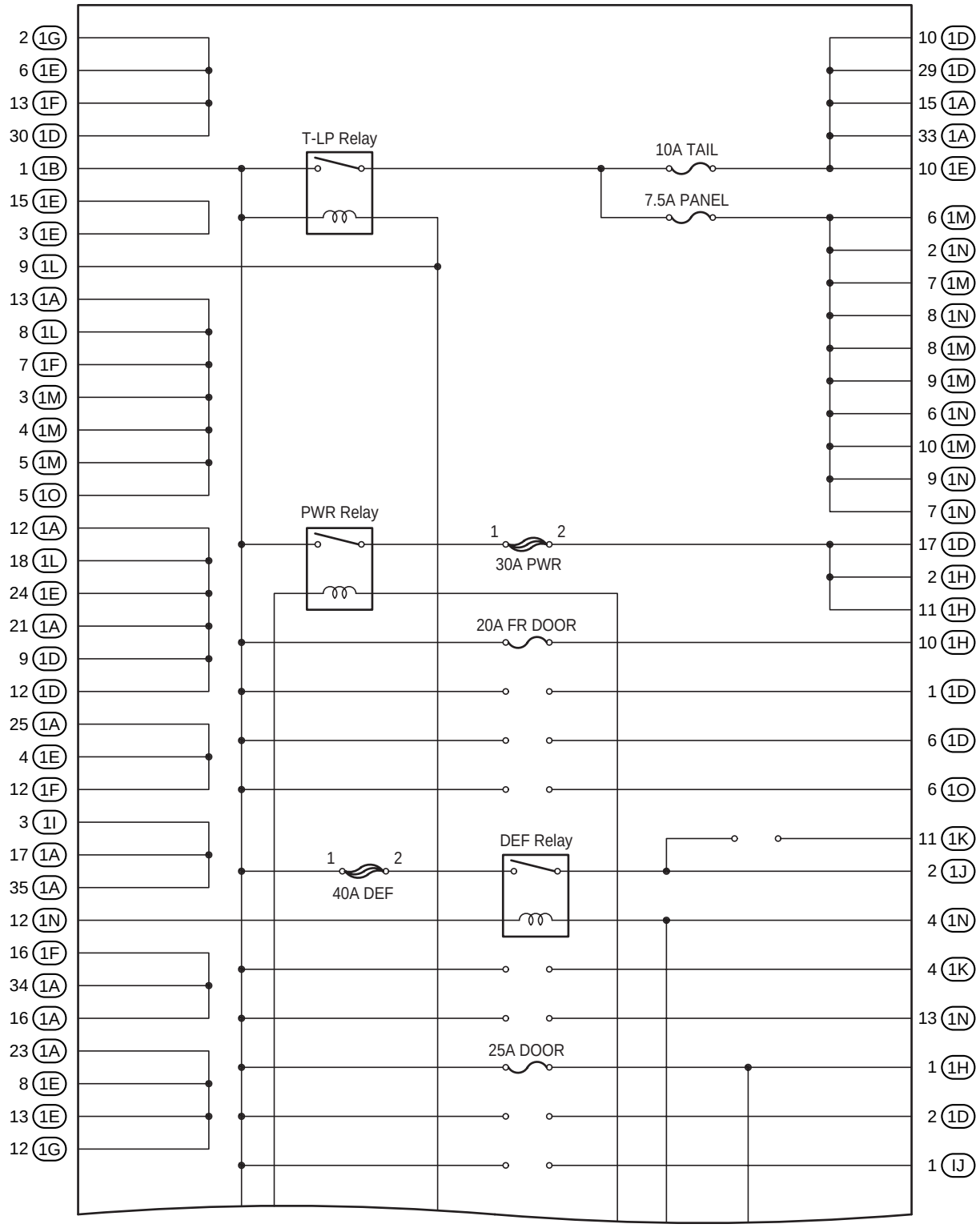

(Cont. Next Page)

(Cont'd)

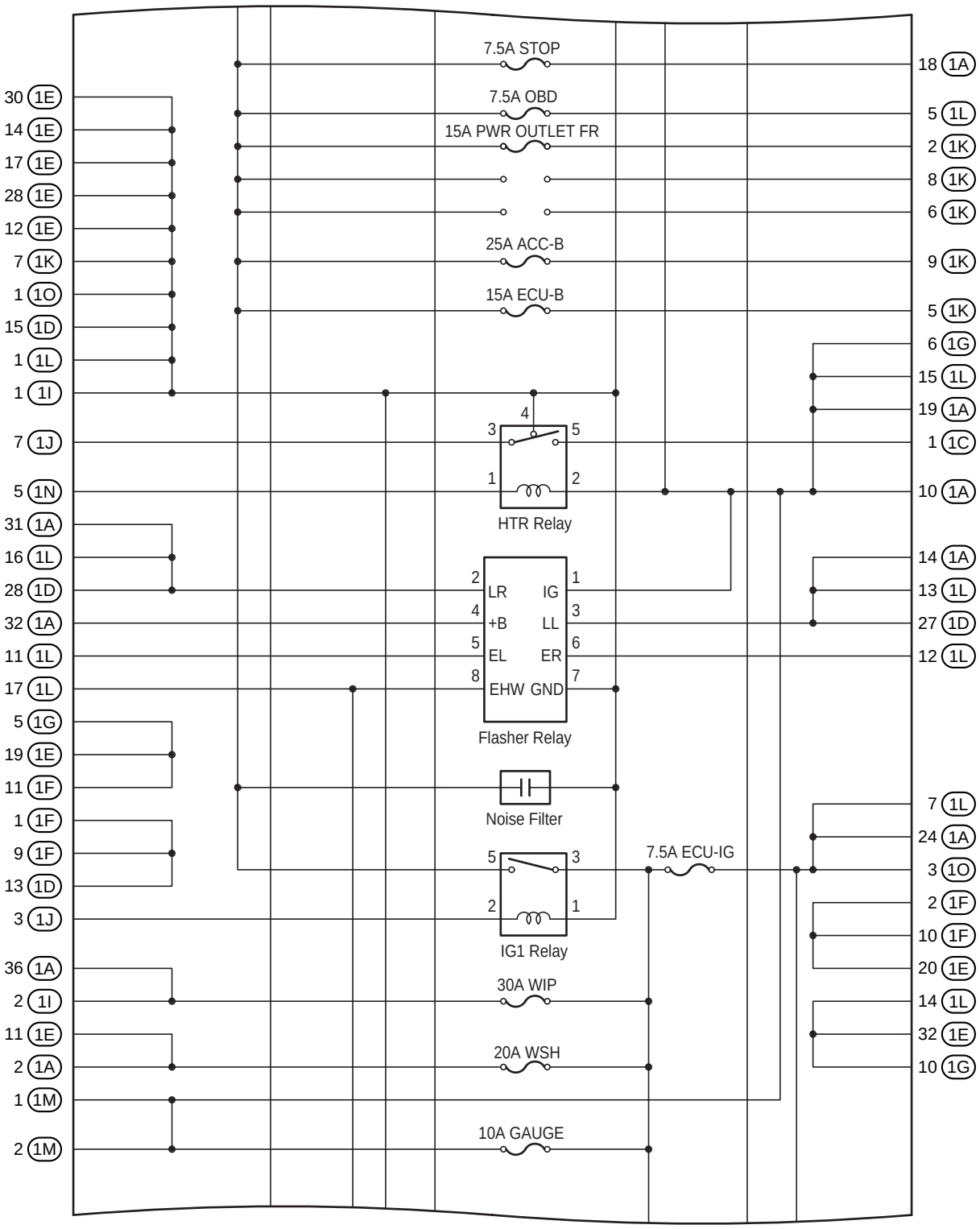

(Cont. Next Page)

[Driver Side J/B Inner Circuit]

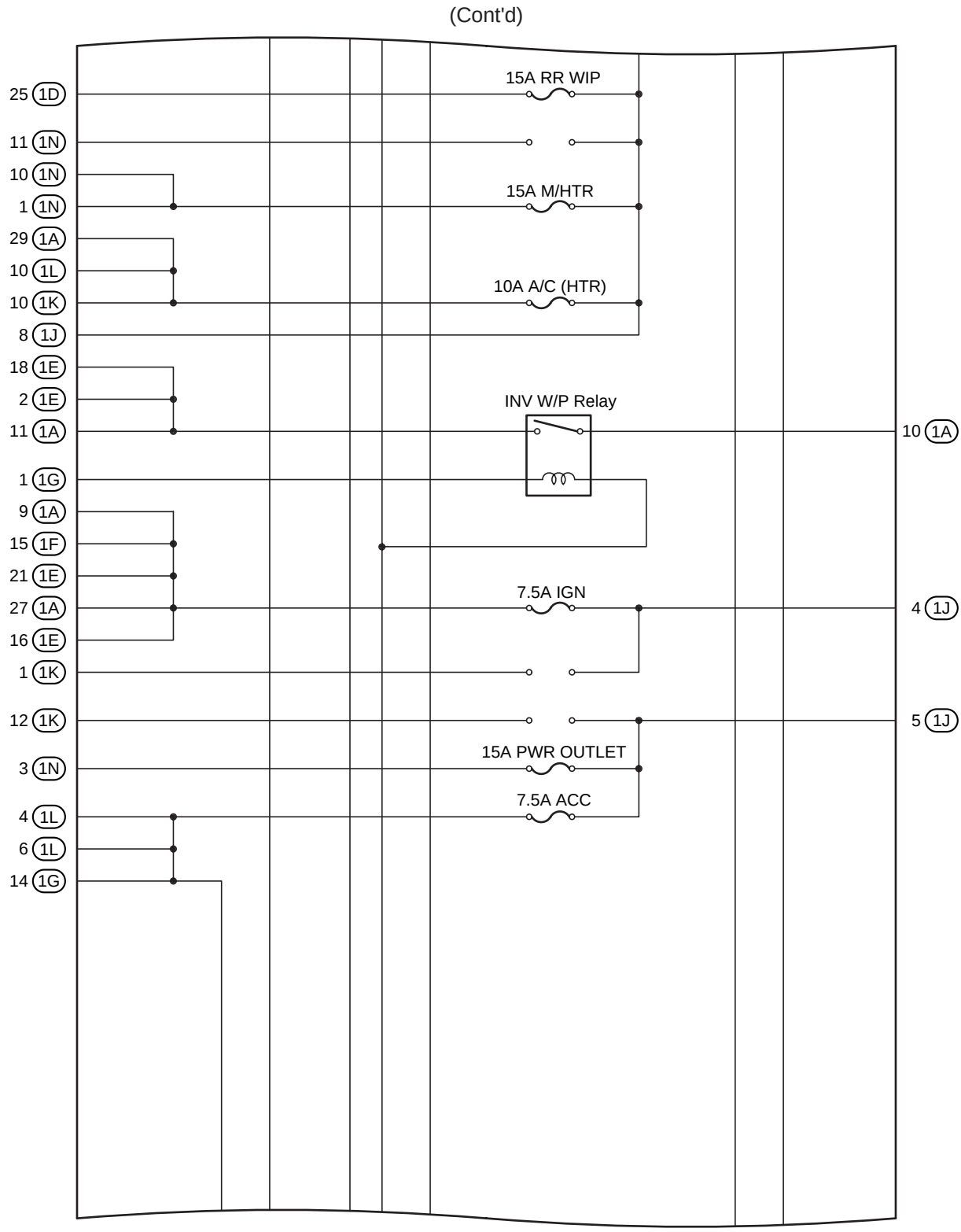

(Cont. Next Page)

(Cont'd)

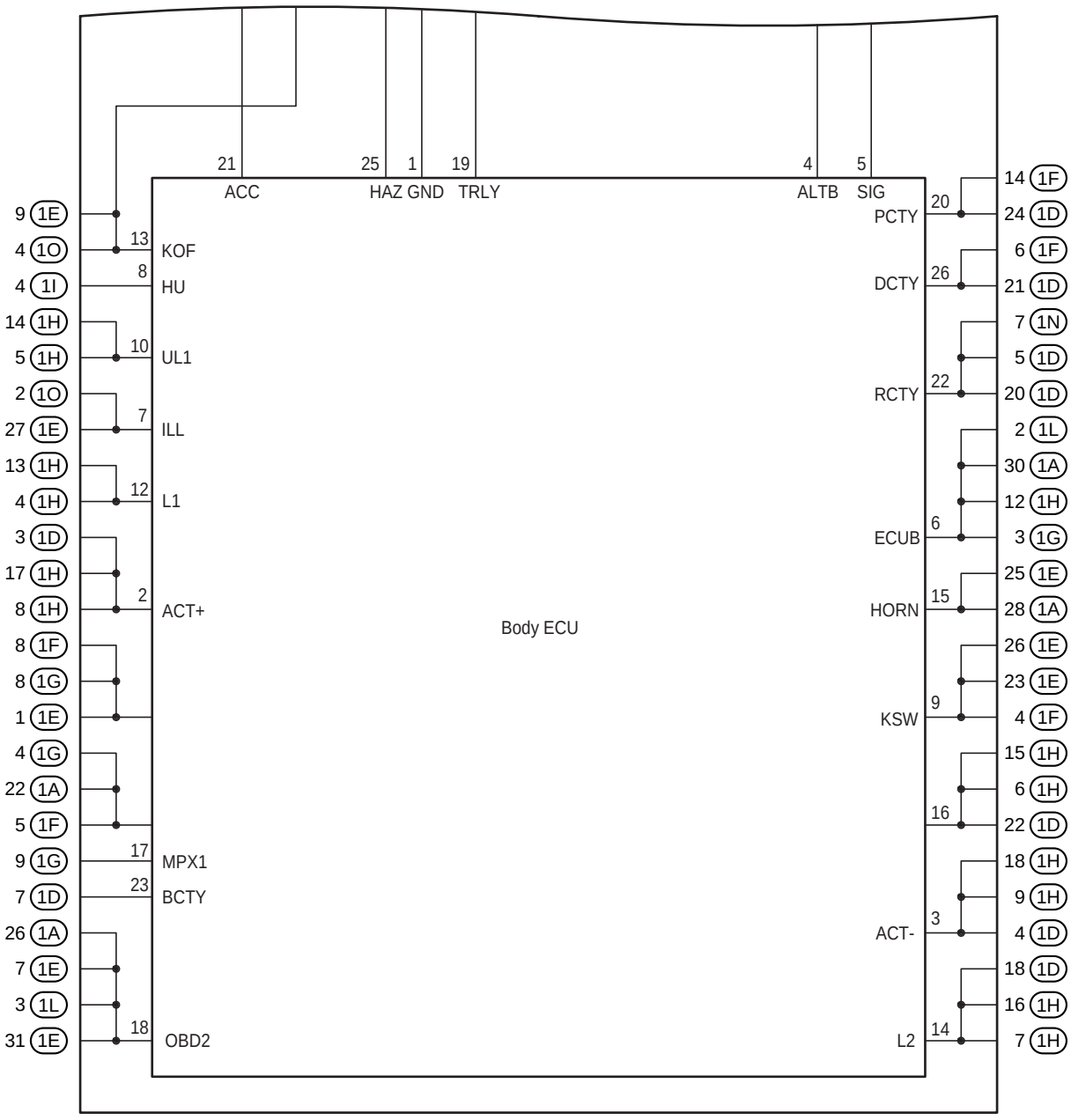
21 ACC
25 HAZ
1 GND
19 TRLY
4 ALTB
5 SIG
13 KOF
8 HU
10 UL1
7 ILL
12 L1
2 ACT+
17 MPX1
23 BCTY
18 OBD2
20 PCTY
26 DCTY
22 RCTY
6 ECUB
15 HORN
9 KSW
16
3 ACT-
14 L2
Body ECU
9 1E
4 1O
4 1I
14 1H
5 1H
2 1O
27 1E
13 1H
4 1H
3 1D
17 1H
8 1H
8 1F
8 1G
1 1E
4 1G
22 1A
5 1F
9 1G
7 1D
26 1A
7 1E
3 1L
31 1E
14 1F
24 1D
6 1F
21 1D
7 1N
5 1D
20 1D
2 1L
30 1A
12 1H
3 1G
25 1E
28 1A
26 1E
23 1E
4 1F
15 1H
6 1H
22 1D
18 1H
9 1H
4 1D
18 1D
16 1H
7 1H

F RELAY LOCATIONS

: Center Connector No.1	Behind the Combination Meter (See Page 20)

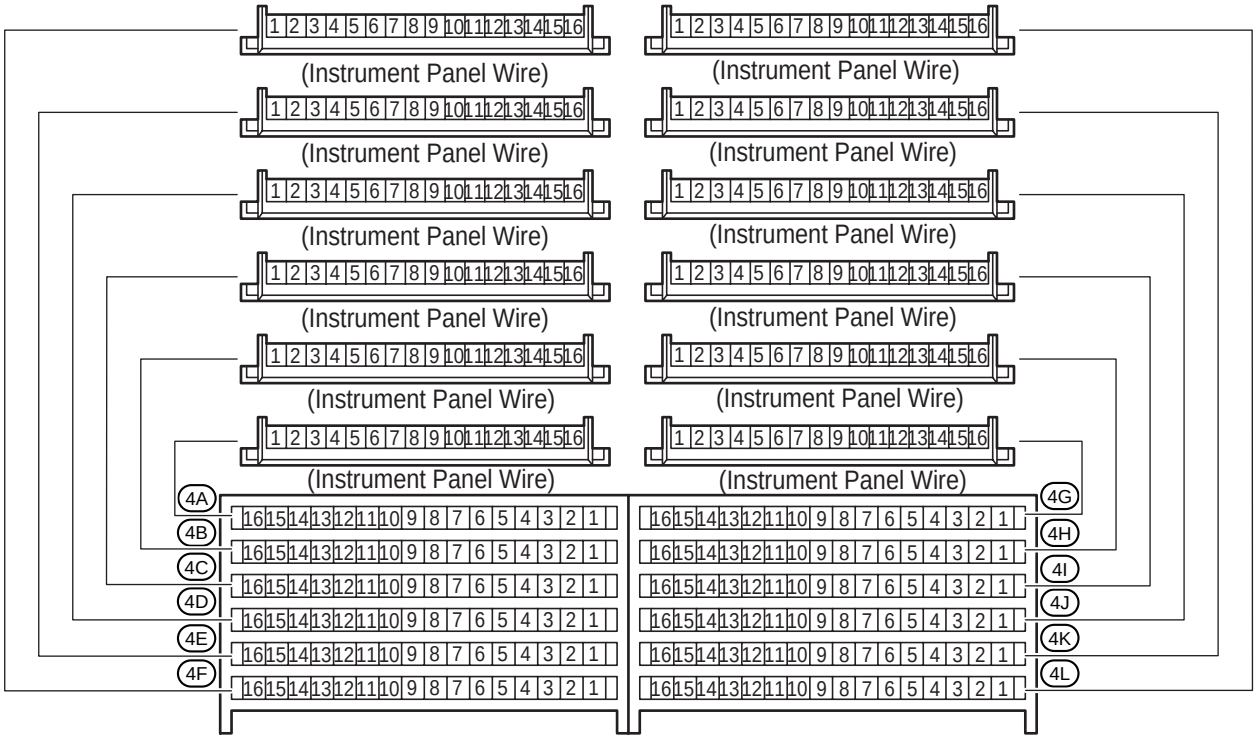

[Center Connector No.1 Inner Circuit]

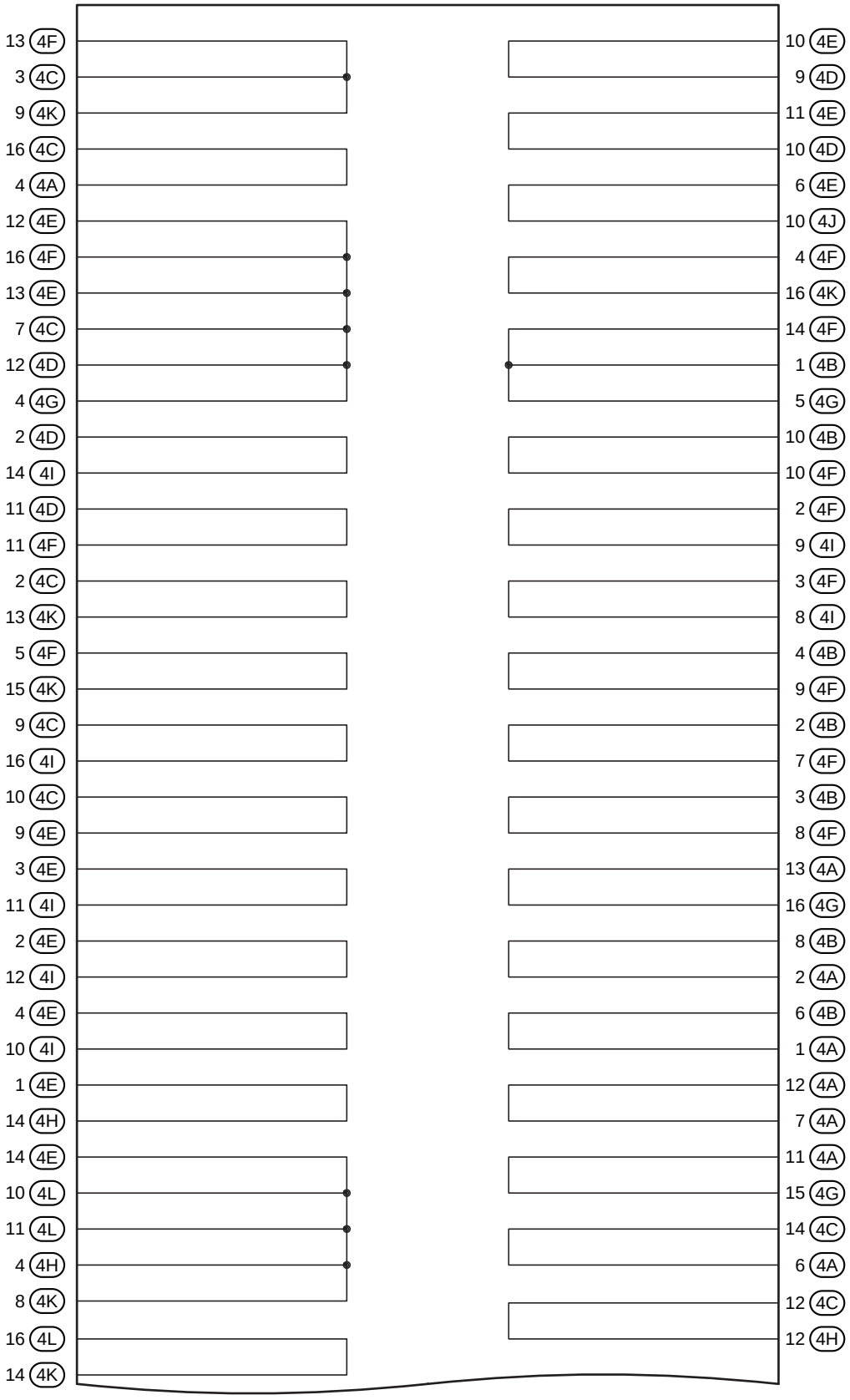

(Cont. Next Page)

(Cont'd)

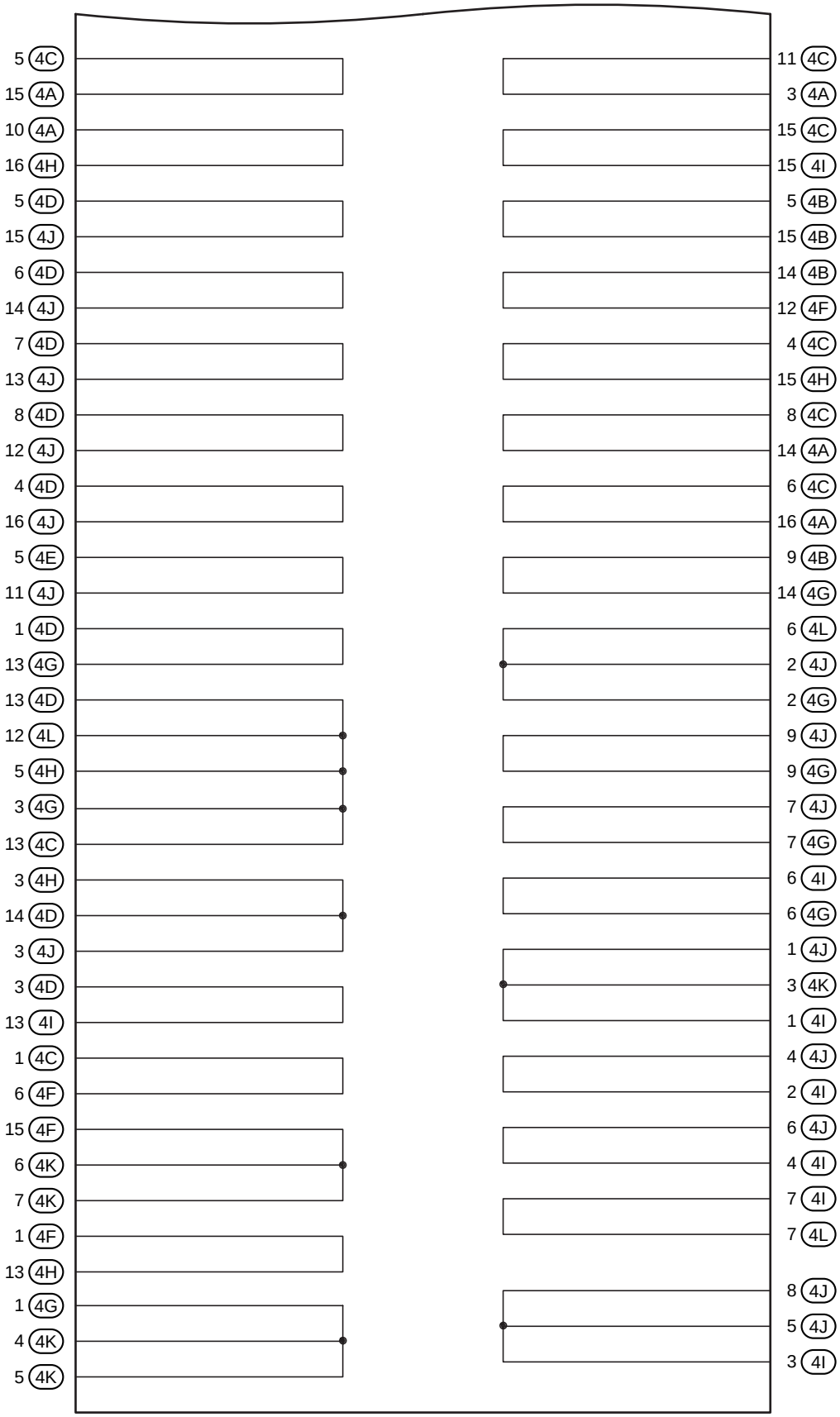
5 4C
15 4A
10 4A
16 4H
5 4D
15 4J
6 4D
14 4J
7 4D
13 4J
8 4D
12 4J
4 4D
16 4J
5 4E
11 4J
1 4D
13 4G
13 4D
12 4L
5 4H
3 4G
13 4C
3 4H
14 4D
3 4J
3 4D
13 4I
1 4C
6 4F
15 4F
6 4K
7 4K
1 4F
13 4H
1 4G
4 4K
5 4K
11 4C
3 4A
15 4C
15 4I
5 4B
15 4B
14 4B
12 4F
4 4C
15 4H
8 4C
14 4A
6 4C
16 4A
9 4B
14 4G
6 4L
2 4J
2 4G
9 4J
9 4G
7 4J
7 4G
6 4I
6 4G
1 4J
3 4K
1 4I
4 4J
2 4I
6 4J
4 4I
7 4I
7 4L
8 4J
5 4J
3 4I

F RELAY LOCATIONS

: Center Connector No.2	Instrument Panel Brace RH (See Page 20)

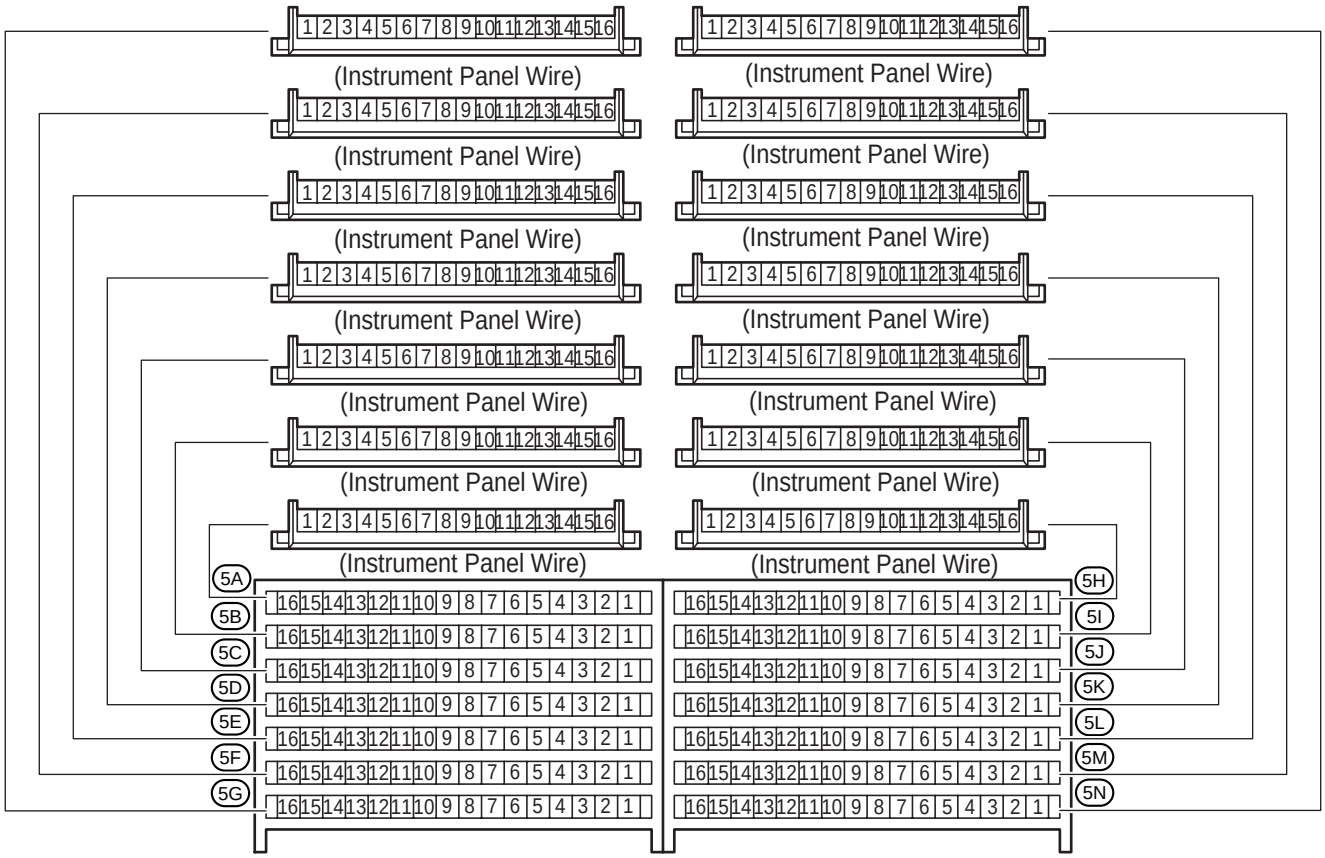

[Center Connector No.2 Inner Circuit]

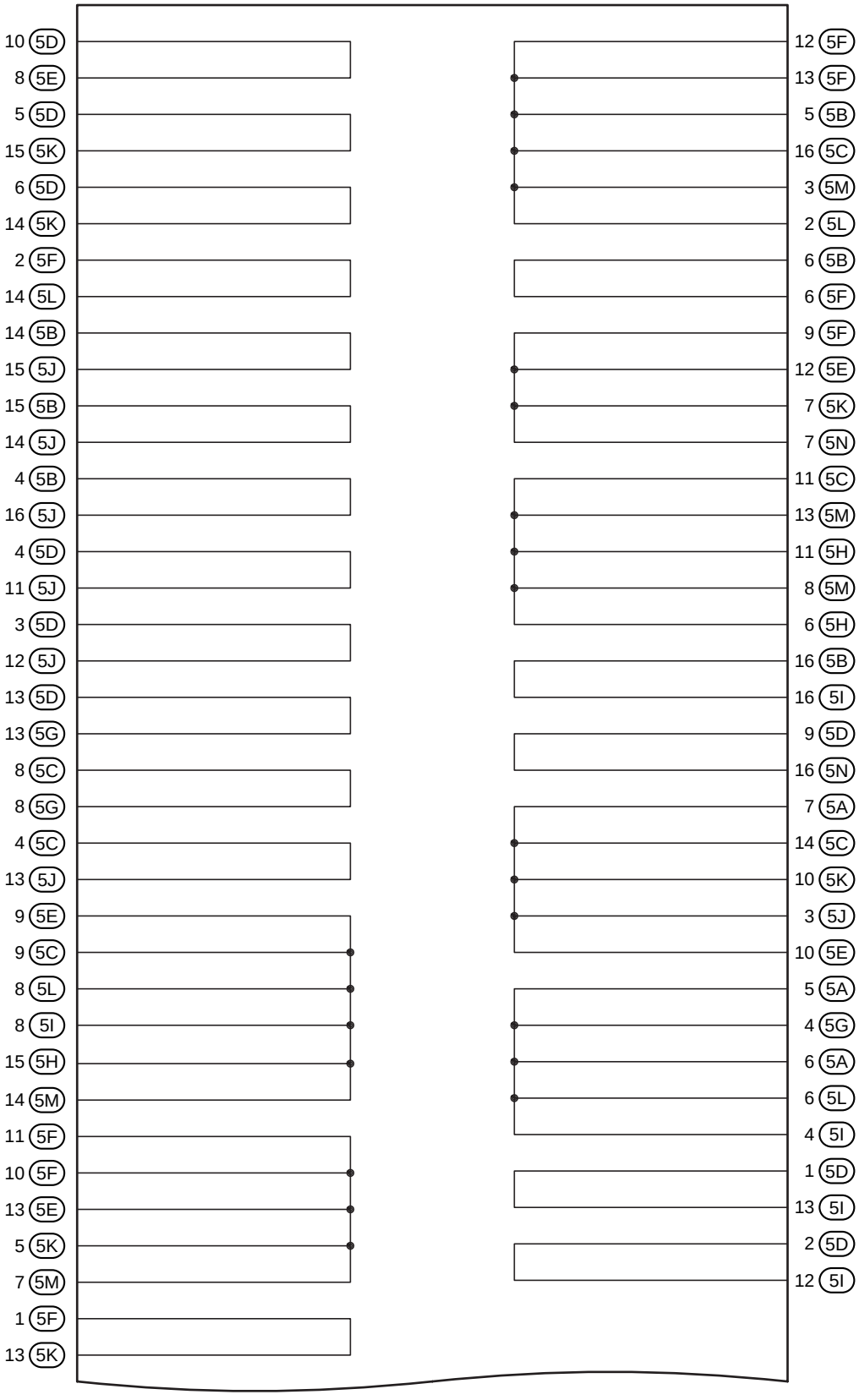

(Cont. Next Page)

[Center Connector No.2 Inner Circuit]

(Cont'd)

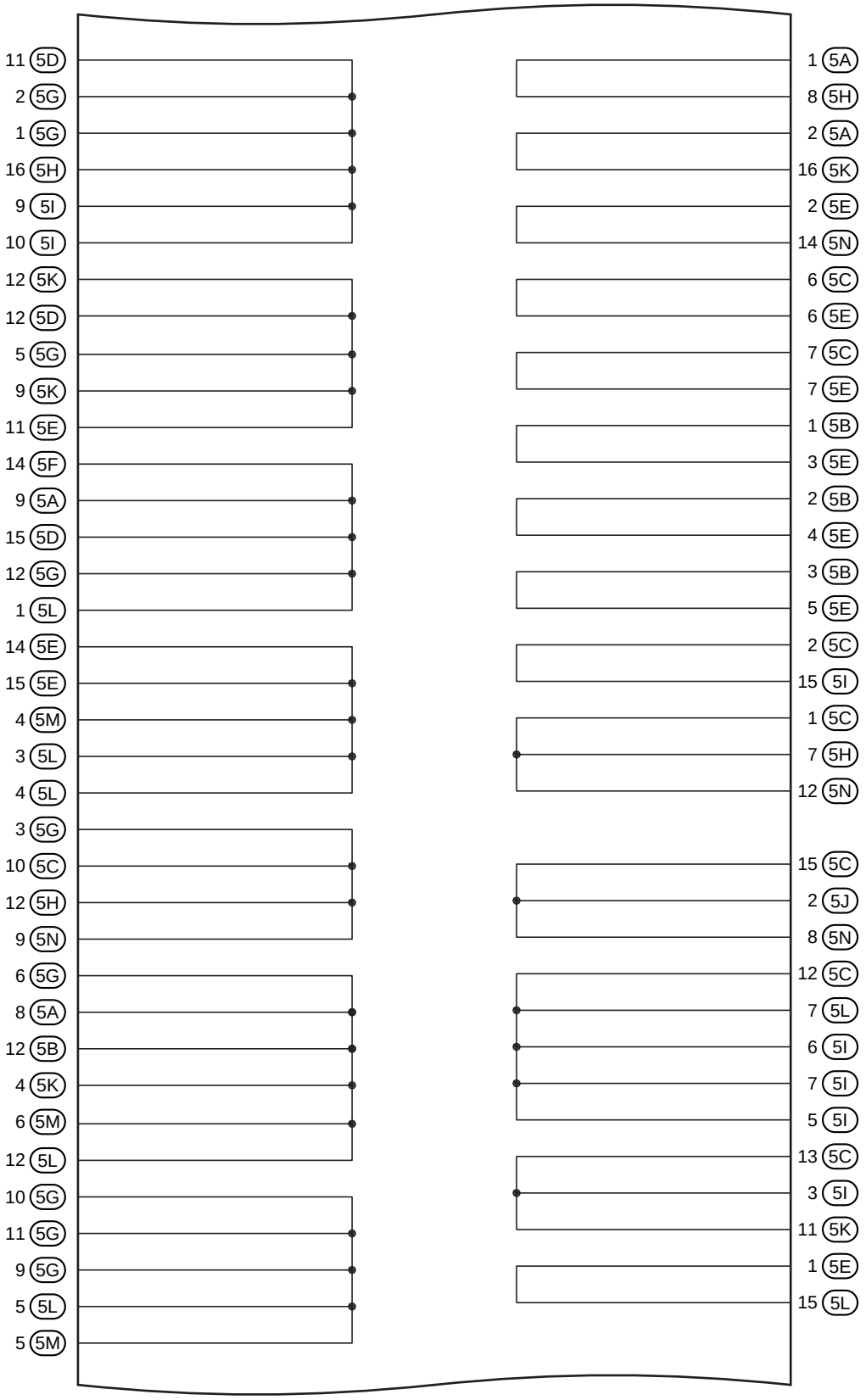

(Cont. Next Page)

(Cont'd)

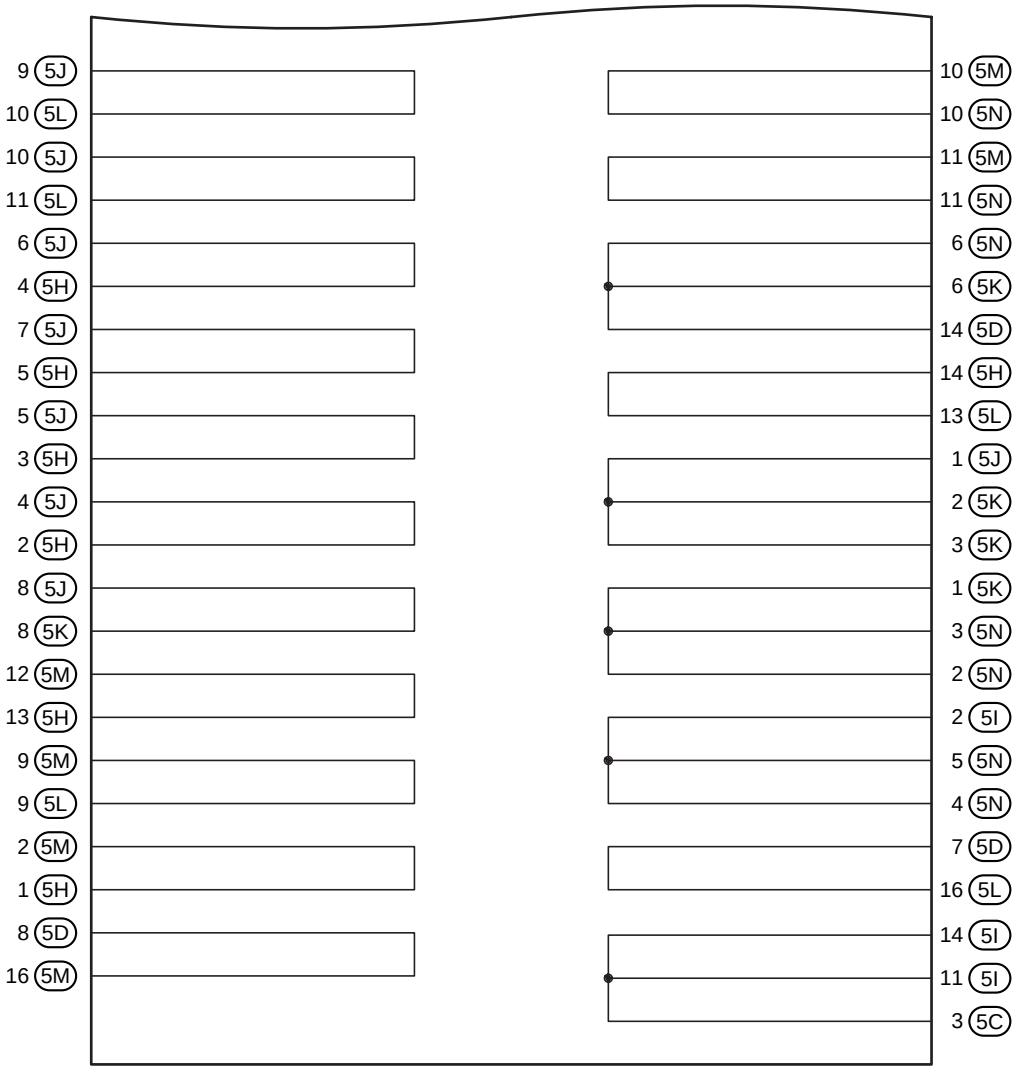
9 5J
10 5L
10 5J
11 5L
6 5J
4 5H
7 5J
5 5H
5 5J
3 5H
4 5J
2 5H
8 5J
8 5K
12 5M
13 5H
9 5M
9 5L
2 5M
1 5H
8 5D
16 5M
10 5M
10 5N
11 5M
11 5N
6 5N
6 5K
14 5D
14 5H
13 5L
1 5J
2 5K
3 5K
1 5K
3 5N
2 5N
2 5I
5 5N
4 5N
7 5D
16 5L
14 5I
11 5I
3 5C

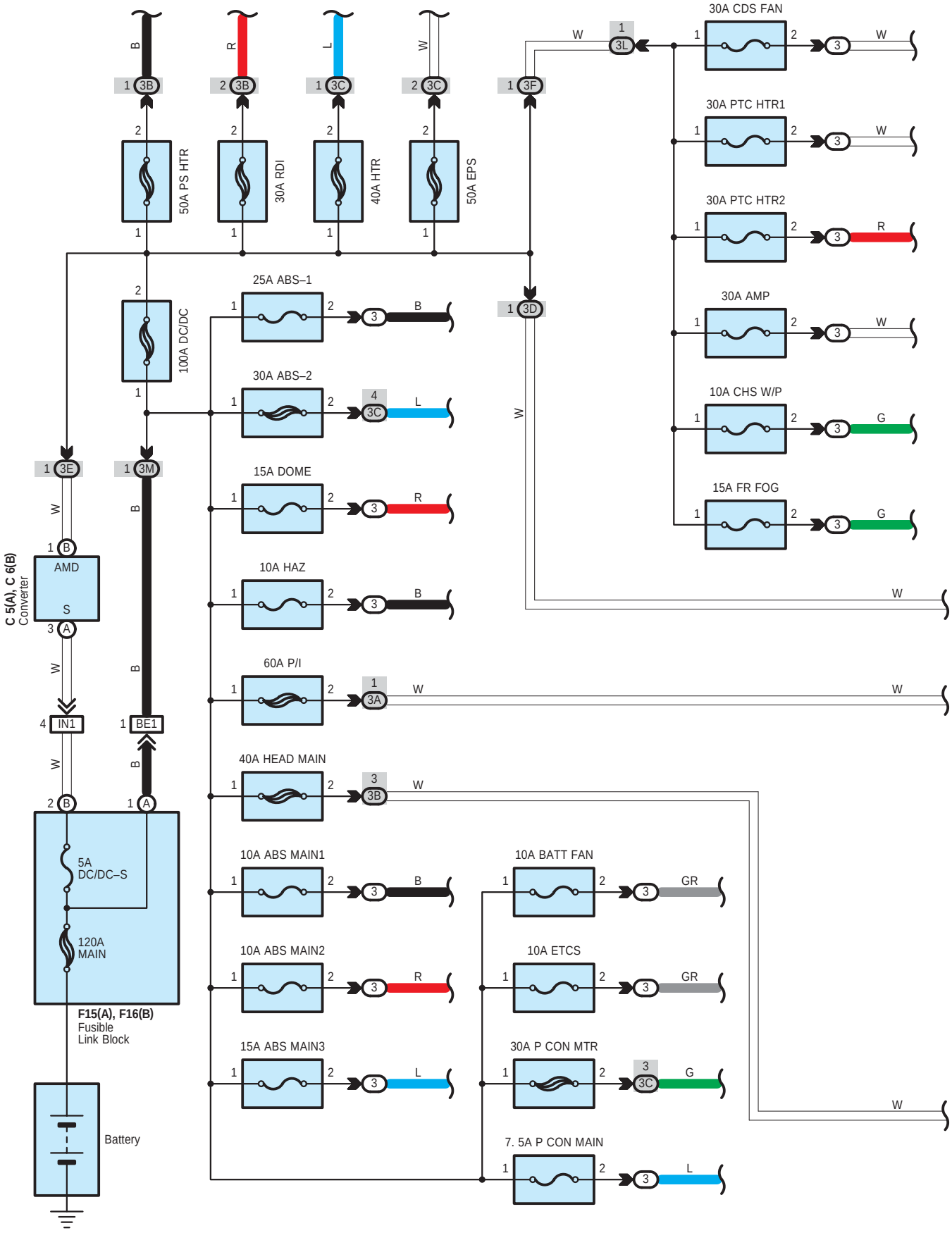
50A PS HTR
30A RDI
40A HTR
50A EPS
100A DC/DC
30A CDS FAN
30A PTC HTR1
30A PTC HTR2
30A AMP
10A CHS W/P
15A FR FOG
25A ABS–1
30A ABS–2
15A DOME
10A HAZ
60A P/I
40A HEAD MAIN
10A ABS MAIN1
10A ABS MAIN2
15A ABS MAIN3
10A BATT FAN
10A ETCS
30A P CON MTR
7. 5A P CON MAIN
C 5(A), C 6(B)
Converter
AMD
IN1
BE1
5A
DC/DC–S
120A
MAIN
F15(A), F16(B)
Fusible
Link Block
Battery

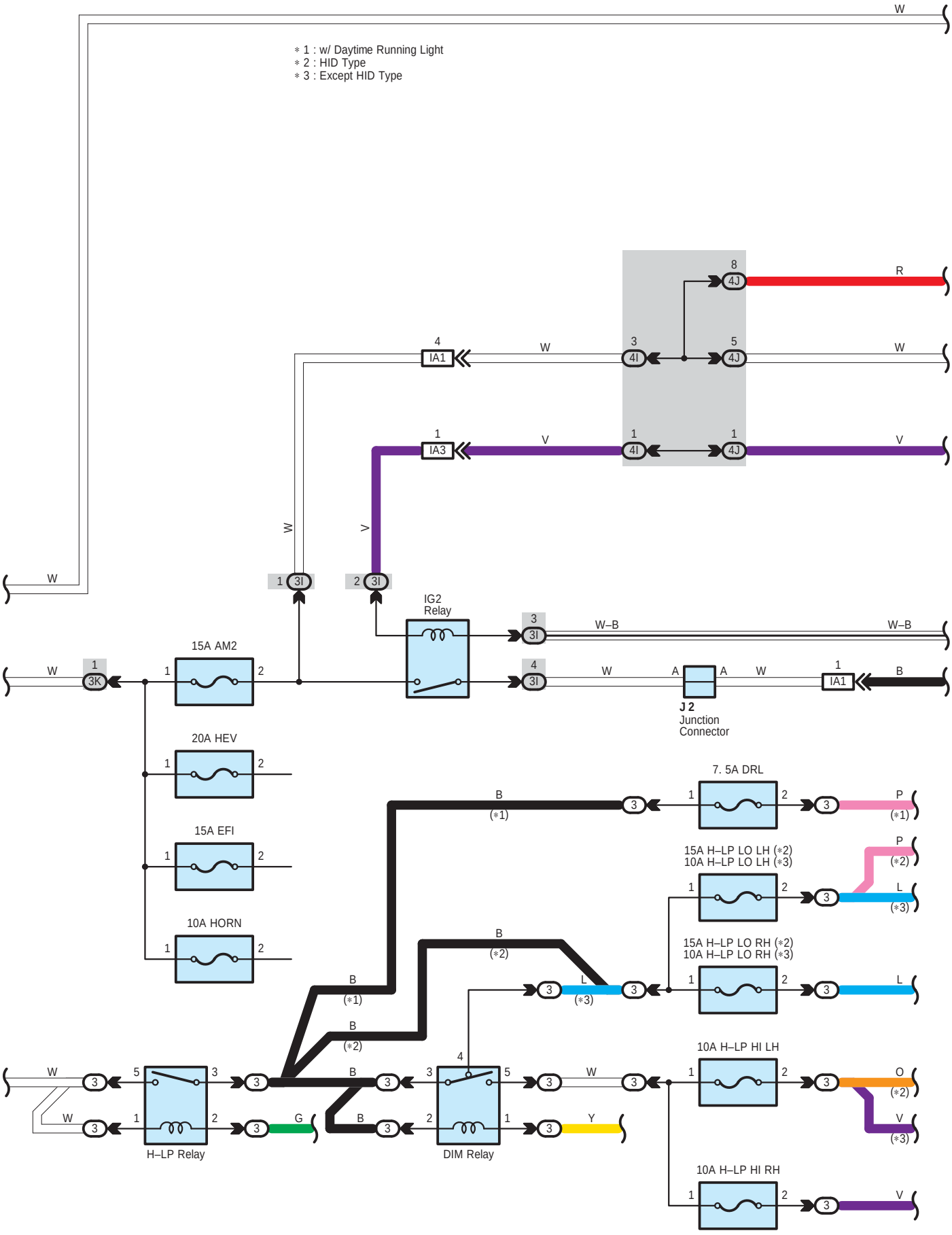
∗ 1 : w/ Daytime Running Light
∗ 2 : HID Type
∗ 3 : Except HID Type
W
R
W
V
IA1
IA3
4I
4J
3I
3K
IG2 Relay
15A AM2
20A HEV
15A EFI
10A HORN
W–B
J 2 Junction Connector
7. 5A DRL
15A H–LP LO LH (∗2)
10A H–LP LO LH (∗3)
15A H–LP LO RH (∗2)
10A H–LP LO RH (∗3)
10A H–LP HI LH
10A H–LP HI RH
H–LP Relay
DIM Relay
B
P
L
O
G
Y

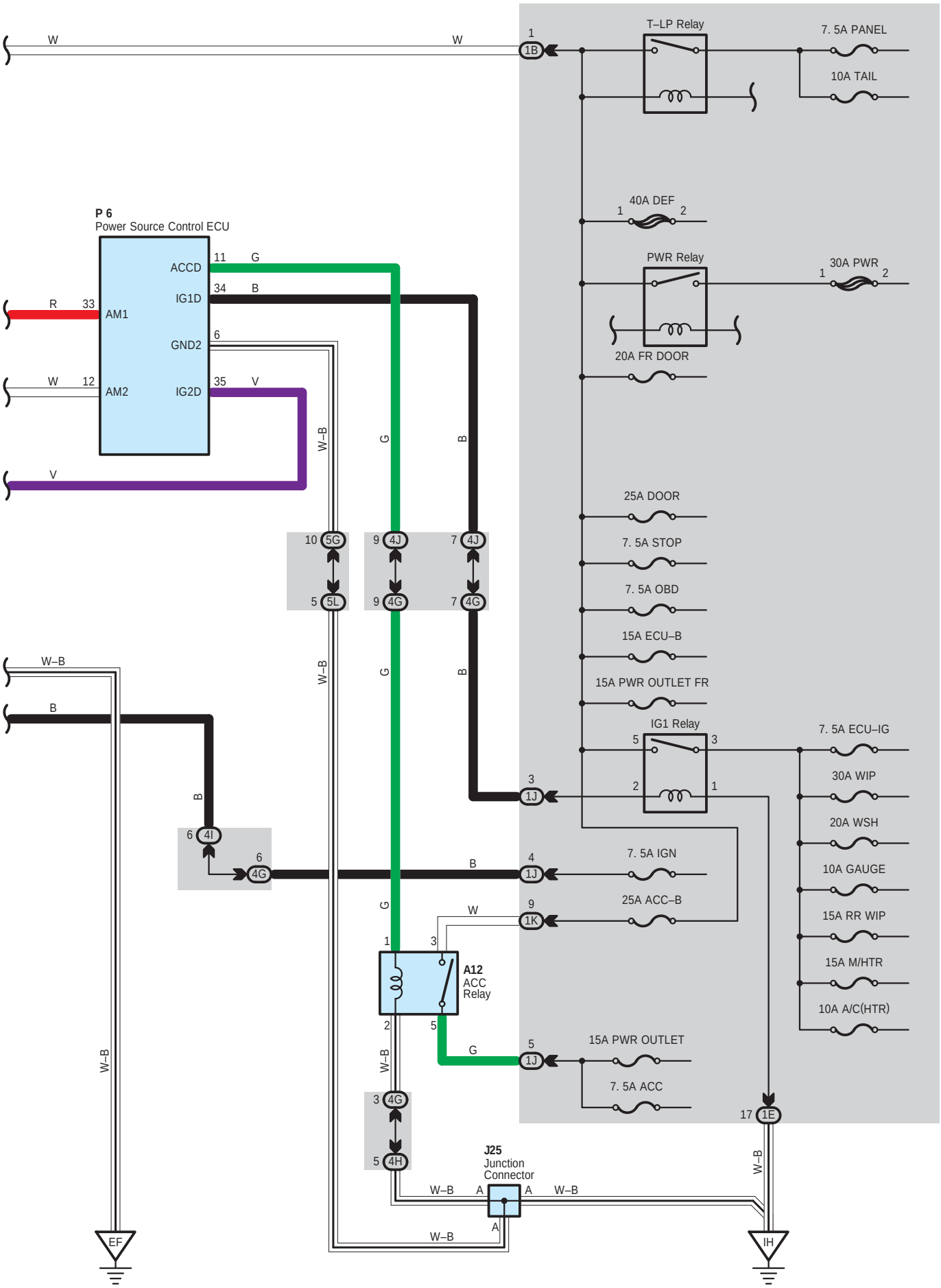
P 6
Power Source Control ECU
ACCD
IG1D
GND2
IG2D
AM1
AM2
T–LP Relay
7. 5A PANEL
10A TAIL
40A DEF
PWR Relay
30A PWR
20A FR DOOR
25A DOOR
7. 5A STOP
7. 5A OBD
15A ECU–B
15A PWR OUTLET FR
IG1 Relay
7. 5A ECU–IG
30A WIP
20A WSH
10A GAUGE
15A RR WIP
15A M/HTR
10A A/C(HTR)
7. 5A IGN
25A ACC–B
A12
ACC
Relay
15A PWR OUTLET
7. 5A ACC
J25
Junction
Connector
EF
IH

: Parts Location

Code		See Page	Code		See Page	Code	See Page
A12		48	F15	A	28, 53	J25	50
C5	A	46	F16	B	28, 53	P6	51
C6	B	46	J2		47		

: Relay Blocks

Code	See Page	Relay Blocks (Relay Block Location)
3	22	Engine Room R/B (Engine Compartment Left)

: Junction Block and Wire Harness Connector

Code	See Page	Junction Block and Wire Harness (Connector Location)
1B	30	Engine Room Main Wire and Driver Side J/B (Lower Finish Panel)
1E	30	Instrument Panel Wire and Driver Side J/B (Lower Finish Panel)
1J		
1K	31	
3A	23	Engine Room Main Wire and Engine Room J/B (Engine Compartment Left)
3B		
3C		
3D		
3E		
3F		
3I	24	
3K		
3L	22	
3M	23	Frame Wire and Engine Room J/B (Engine Compartment Left)
4G	38	Instrument Panel Wire and Center Connector No.1 (Behind the Combination Meter)
4H		
4I		
4J		
5G	42	Instrument Panel Wire and Center Connector No.2 (Instrument Panel Brace RH)
5L		

: Connector Joining Wire Harness and Wire Harness

Code	See Page	Joining Wire Harness and Wire Harness (Connector Location)
IA1	58	Engine Room Main Wire and Instrument Panel Wire (Upper Parts of Front Body Pillar LH)
IA3		
IN1	59	Floor No.2 Wire and Engine Room Main Wire (Right Kick Panel)
BE1	60	Frame Wire and Floor No.2 Wire (Front Side of Left Quarter Panel)

: Ground Points

Code	See Page	Ground Points Location
EF	56	Left Side of the Suspension Tower
IH	58	Cowl Side Panel LH

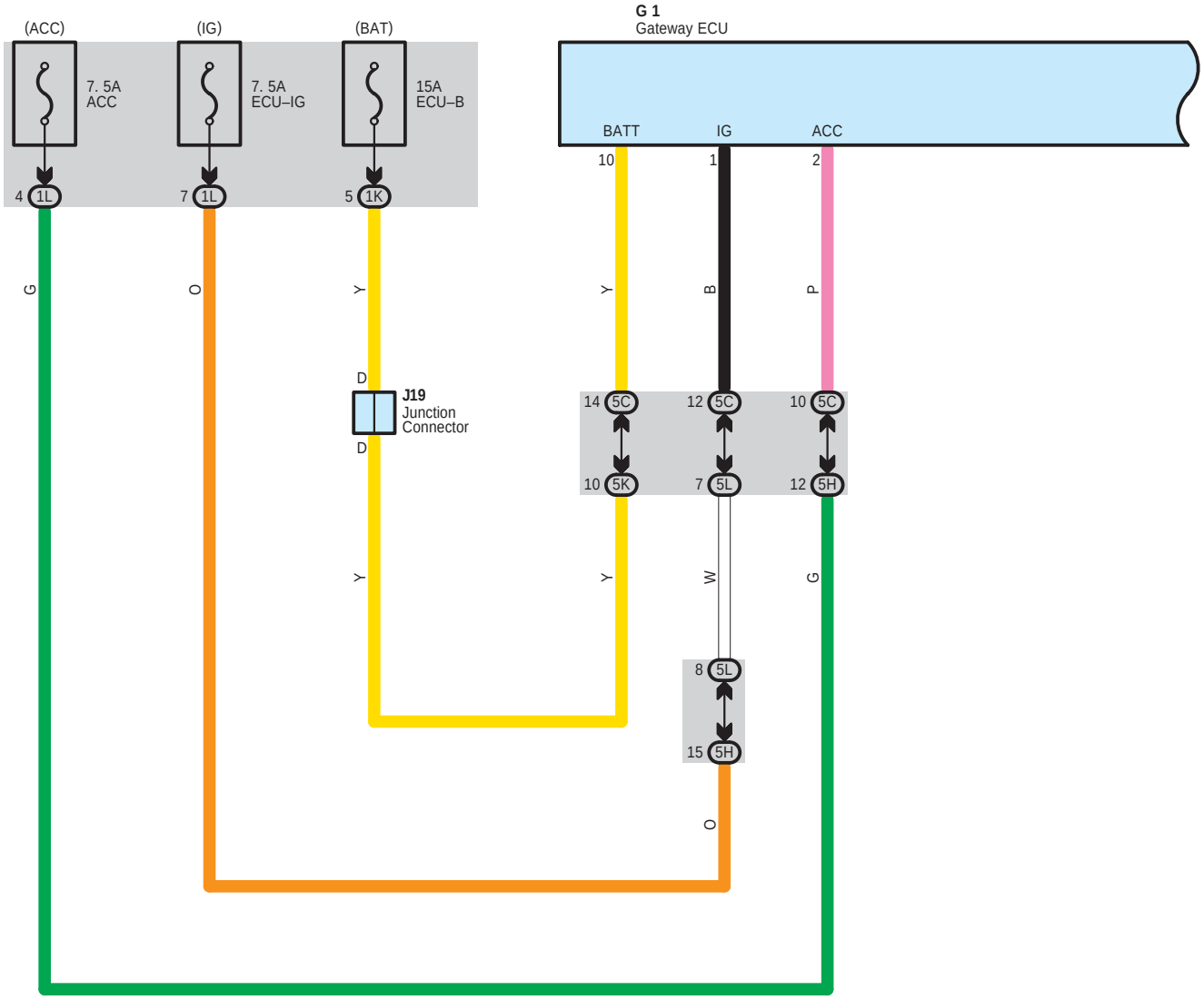
(ACC)
(IG)
(BAT)
7. 5A
ACC
7. 5A
ECU–IG
15A
ECU–B
4 1L
7 1L
5 1K
G
O
Y
D
J19
Junction
Connector
D
Y
Y
G 1
Gateway ECU
BATT
IG
ACC
10
1
2
Y
B
P
14 5C
12 5C
10 5C
10 5K
7 5L
12 5H
Y
W
G
8 5L
15 5H
O

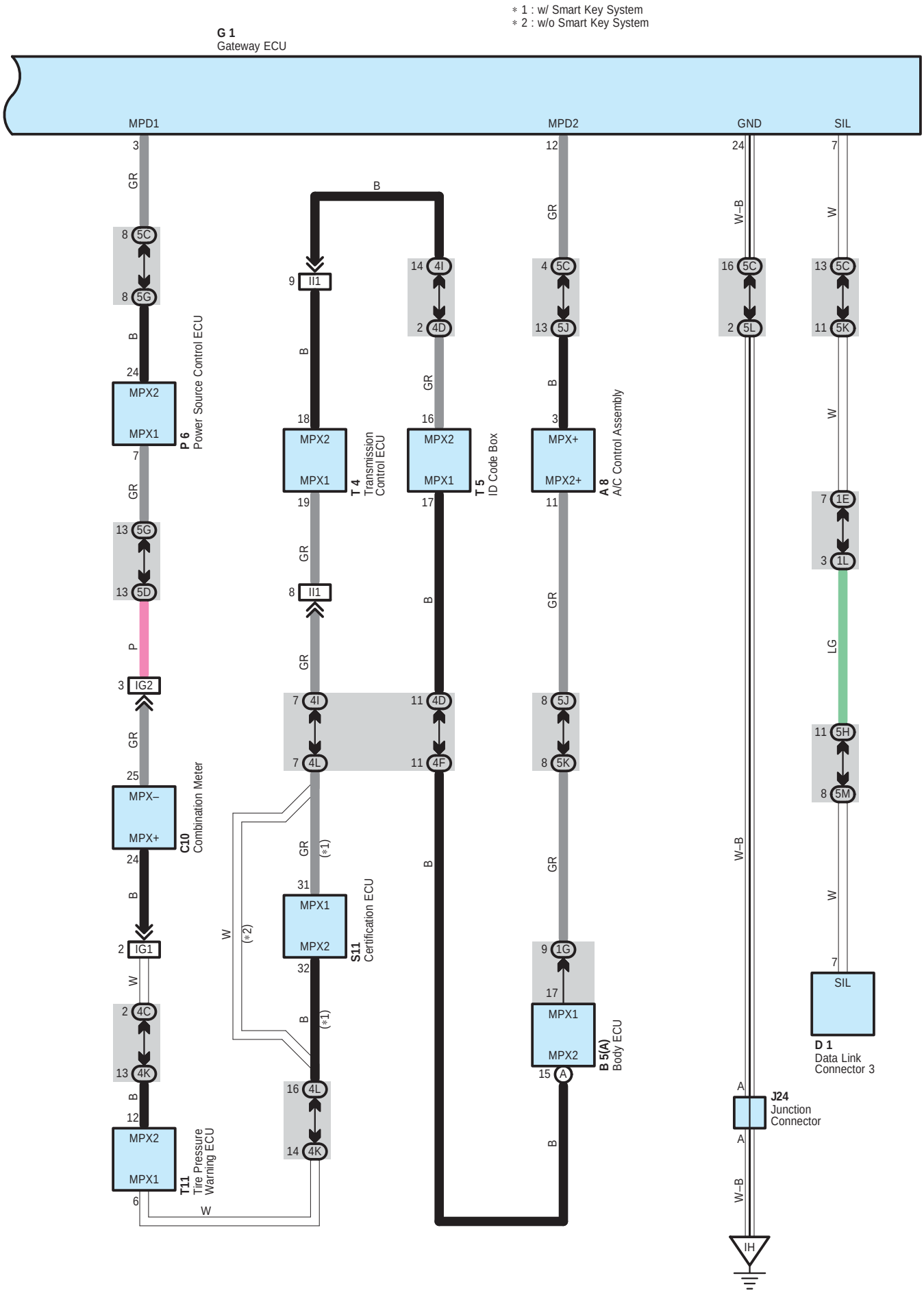
∗ 1 : w/ Smart Key System
∗ 2 : w/o Smart Key System
G 1
Gateway ECU
MPD1
MPD2
GND
SIL
P 6
Power Source Control ECU
T 4
Transmission Control ECU
T 5
ID Code Box
A 8
A/C Control Assembly
C10
Combination Meter
S11
Certification ECU
T11
Tire Pressure Warning ECU
B 5(A)
Body ECU
D 1
Data Link Connector 3
J24
Junction Connector
IH

System Outline

BEAN consists of body electrical systems such as body ECU, A/C control assembly, power source control ECU, combination meter, tire pressure warning ECU, certification ECU*, transmission control ECU, ID code box and gateway ECU. Gateway ECU has communication circuit to correspond with different types of communication data. Different types of communication data can be shared among communication parts after it goes through gateway ECU. Vehicle information is input to body ECU at an assembling plant as a representative ECU which delivers the information to other ECUs through multiplex communication.

* Optional equipment

This system is working for the following systems:

* ABS
* Air Conditioning
* Audio System
* Combination Meter
* Cruise Control
* Engine Control
* EPS
* Headlight
* Hybrid Vehicle Immobiliser System
* Illumination
* Interior Light
* Key Reminder
* Luggage Compartment Door Opener
* Mirror Heater
* Multi–Display
* Push Button Start System
* Rear Window Defogger
* Shift Control System
* Smart Key System
* Taillight
* Tire Pressure Warning System
* TOYOTA Hybrid System
* TRAC
* VSC

○ : Parts Location

Code	See Page	Code	See Page	Code	See Page
A8	48	G1	49	S11	51
B5 A	48	J19	50	T4	51
C10	49	J24	50	T5	51
D1	49	P6	51	T11	51

: **Junction Block and Wire Harness Connector**

Code	See Page	Junction Block and Wire Harness (Connector Location)
1E	30	Instrument Panel Wire and Driver Side J/B (Lower Finish Panel)
1G		
1K	31	
1L		
4C	38	Instrument Panel Wire and Center Connector No.1 (Behind the Combination Meter)
4D		
4F		
4I		
4K		
4L		
5C	42	Instrument Panel Wire and Center Connector No.2 (Instrument Panel Brace RH)
5D		
5G		
5H		
5J		
5K		
5L		
5M		

: **Connector Joining Wire Harness and Wire Harness**

Code	See Page	Joining Wire Harness and Wire Harness (Connector Location)
IG1	59	Instrument Panel Wire and Instrument Panel No.2 Wire (Behind the Combination Meter)
IG2		
II1	59	Engine Wire and Instrument Panel Wire (Behind the Glove Box)

: **Ground Points**

Code	See Page	Ground Points Location
IH	58	Cowl Side Panel LH

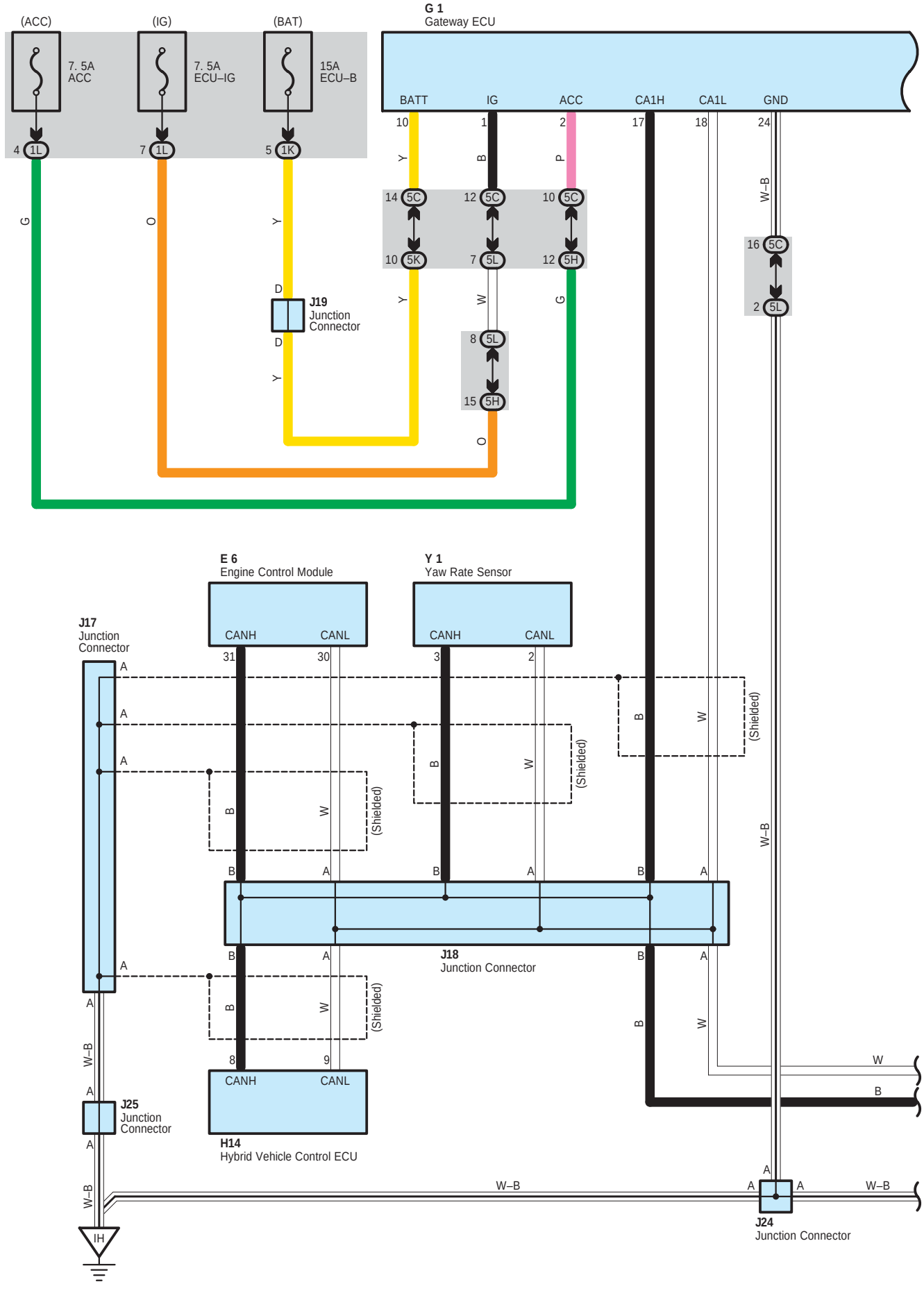
(ACC)
(IG)
(BAT)
7. 5A
ACC
7. 5A
ECU–IG
15A
ECU–B
4 1L
7 1L
5 1K
G 1
Gateway ECU
BATT
IG
ACC
CA1H
CA1L
GND
10
1
2
17
18
24
14 5C
12 5C
10 5C
10 5K
7 5L
12 5H
16 5C
2 5L
8 5L
15 5H
J19
Junction
Connector
E 6
Engine Control Module
Y 1
Yaw Rate Sensor
CANH
CANL
J17
Junction
Connector
31
30
3
2
(Shielded)
J18
Junction Connector
J25
Junction
Connector
H14
Hybrid Vehicle Control ECU
8
9
W–B
J24
Junction Connector
IH

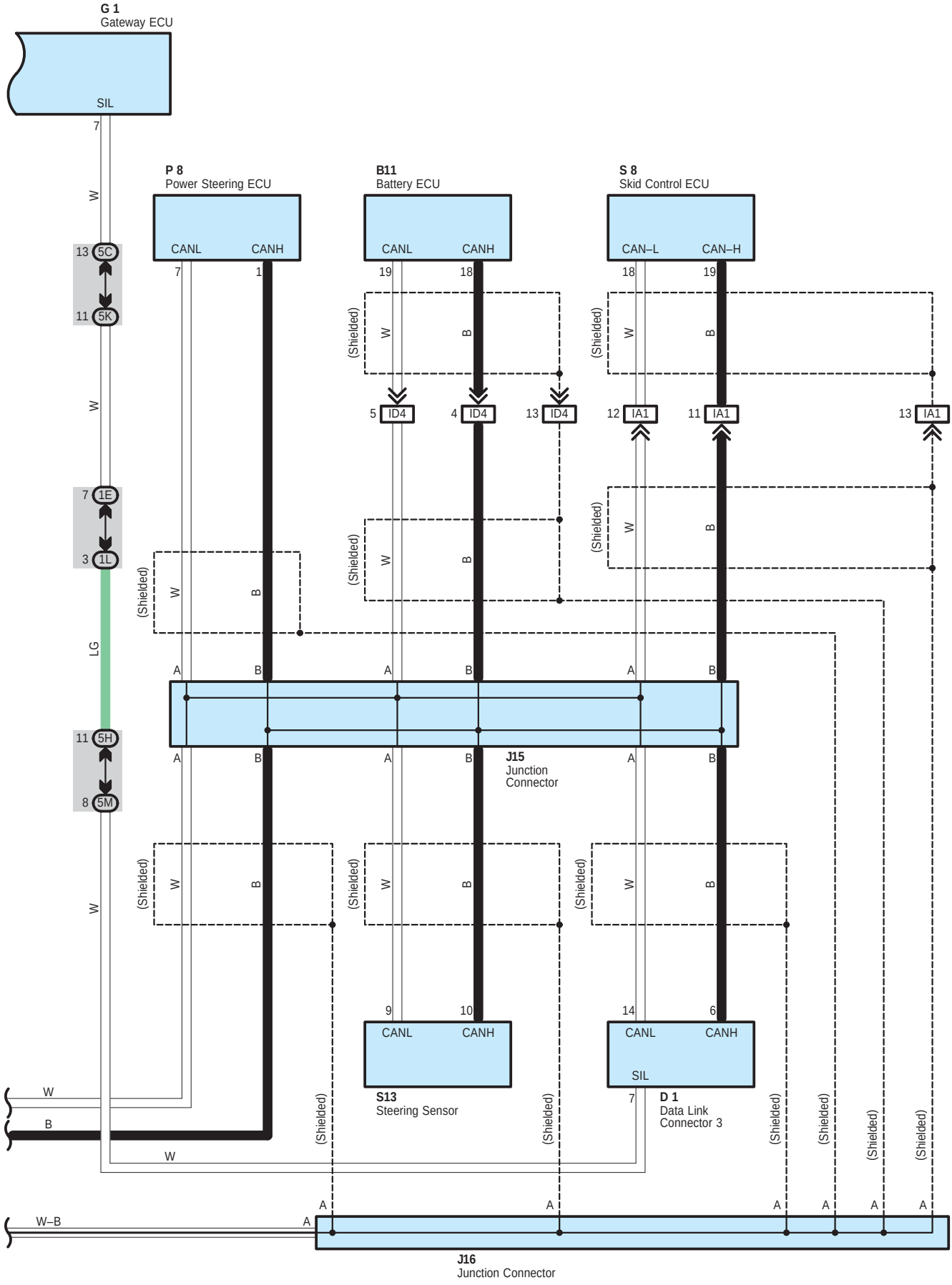
G 1
Gateway ECU
SIL
7
W
13 5C
11 5K
W
7 1E
3 1L
LG
11 5H
8 5M
W
P 8
Power Steering ECU
CANL
CANH
7
1
B11
Battery ECU
CANL
CANH
19
18
S 8
Skid Control ECU
CAN–L
CAN–H
18
19
(Shielded)
W
B
5 ID4
4 ID4
13 ID4
12 IA1
11 IA1
13 IA1
A
B
J15
Junction
Connector
9
10
CANL
CANH
S13
Steering Sensor
14
6
CANL
CANH
SIL
7
D 1
Data Link
Connector 3
W
B
W
W–B
J16
Junction Connector

System Outline

CAN has two lines as a pair which make communication with operating voltage. CAN has excellent data speed and error detecting capacity. It consists of vehicle control systems such as hybrid vehicle control ECU, engine control module, yaw rate sensor, battery ECU, power steering ECU, skid control ECU, steering sensor, data link connector 3 and gateway ECU. Gateway ECU has communication circuit to correspond with different types of communication data. Different types of communication data can be shared among communication parts after it goes through gateway ECU.

This system is working for the following systems:

* ABS
* Air Conditioning
* Audio System
* Back–Up Light
* Combination Meter
* Cruise Control
* Engine Control
* EPS
* Headlight
* Hybrid Vehicle Immobiliser System
* Multi–Display
* Push Button Start System
* Shift Control System
* Smart Key System
* Theft Deterrent
* TOYOTA Hybrid System
* TRAC
* VSC

: Parts Location

Code	See Page	Code	See Page	Code	See Page
B11	52	J16	50	P8	51
D1	49	J17	50	S8	51
E6	49	J18	50	S13	51
G1	49	J19	50	Y1	51
H14	49	J24	50		
J15	50	J25	50		

: Junction Block and Wire Harness Connector

Code	See Page	Junction Block and Wire Harness (Connector Location)
1E	30	Instrument Panel Wire and Driver Side J/B (Lower Finish Panel)
1K	31	
1L		
5C	42	Instrument Panel Wire and Center Connector No.2 (Instrument Panel Brace RH)
5H		
5K		
5L		
5M		

: Connector Joining Wire Harness and Wire Harness

Code	See Page	Joining Wire Harness and Wire Harness (Connector Location)
IA1	58	Engine Room Main Wire and Instrument Panel Wire (Upper Parts of Front Body Pillar LH)
ID4	58	Instrument Panel Wire and Floor Wire (Left Kick Panel)

: Ground Points

Code	See Page	Ground Points Location
IH	58	Cowl Side Panel LH

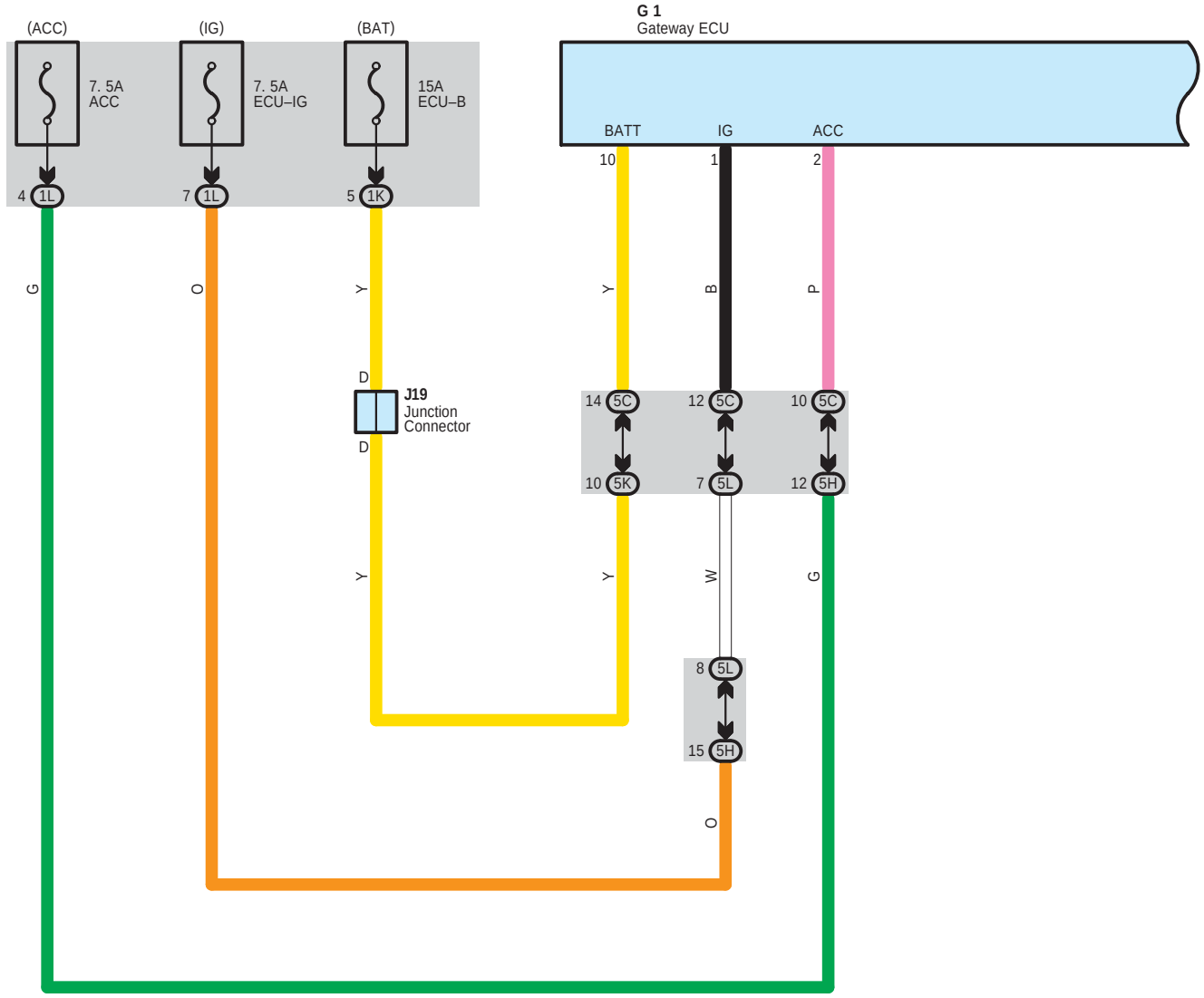

* 1 : w/ Navigation System
* 2 : w/ Separate Amplifier
* 3 : w/ Television Camera
* 4 : w/o Television Camera

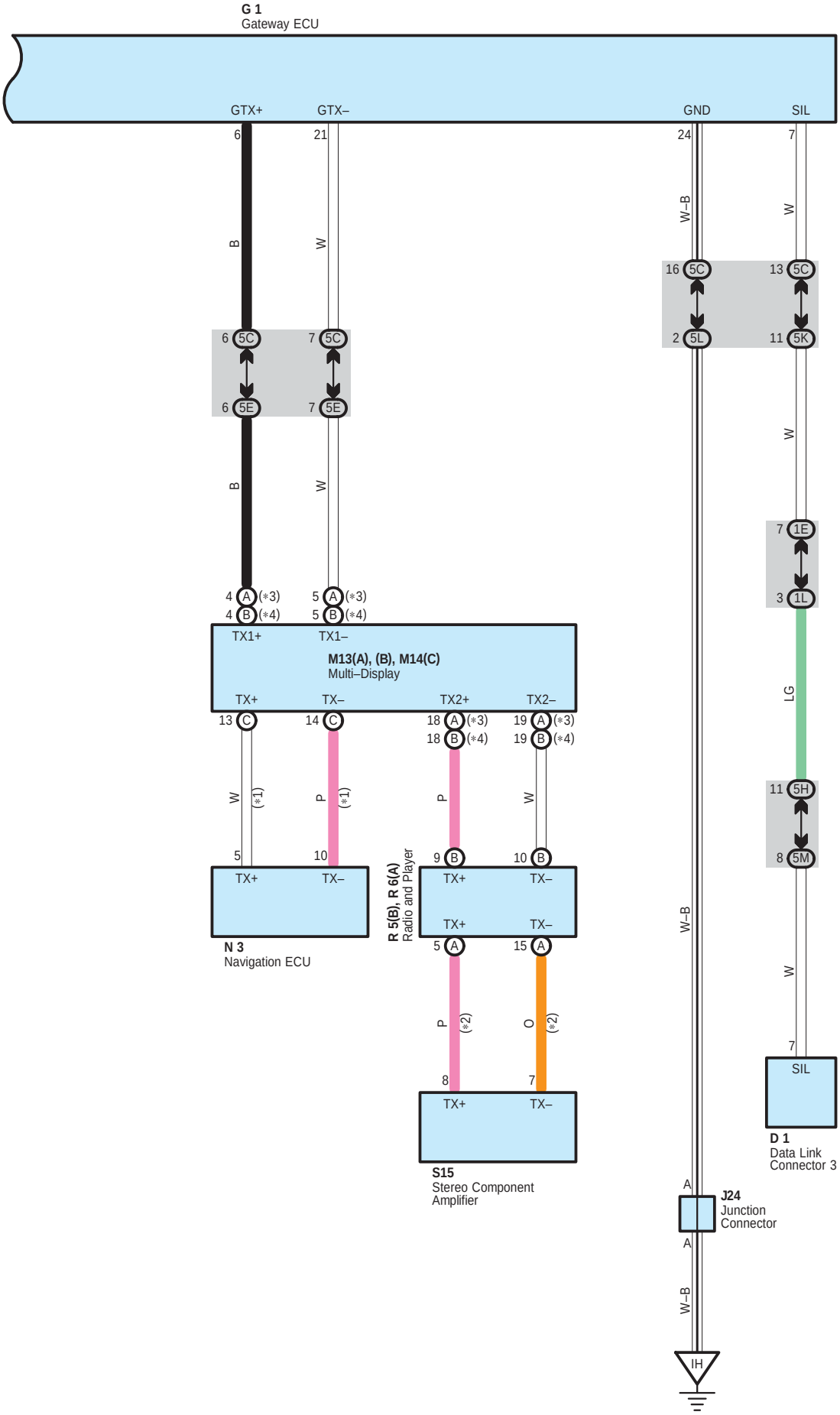
G 1
Gateway ECU
GTX+
GTX–
GND
SIL
6
21
24
7
B
W
W–B
W
16 5C
2 5L
13 5C
11 5K
6 5C
7 5C
6 5E
7 5E
B
W
W
7 1E
3 1L
4 A (*3)
4 B (*4)
5 A (*3)
5 B (*4)
TX1+
TX1–
M13(A), (B), M14(C)
Multi–Display
LG
11 5H
8 5M
TX+
TX–
TX2+
TX2–
13 C
14 C
18 A (*3)
18 B (*4)
19 A (*3)
19 B (*4)
W
(*1)
P
(*1)
P
W
5
10
9 B
10 B
TX+
TX–
TX+
TX–
R 5(B), R 6(A)
Radio and Player
N 3
Navigation ECU
5 A
15 A
P
(*2)
O
(*2)
8
7
TX+
TX–
S15
Stereo Component
Amplifier
W
7
SIL
D 1
Data Link
Connector 3
A
J24
Junction
Connector
A
W–B
IH

Multiplex Communication System – AVC–LAN Bus

System Outline

AVC–LAN consists of audio visual systems such as multi–display, navigation ECU*, radio and player, stereo component amplifier* and gateway ECU. Gateway ECU has communication circuit to correspond with different types of communication data. Different types of communication data can be shared among communication parts after it goes through gateway ECU.

* Optional equipment

This system is working for the following systems:

* ABS
* Air Conditioning
* Audio System
* Combination Meter
* Engine Control
* EPS
* Hybrid Vehicle Immobiliser System
* Mirror Heater
* Multi–Display
* Push Button Start System
* Rear Wiper and Washer
* Shift Control System
* TOYOTA Hybrid System
* TRAC
* VSC

: Parts Location

Code	See Page	Code		See Page	Code		See Page
D1	49	M13	A	50	R5	B	51
G1	49		B	50	R6	A	51
J19	50	M14	C	50	S15		51
J24	50	N3		50			

: Junction Block and Wire Harness Connector

Code	See Page	Junction Block and Wire Harness (Connector Location)
1E	30	Instrument Panel Wire and Driver Side J/B (Lower Finish Panel)
1K	31	
1L		
5C	42	Instrument Panel Wire and Center Connector No.2 (Instrument Panel Brace RH)
5E		
5H		
5K		
5L		
5M		

: Ground Points

Code	See Page	Ground Points Location
IH	58	Cowl Side Panel LH

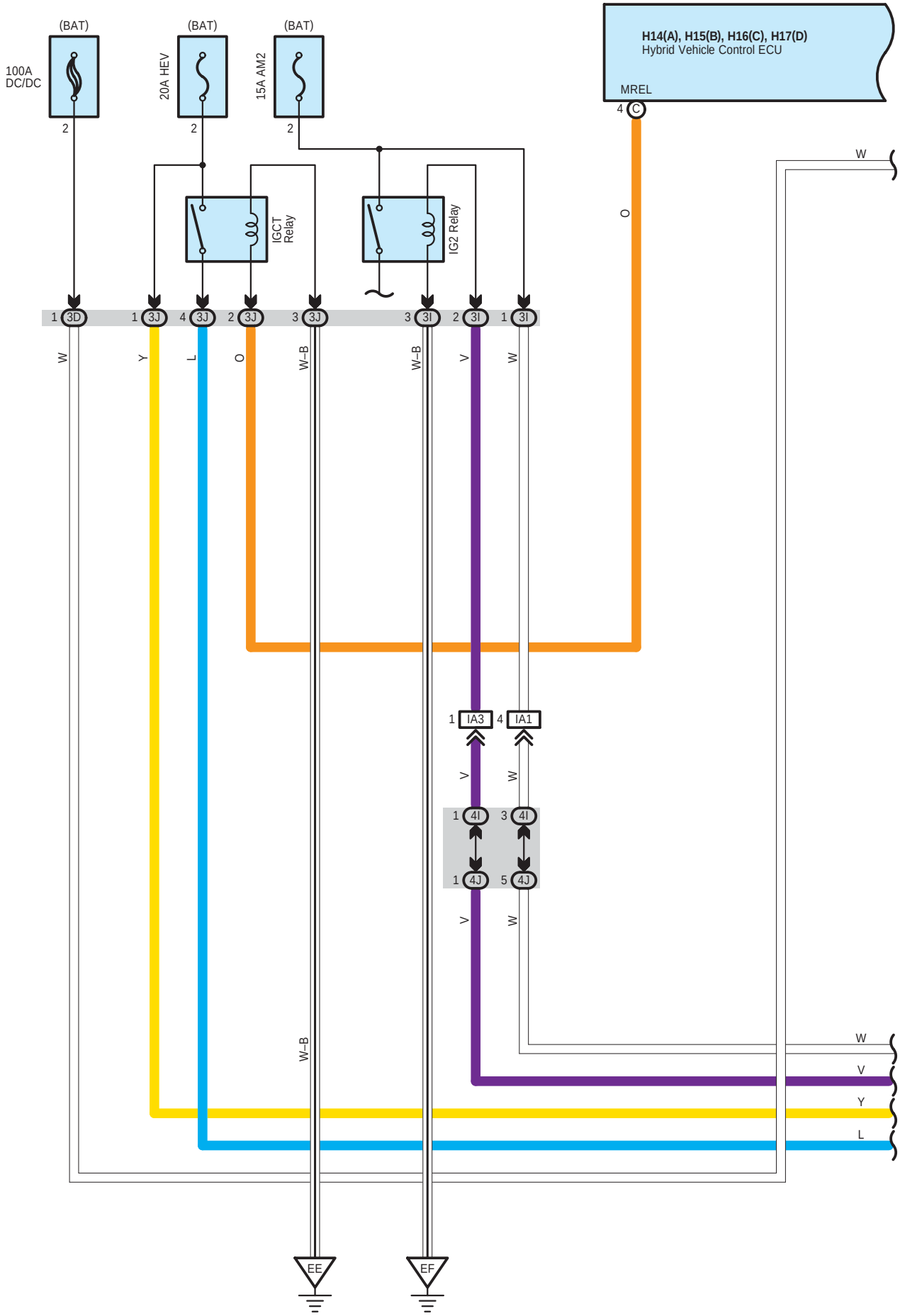
(BAT)
100A
DC/DC
2
(BAT)
20A HEV
2
(BAT)
15A AM2
2
IGCT
Relay
IG2 Relay
H14(A), H15(B), H16(C), H17(D)
Hybrid Vehicle Control ECU
MREL
4 C
O
W
1 3D
W
1 3J
Y
4 3J
L
2 3J
O
3 3J
W–B
3 3I
W–B
2 3I
V
1 3I
W
1 IA3
4 IA1
V
W
1 4I
3 4I
1 4J
5 4J
V
W
W–B
W
V
Y
L
EE
EF

H14(A), H15(B), H16(C), H17(D)
Hybrid Vehicle Control ECU

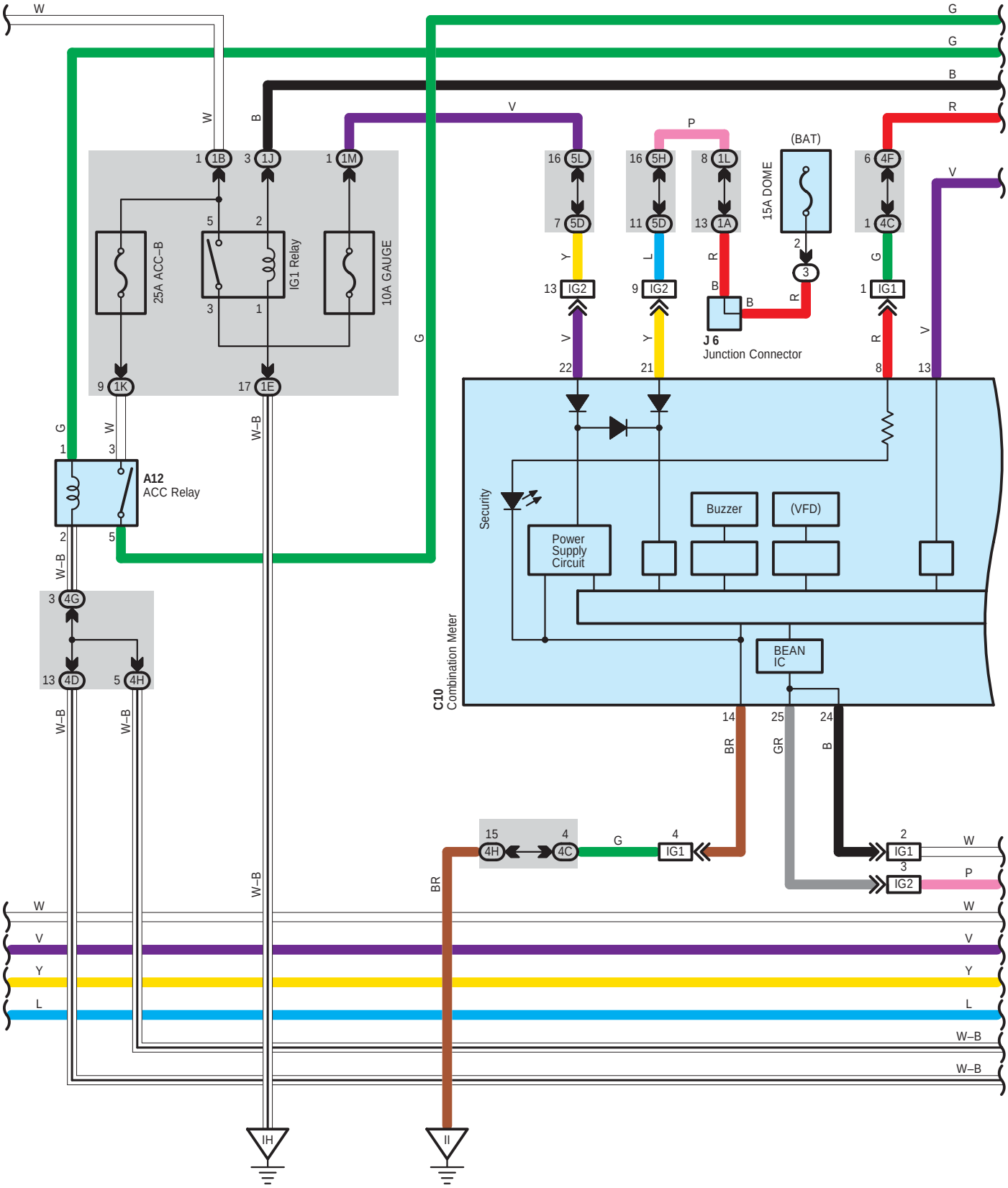

H14(A), H15(B), H16(C), H17(D)
Hybrid Vehicle Control ECU

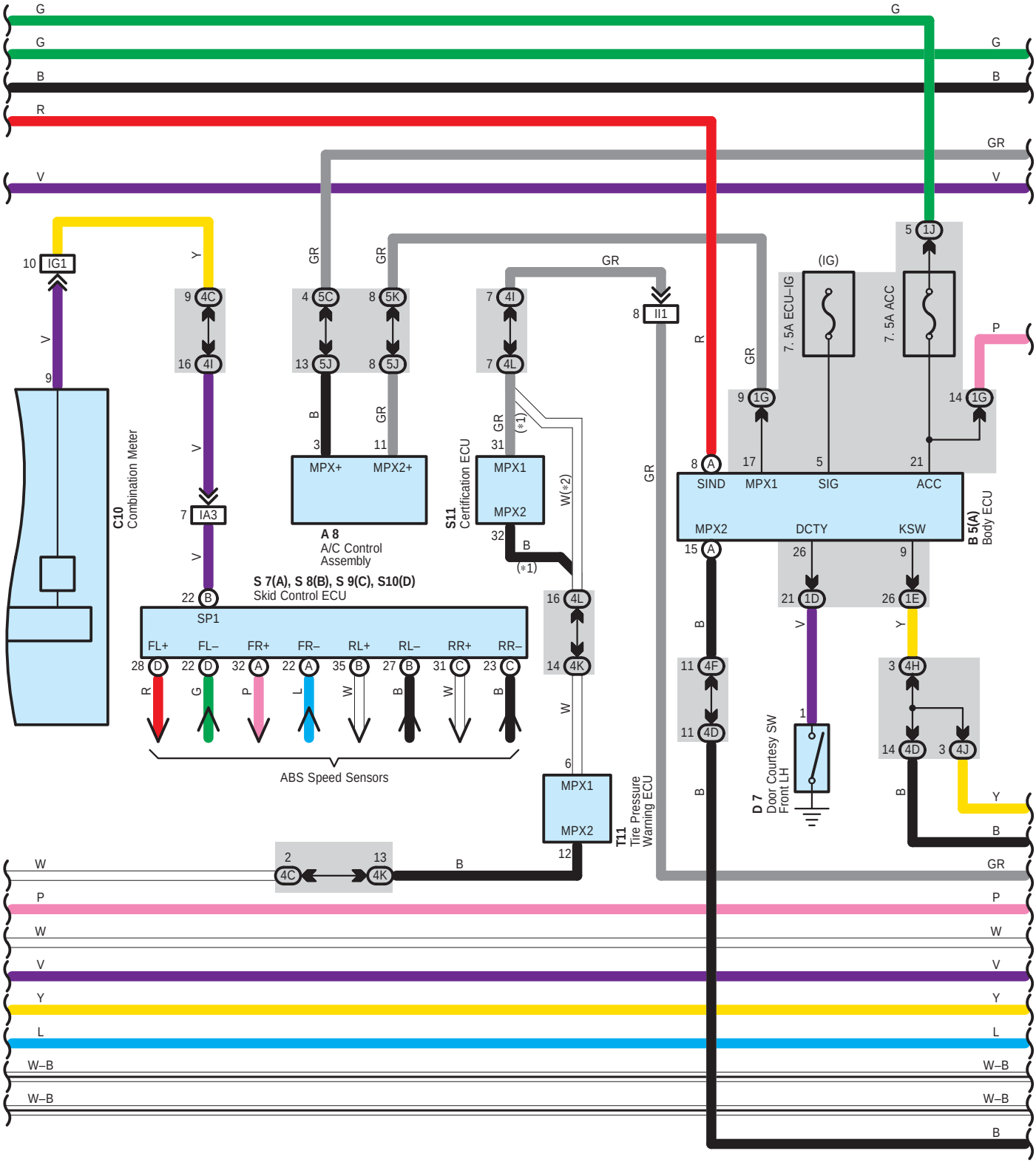

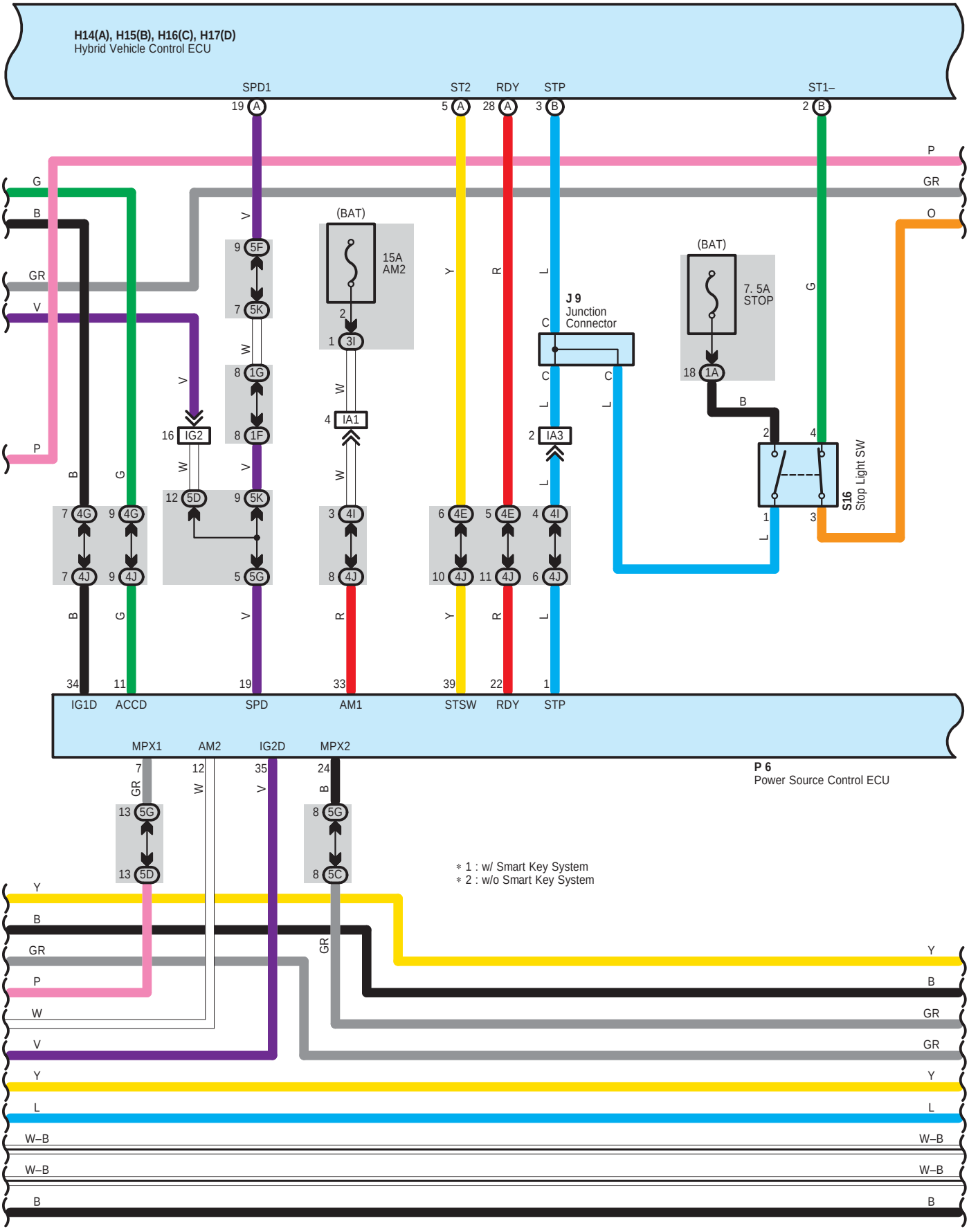
H14(A), H15(B), H16(C), H17(D)
Hybrid Vehicle Control ECU
SPD1
ST2
RDY
STP
ST1–
19 A
5 A
28 A
3 B
2 B
P
GR
G
B
GR
V
O
(BAT)
15A
AM2
9 5F
7 5K
W
8 1G
8 1F
V
2
1 3I
W
4 IA1
W
3 4I
8 4J
R
33
(BAT)
7. 5A
STOP
18 1A
B
J 9
Junction
Connector
C
C
L
2 IA3
L
6 4E
5 4E
4 4I
10 4J
11 4J
6 4J
Y
R
L
39
22
1
G
2
4
1
3
S16
Stop Light SW
L
16 IG2
W
12 5D
9 5K
5 5G
V
19
7 4G
9 4G
7 4J
9 4J
B
G
34
11
IG1D
ACCD
SPD
AM1
STSW
RDY
STP
MPX1
AM2
IG2D
MPX2
7
12
35
24
GR
W
V
B
13 5G
13 5D
8 5G
8 5C
GR
P 6
Power Source Control ECU
∗ 1 : w/ Smart Key System
∗ 2 : w/o Smart Key System
Y
B
GR
P
W
V
Y
L
W–B
W–B
B
Y
B
GR
GR
Y
L
W–B
W–B
B

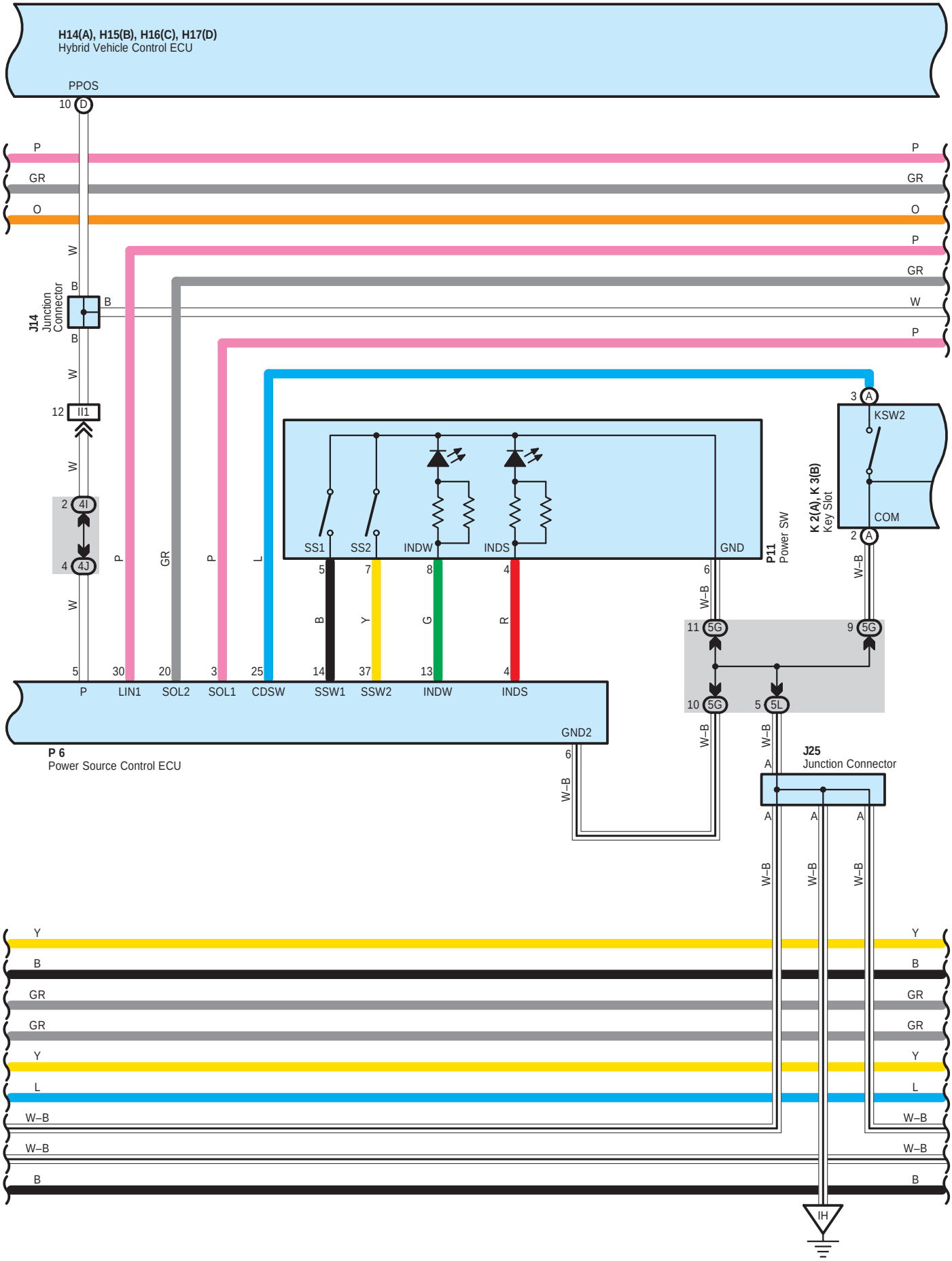
H14(A), H15(B), H16(C), H17(D)
Hybrid Vehicle Control ECU
PPOS
10 D
P
GR
O
W
B
J14
Junction Connector
B
W
12 I11
W
2 4I
4 4J
W
5
P
30
LIN1
20
SOL2
3
SOL1
25
CDSW
14
SSW1
37
SSW2
13
INDW
4
INDS
GND2
6
W–B
P 6
Power Source Control ECU
SS1
SS2
INDW
INDS
GND
5
B
7
Y
8
G
4
R
6
W–B
P11
Power SW
3 A
KSW2
COM
2 A
K 2(A), K 3(B)
Key Slot
W–B
11 5G
9 5G
10 5G
5 5L
W–B
W–B
J25
Junction Connector
A
A
A
A
W–B
W–B
W–B
Y
B
GR
GR
Y
L
W–B
W–B
B
IH

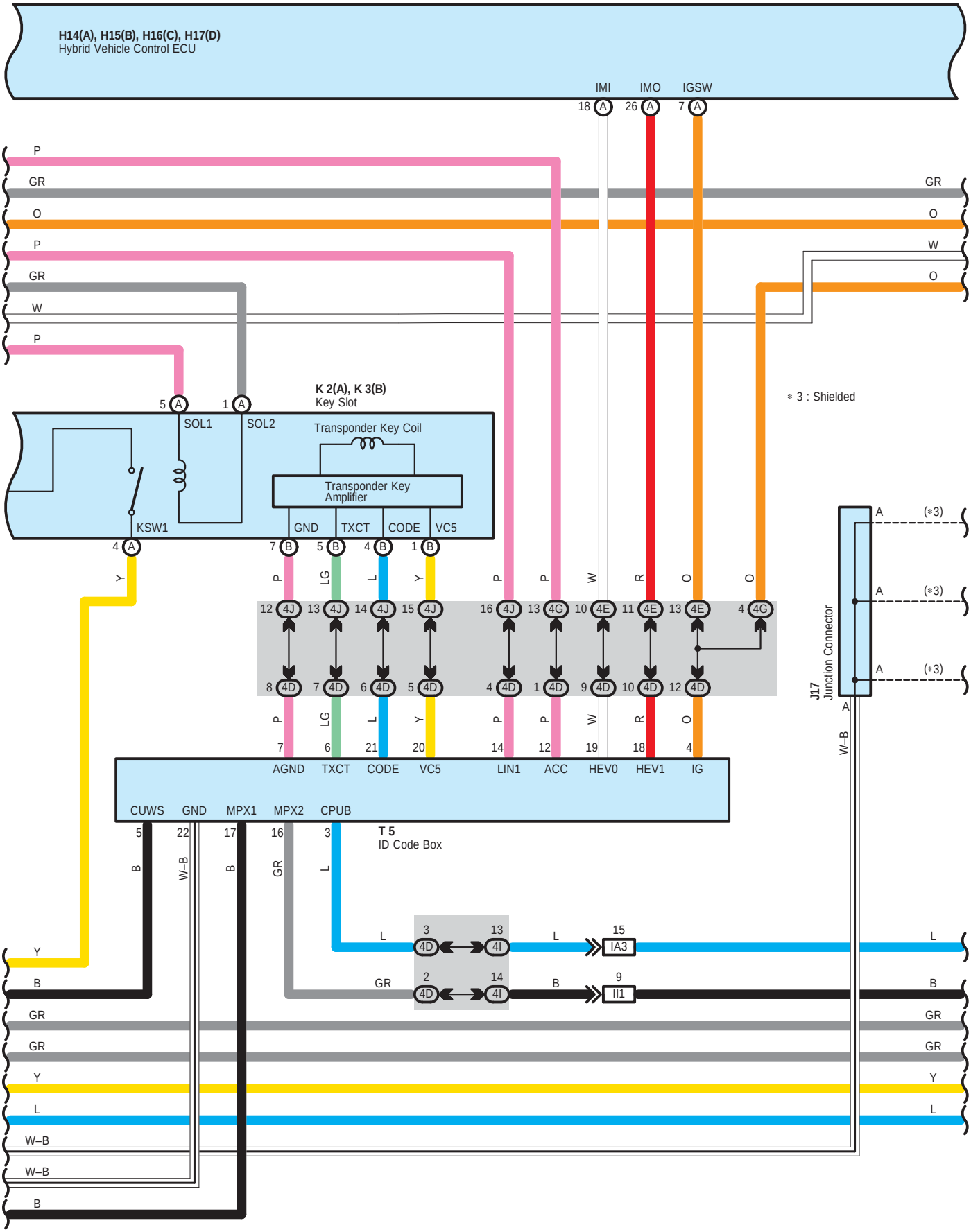
H14(A), H15(B), H16(C), H17(D)
Hybrid Vehicle Control ECU
IMI
IMO
IGSW
18 A
26 A
7 A
P
GR
O
P
GR
W
P
GR
O
W
O
K 2(A), K 3(B)
Key Slot
5 A
1 A
SOL1
SOL2
Transponder Key Coil
Transponder Key Amplifier
KSW1
GND
TXCT
CODE
VC5
＊3 : Shielded
4 A
7 B
5 B
4 B
1 B
Y
P
LG
L
Y
P
P
W
R
O
O
12 4J
13 4J
14 4J
15 4J
16 4J
13 4G
10 4E
11 4E
13 4E
4 4G
8 4D
7 4D
6 4D
5 4D
4 4D
1 4D
9 4D
10 4D
12 4D
P
LG
L
Y
P
P
W
R
O
7
6
21
20
14
12
19
18
4
AGND
TXCT
CODE
VC5
LIN1
ACC
HEV0
HEV1
IG
J17
Junction Connector
A
(＊3)
A
(＊3)
A
(＊3)
A
W–B
CUWS
GND
MPX1
MPX2
CPUB
5
22
17
16
3
B
W–B
B
GR
L
T 5
ID Code Box
L
3 4D
13 4I
L
15
IA3
GR
2 4D
14 4I
B
9
II1
Y
B
GR
GR
Y
L
W–B
W–B
B
GR
GR
Y
L

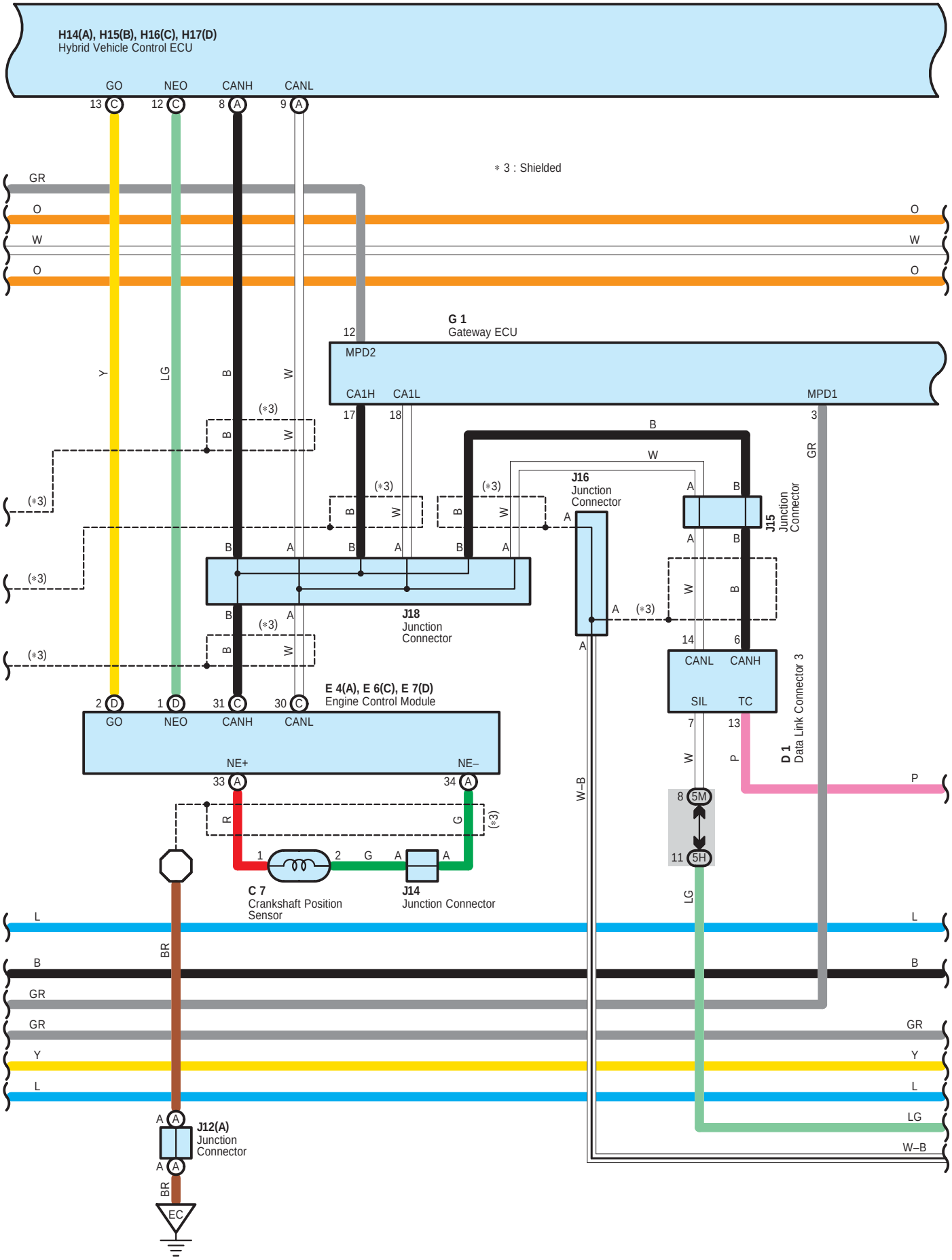
H14(A), H15(B), H16(C), H17(D)
Hybrid Vehicle Control ECU
GO
NEO
CANH
CANL
13 C
12 C
8 A
9 A
∗ 3 : Shielded
GR
O
W
O
O
W
O
G 1
Gateway ECU
12
MPD2
CA1H
CA1L
MPD1
17
18
3
(∗3)
B
W
Y
LG
J16
Junction
Connector
J15
Junction
Connector
J18
Junction
Connector
14
6
CANL
CANH
SIL
TC
7
13
D 1
Data Link Connector 3
E 4(A), E 6(C), E 7(D)
Engine Control Module
2 D
1 D
31 C
30 C
GO
NEO
CANH
CANL
NE+
NE–
33 A
34 A
R
G
1
2
G
A
A
C 7
Crankshaft Position
Sensor
J14
Junction Connector
W–B
P
8 5M
11 5H
LG
L
BR
B
GR
GR
Y
L
L
B
GR
GR
Y
L
LG
W–B
A A
J12(A)
Junction
Connector
A A
BR
EC

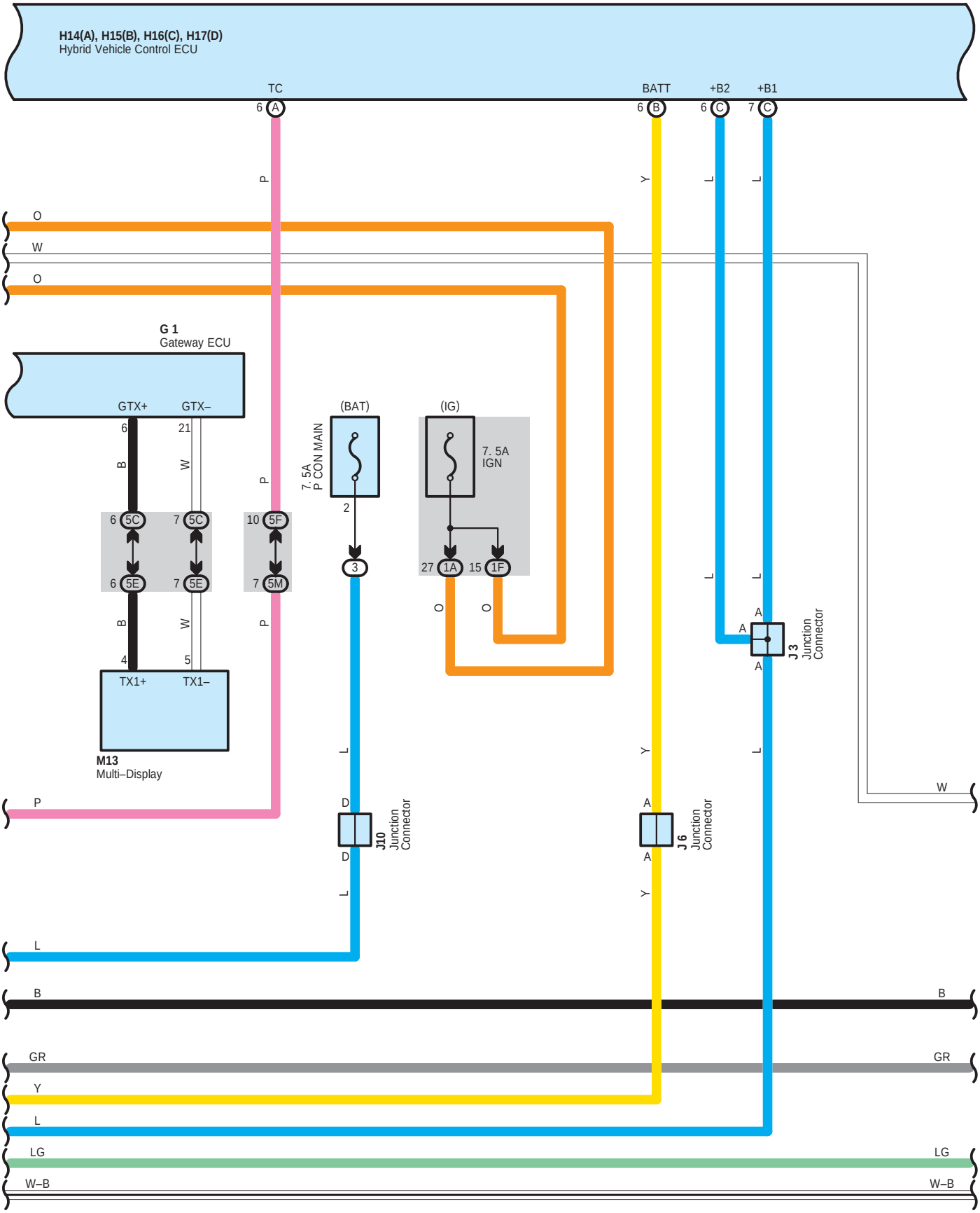
H14(A), H15(B), H16(C), H17(D)
Hybrid Vehicle Control ECU
TC
6 A
BATT
6 B
+B2
6 C
+B1
7 C
P
Y
L
L
O
W
O
G 1
Gateway ECU
GTX+
GTX–
6
21
B
W
6 5C
7 5C
10 5F
6 5E
7 5E
7 5M
B
W
P
4
5
TX1+
TX1–
M13
Multi–Display
(BAT)
7. 5A
P CON MAIN
2
3
(IG)
7. 5A
IGN
27 1A
15 1F
O
O
A
A
J3
Junction
Connector
A
W
P
D
D
J10
Junction
Connector
L
A
A
J6
Junction
Connector
Y
L
L
B
B
GR
GR
Y
L
LG
LG
W–B
W–B

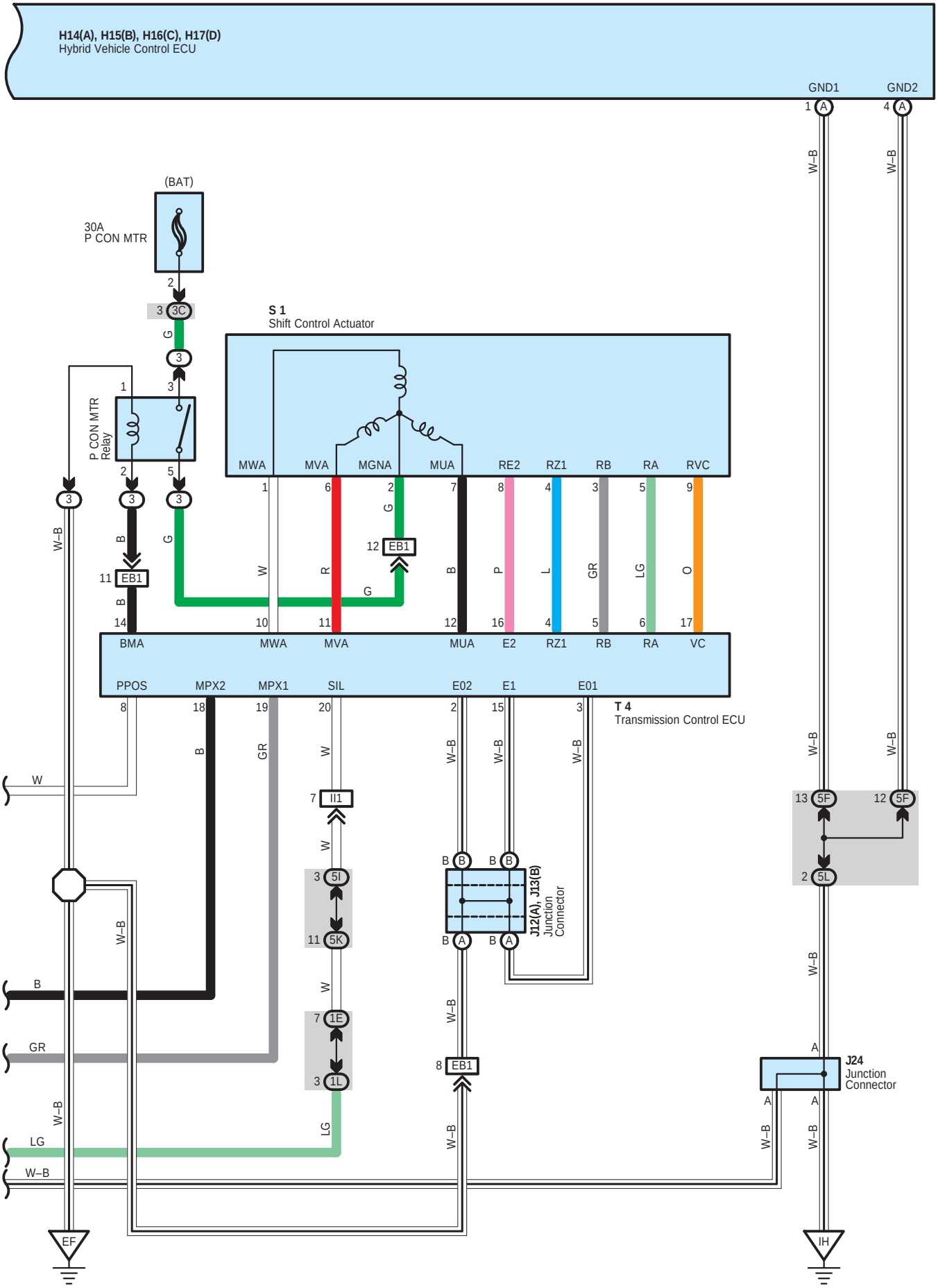
H14(A), H15(B), H16(C), H17(D)
Hybrid Vehicle Control ECU
GND1
GND2
(BAT)
30A
P CON MTR
S 1
Shift Control Actuator
P CON MTR
Relay
MWA
MVA
MGNA
MUA
RE2
RZ1
RB
RA
RVC
BMA
MWA
MVA
MUA
E2
RZ1
RB
RA
VC
PPOS
MPX2
MPX1
SIL
E02
E1
E01
T 4
Transmission Control ECU
J12(A), J13(B)
Junction
Connector
J24
Junction
Connector
EF
IH

System Outline

This is the system to change power supply mode by pushing power SW and to start hybrid system by operating power SW and brake pedal simultaneously. It also has function to hold the electrical key in the key slot and not to release the key from it unless the power supply condition and shift position are met. If there is abnormality in the system, amber portion of power SW blinks to warn the driver.

1. ACC ON Operation

When the electrical key turns on half–inserted SW and deep–inserted SW after inserting in the key slot, transponder key computer activates transponder key amplifier incorporated in key slot to identify ID. After the identification, if power SW is pushed without depressing brake pedal, power source control ECU starts. The ECU confirms that the brake pedal is not depressed from signal of stop light SW and also requests ID code box for ID identification result. If the ID identification is normal, power source control ECU turns on ACC relay and changes indicator of power SW to green lighting. In consequence, power supply is set to ACC ON condition.

2. IG ON Operation

If power SW is pushed without depressing brake pedal when ACC ON, power source control ECU confirms that the brake pedal is not depressed, and then turns on IG1 relay and IG2 relay as well as change indicator of power SW to amber lighting. Power supply is IG ON condition then.

3. Hybrid Start–Up Operation (READY)

When the electrical key turns on half–inserted SW and deep–inserted SW after inserting in the key slot, ID code box activates transponder key amplifier incorporated in key slot to identify ID. After the identification, if power SW is pushed with depressing brake pedal, power source control ECU starts. The ECU confirms that the brake pedal is depressed from signal of stop light SW and also requests ID code box for ID identification result. If the ID identification is normal, the ECU turns on ACC relay, IG1 relay and IG2 relay, and changes indicator of power SW to amber lighting. Power supply is IG ON condition then.

After that, power source control ECU sends start–up signal to hybrid vehicle control ECU. Hybrid vehicle control ECU and ID code box make communication for start–up permission. Hybrid vehicle control ECU controls to start–up hybrid system (READY).

At starting up hybrid system, power source control ECU controls to light off indicator of power SW.

4. Power Supply Off Operation

∗ When shift range is in P range

If power SW is pushed with power supply at READY condition while the vehicle is stationary, power source control ECU confirms that shift position is in P position, and then turns off ACC relay, IG1 relay and IG2 relay to put power supply in OFF condition. The ECU also controls to light off indicator of power SW.

If power SW is pushed with power supply at IG ON condition and without depressing brake pedal while the vehicle is stationary, power source control ECU confirms that shift position is in P position, and then turns off ACC relay, IG1 relay and IG2 relay to put power supply in OFF condition. The ECU also controls to light off indicator of power SW.

If electrical key is taken off from key slot with power supply at ACC ON condition while the vehicle is stationary, power source control ECU controls to put power supply in OFF condition automatically, which lights off indicator of power SW.

∗ When shift position is in other than P position

If power SW is pushed with power supply at IG ON (Including READY) condition while the vehicle is stationary, parking lock operation is carried out. After that, power source control ECU confirms that shift position is in P position and then turns off ACC relay, IG1 relay and IG2 relay to put power supply in OFF condition. The ECU controls to light off indicator of power SW.

5. Key Interlock Operation

Power source control ECU controls to hold the electrical key in the key slot and not to release the key from it unless the power supply condition and shift position are met. Power supply condition and shift position during the key interlock in operation are as follows;

∗ At starting–up hybrid system
∗ At power supply at IG ON
∗ At power supply at ACC ON and shift position at other than P position

6. Emergency Stop Operation of Hybrid System

If power SW is kept pushed more than three seconds during driving, hybrid system stops and power supply is changed to ACC ON.

7. Power Supply Resuming Control

Power source control ECU always stores power supply condition (OFF, ACC ON, IG ON)

When power supply is resumed after shutting off power supply by disconnecting battery terminal, original power supply condition returns due to control of power source control ECU.

○ : Parts Location

Code	See Page	Code	See Page	Code	See Page
A8	48	J3	47	M13	50
A12	48	J6	50	P6	51
B5 A	48	J9	50	P11	51
C7	46	J10	50	S1	47
C10	49	J12 A	50	S7 A	51
D1	49	J13 B	50	S8 B	51
D7	52	J14	50	S9 C	51
E4 A	49	J15	50	S10 D	51
E6 C	49	J16	50	S11	51
E7 D	49	J17	50	S16	51
G1	49	J18	50	T4	51
H14 A	49	J24	50	T5	51
H15 B	49	J25	50	T11	51
H16 C	49	K2 A	50		
H17 D	49	K3 B	50		

▭ : Relay Blocks

Code	See Page	Relay Blocks (Relay Block Location)
3	22	Engine Room R/B (Engine Compartment Left)

: Junction Block and Wire Harness Connector

Code	See Page	Junction Block and Wire Harness (Connector Location)
1A	30	Engine Room Main Wire and Driver Side J/B (Lower Finish Panel)
1B		
1D	30	Floor Wire and Driver Side J/B (Lower Finish Panel)
1E	30	Instrument Panel Wire and Driver Side J/B (Lower Finish Panel)
1F		
1G		
1J		
1K	31	
1L		
1M		
3C	23	Engine Room Main Wire and Engine Room J/B (Engine Compartment Left)
3D		
3I	24	
3J		
4C	38	Instrument Panel Wire and Center Connector No.1 (Behind the Combination Meter)
4D		
4E		
4F		
4G		
4H		
4I		
4J		
4K		
4L		
5C	42	Instrument Panel Wire and Center Connector No.2 (Instrument Panel Brace RH)
5D		
5E		
5F		
5G		
5H		
5I		
5J		
5K		
5L		
5M		

: Connector Joining Wire Harness and Wire Harness

Code	See Page	Joining Wire Harness and Wire Harness (Connector Location)
EB1	56	Engine Wire and Engine Room Main Wire (Inside of the Engine Room R/B)
IA1	58	Engine Room Main Wire and Instrument Panel Wire (Upper Parts of Front Body Pillar LH)
IA3		
IG1	59	Instrument Panel Wire and Instrument Panel No.2 Wire (Behind the Combination Meter)
IG2		
II1	59	Engine Wire and Instrument Panel Wire (Behind the Glove Box)

: Ground Points

Code	See Page	Ground Points Location
EC	56	Engine Block
EE	56	Left Side of the Suspension Tower
EF		
IH	58	Cowl Side Panel LH
II	58	Instrument Panel Brace LH

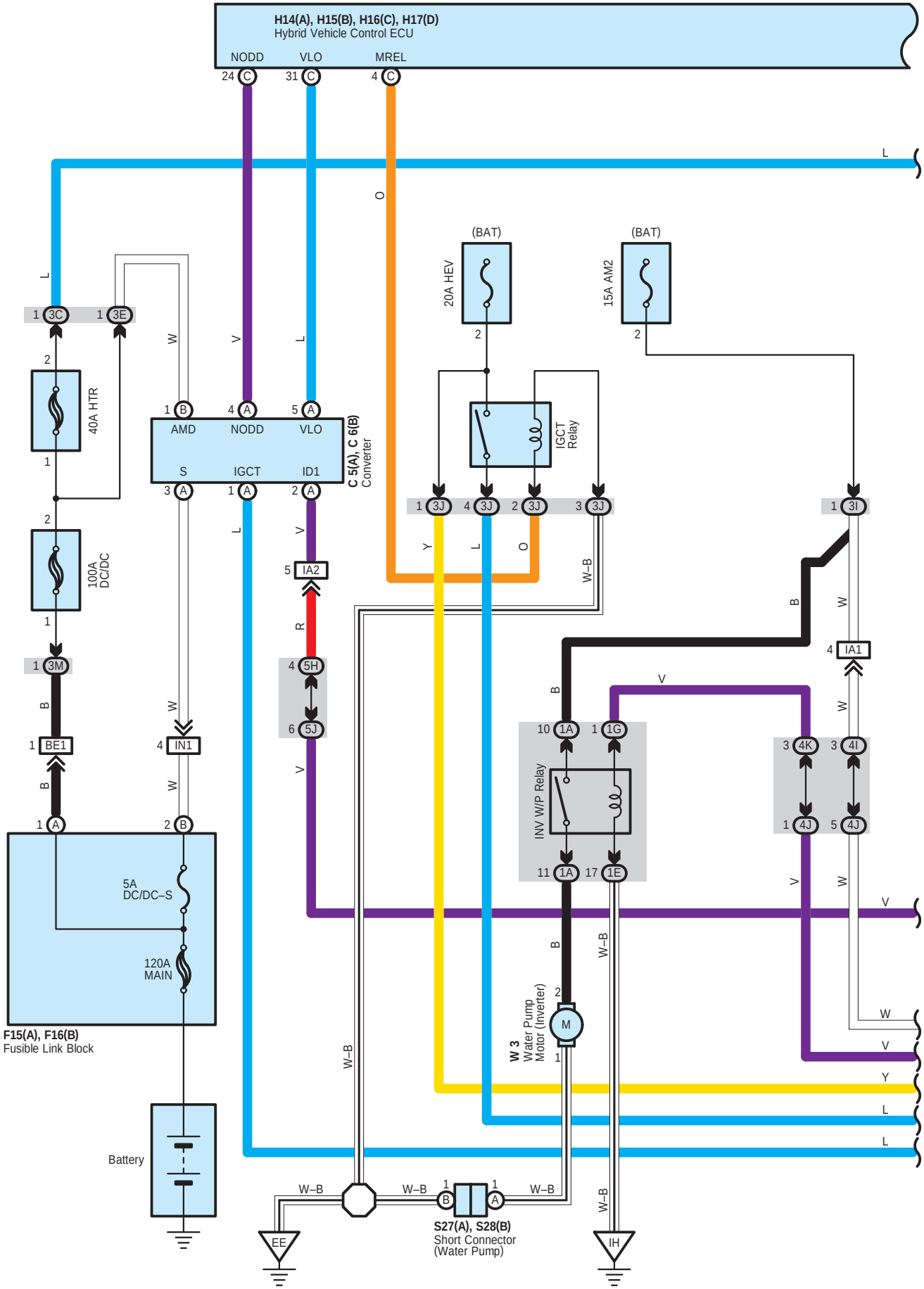
H14(A), H15(B), H16(C), H17(D)
Hybrid Vehicle Control ECU
NODD
VLO
MREL
24 C
31 C
4 C
L
O
(BAT)
20A HEV
2
(BAT)
15A AM2
2
1 3C
1 3E
2
40A HTR
1
2
100A
DC/DC
1
1 3M
B
1 BE1
B
1 A
1 B
AMD
NODD
VLO
S
IGCT
ID1
3 A
1 A
2 A
C 5(A), C 6(B)
Converter
IGCT
Relay
1 3J
4 3J
2 3J
3 3J
1 3I
5 IA2
R
4 5H
6 5J
V
W
4 IA1
B
V
10 1A
1 1G
INV W/P Relay
11 1A
17 1E
3 4K
3 4I
1 4J
5 4J
4 IN1
W
2 B
5A
DC/DC–S
120A
MAIN
F15(A), F16(B)
Fusible Link Block
Battery
W–B
M
W 3
Water Pump
Motor (Inverter)
1
2
Y
W
EE
IH
1
B
1
A
S27(A), S28(B)
Short Connector
(Water Pump)

H14(A), H15(B), H16(C), H17(D)
Hybrid Vehicle Control ECU

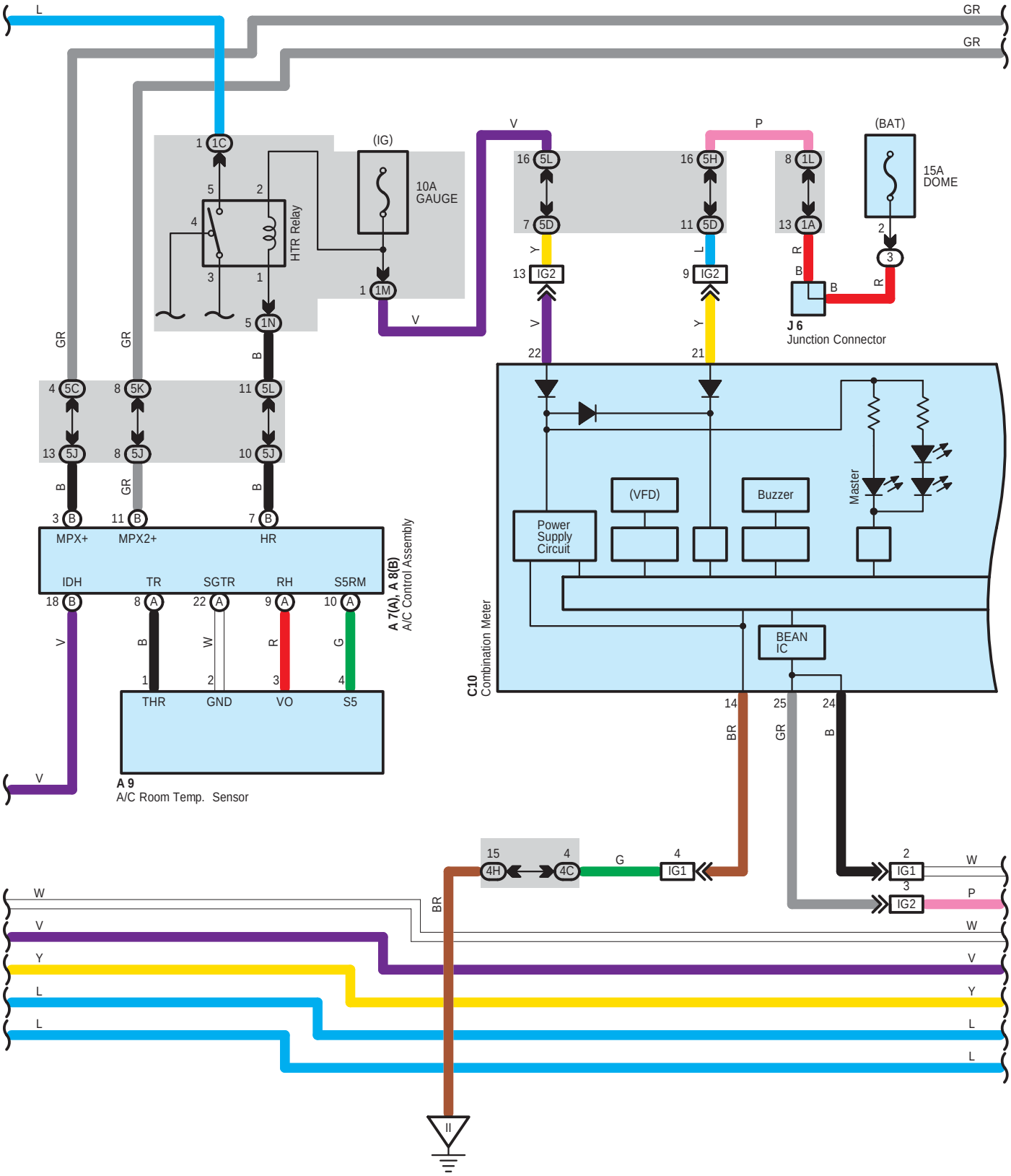

H14(A), H15(B), H16(C), H17(D)
Hybrid Vehicle Control ECU

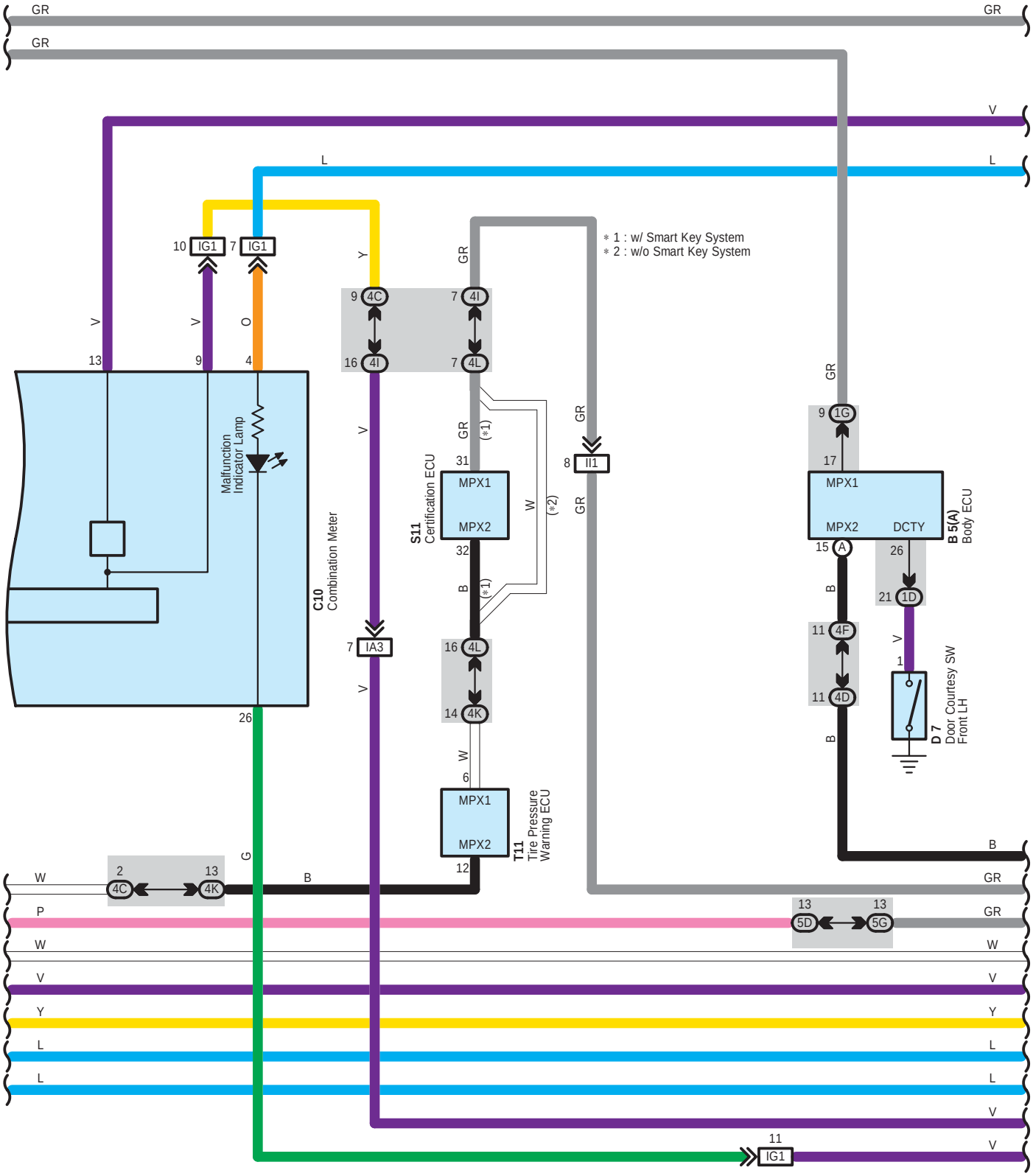

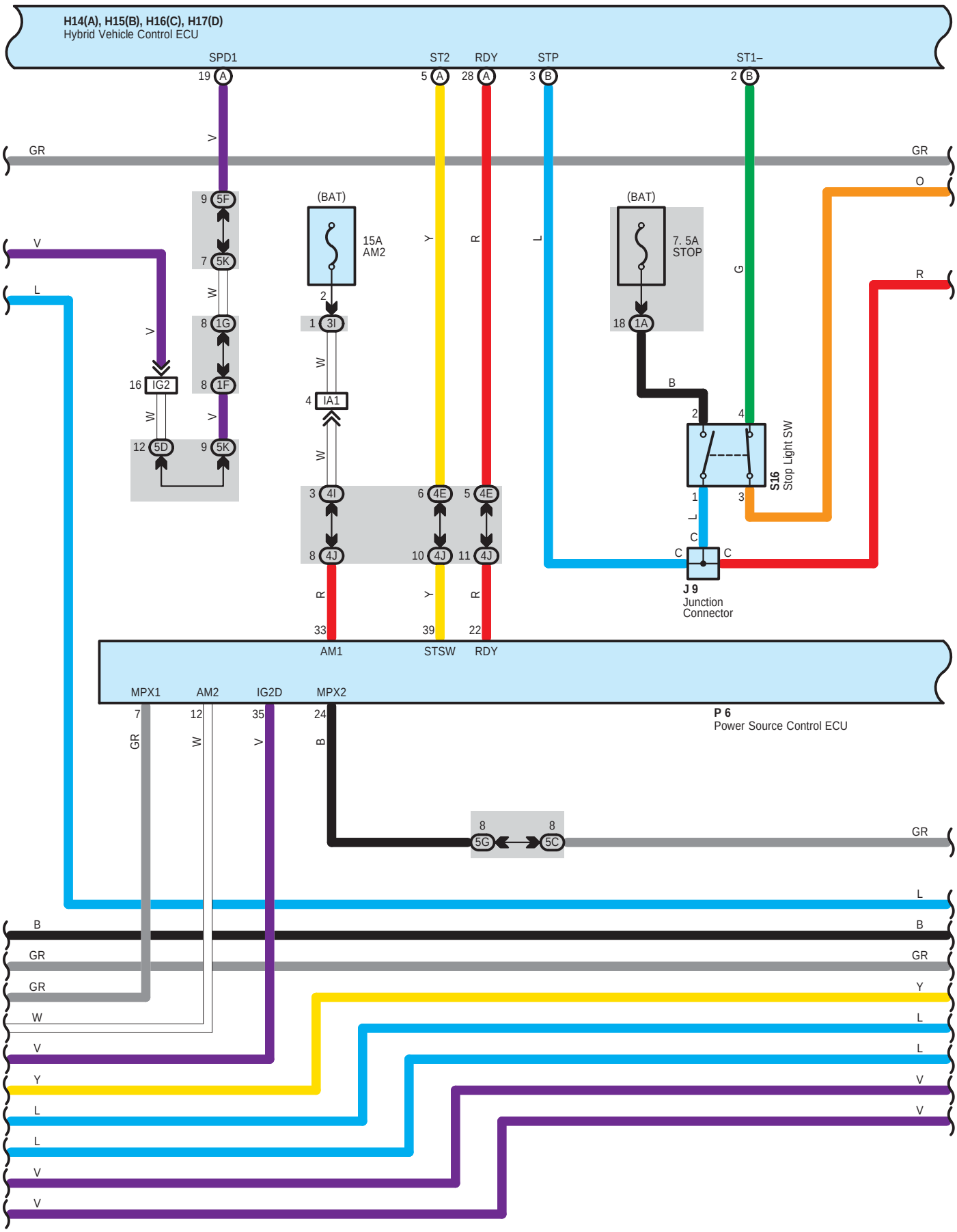
H14(A), H15(B), H16(C), H17(D)
Hybrid Vehicle Control ECU
SPD1
ST2
RDY
STP
ST1–
19 A
5 A
28 A
3 B
2 B
GR
V
L
Y
R
W
O
G
9 5F
7 5K
8 1G
8 1F
12 5D
9 5K
16 IG2
(BAT)
15A
AM2
2
1 3I
4 IA1
3 4I
8 4J
6 4E
10 4J
5 4E
11 4J
33
AM1
39
STSW
22
RDY
(BAT)
7. 5A
STOP
18 1A
B
2
4
S16
Stop Light SW
1
3
C
J 9
Junction
Connector
MPX1
AM2
IG2D
MPX2
7
12
35
24
P 6
Power Source Control ECU
8
5G
8
5C

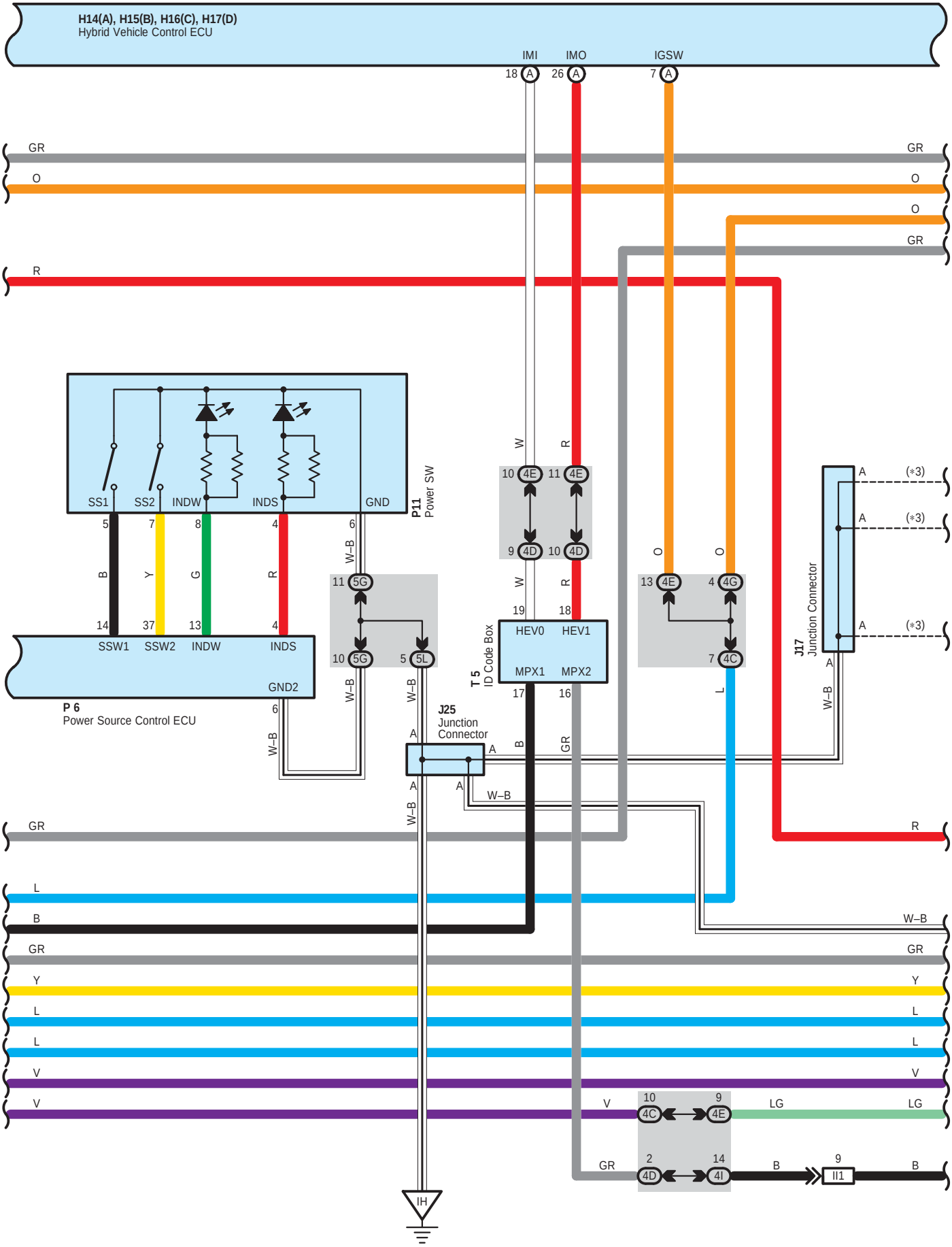
H14(A), H15(B), H16(C), H17(D)
Hybrid Vehicle Control ECU
IMI
IMO
IGSW
18 A
26 A
7 A
GR
O
R
W
R
10 4E
11 4E
9 4D
10 4D
SS1
SS2
INDW
INDS
GND
P11
Power SW
5
7
8
4
6
B
Y
G
R
W–B
11 5G
10 5G
5 5L
14
37
13
4
SSW1
SSW2
INDW
INDS
GND2
P 6
Power Source Control ControlECU
6
W–B
W–B
W–B
J25
Junction
Connector
A
A
A
A
W–B
T 5
ID Code Box
HEV0
HEV1
MPX1
MPX2
19
18
17
16
B
GR
13 4E
4 4G
7 4C
O
O
L
J17
Junction Connector
A
A
A
A
(*3)
(*3)
(*3)
W–B
GR
R
L
B
W–B
GR
Y
L
L
V
V
V
10 4C
9 4E
LG
LG
GR
2 4D
14 4I
B
9
II1
B
IH

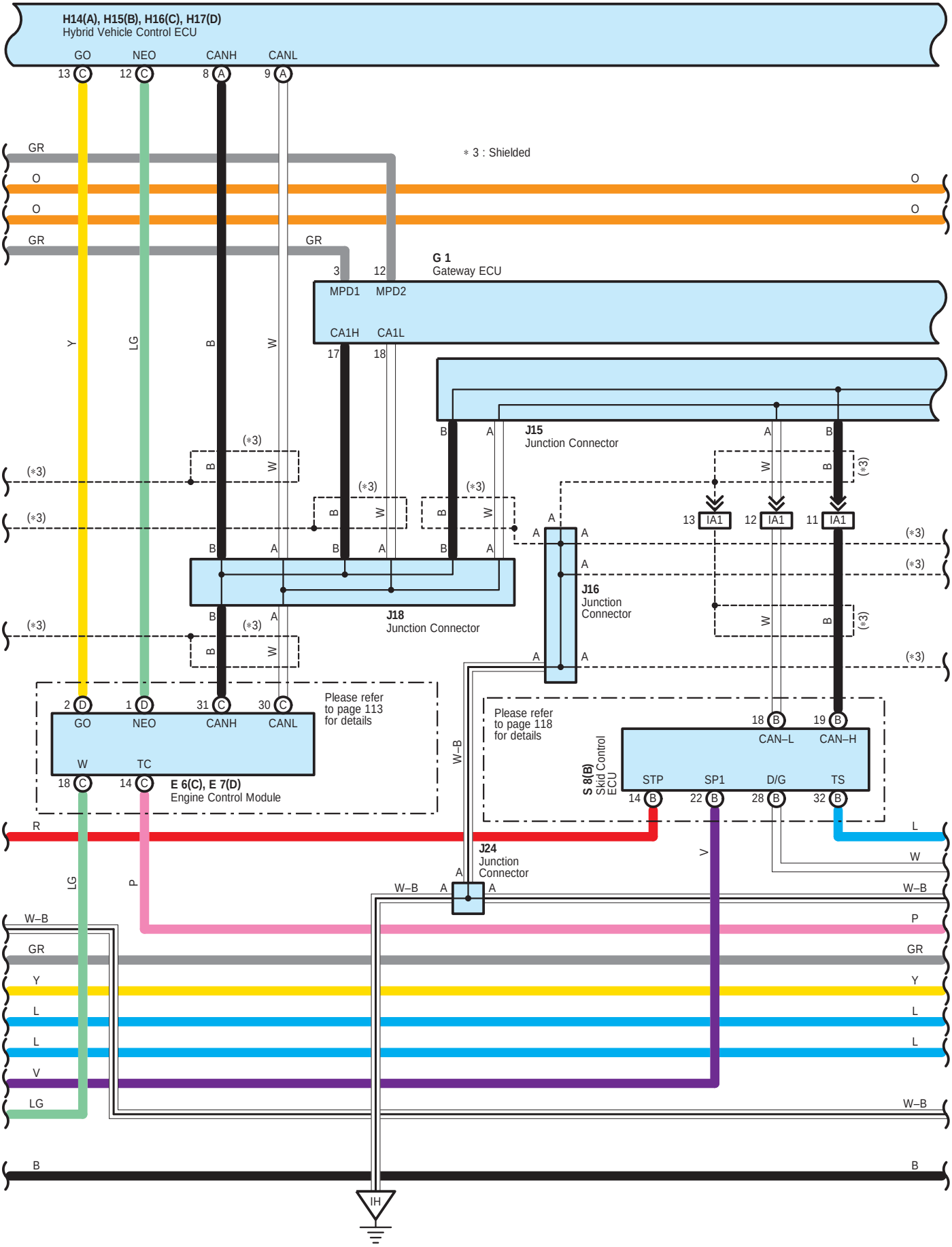
H14(A), H15(B), H16(C), H17(D)
Hybrid Vehicle Control ECU
GO
NEO
CANH
CANL
13 C
12 C
8 A
9 A
∗ 3 : Shielded
GR
O
O
GR
G 1
Gateway ECU
3
12
MPD1
MPD2
CA1H
CA1L
17
18
Y
LG
B
W
J15
Junction Connector
(∗3)
J16
Junction
Connector
J18
Junction Connector
13 IA1
12 IA1
11 IA1
2 D
1 D
31 C
30 C
GO
NEO
CANH
CANL
W
TC
18 C
14 C
E 6(C), E 7(D)
Engine Control Module
Please refer
to page 113
for details
Please refer
to page 118
for details
18 B
19 B
CAN–L
CAN–H
S 8(B)
Skid Control
ECU
STP
SP1
D/G
TS
14 B
22 B
28 B
32 B
R
L
W
V
W–B
J24
Junction
Connector
P
GR
Y
L
L
V
LG
W–B
B
IH

H14(A), H15(B), H16(C), H17(D)
Hybrid Vehicle Control ECU

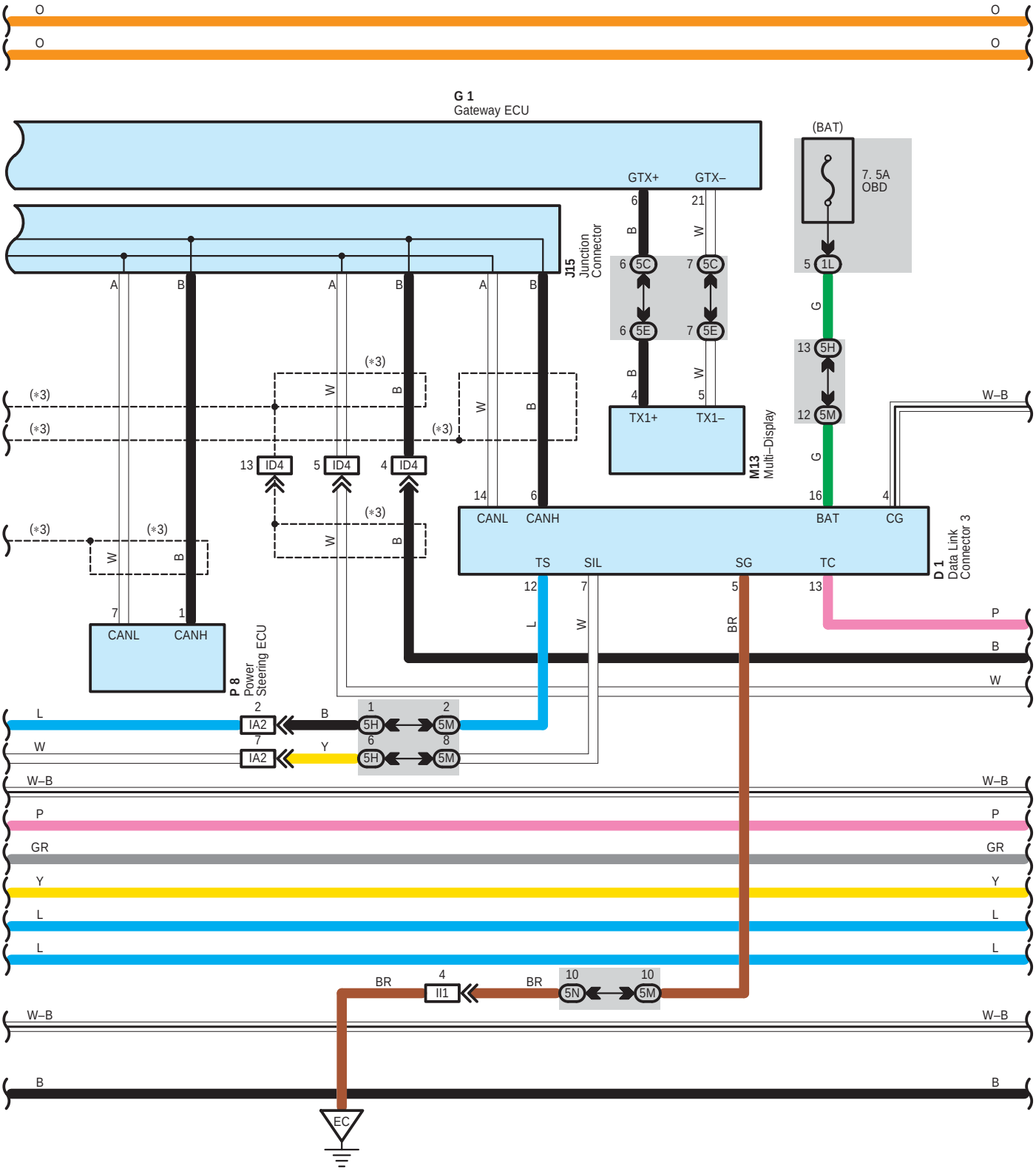

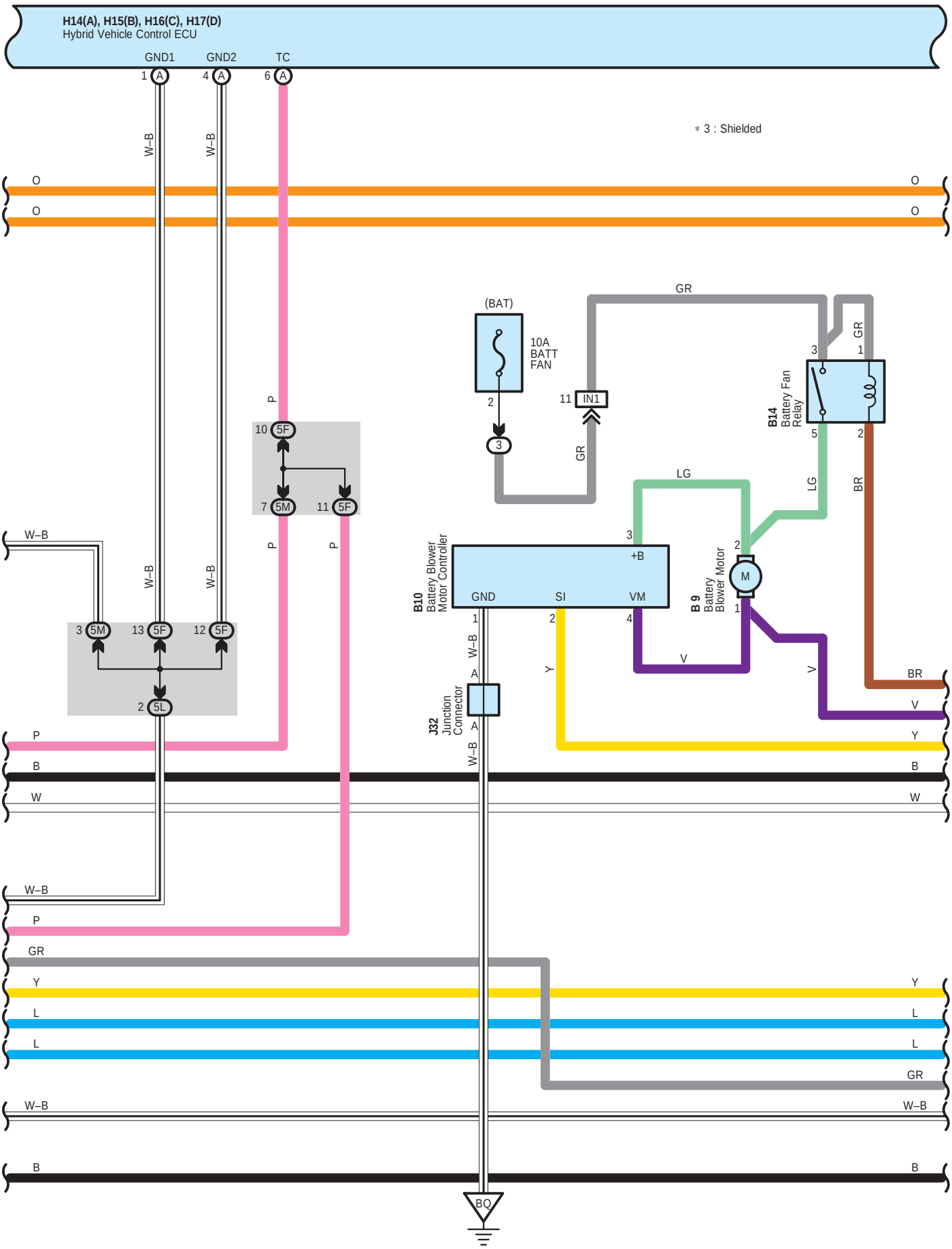
H14(A), H15(B), H16(C), H17(D)
Hybrid Vehicle Control ECU
GND1
GND2
TC
1 A
4 A
6 A
* 3 : Shielded
W–B
O
P
(BAT)
10A
BATT
FAN
2
3
11 IN1
GR
B14
Battery Fan
Relay
5
LG
BR
10 5F
7 5M
11 5F
B10
Battery Blower
Motor Controller
+B
GND
SI
VM
B 9
Battery
Blower Motor
M
J32
Junction
Connector
Y
V
3 5M
13 5F
12 5F
2 5L
B
W
L
BQ

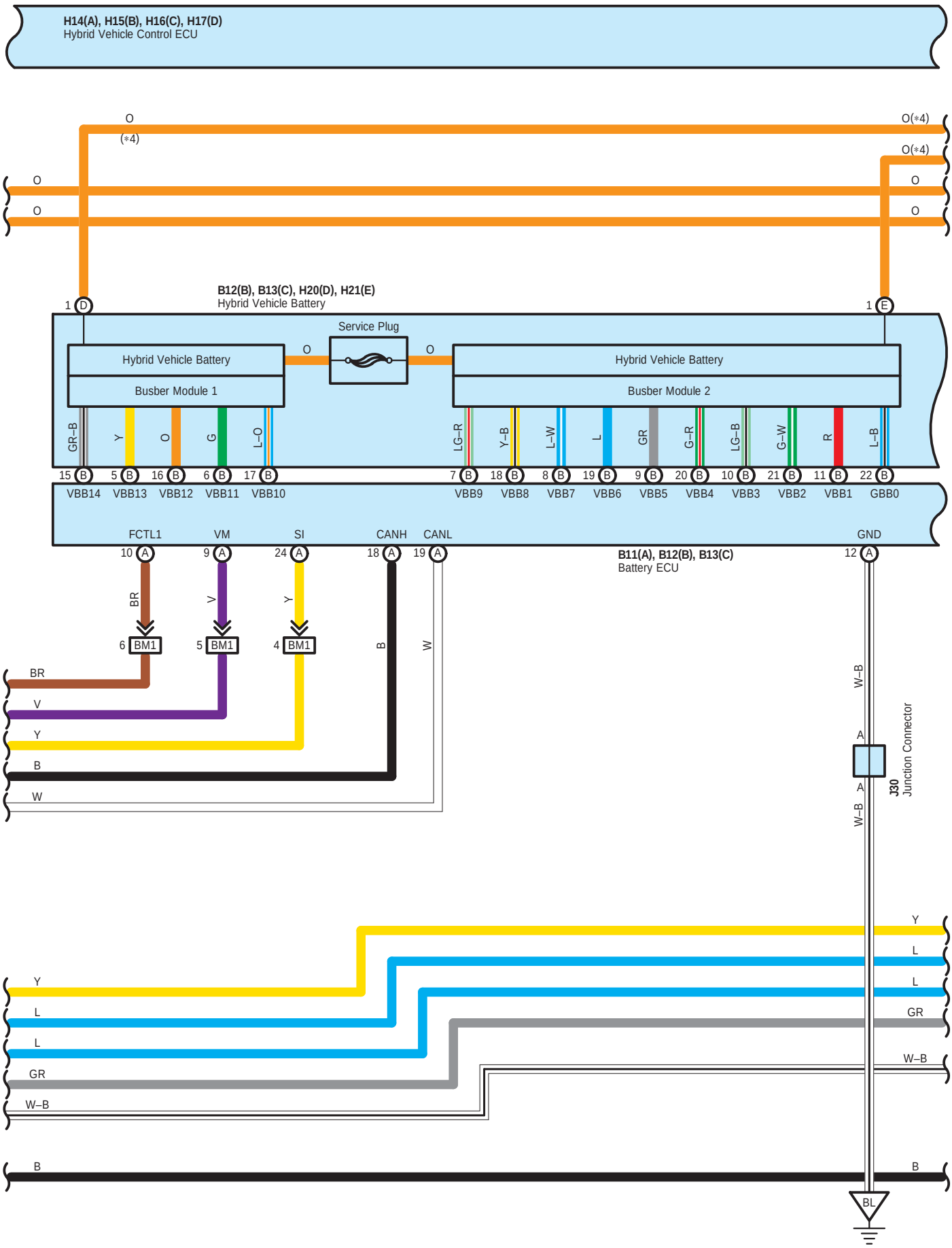
H14(A), H15(B), H16(C), H17(D)
Hybrid Vehicle Control ECU
O
(*4)
O(*4)
O
O
B12(B), B13(C), H20(D), H21(E)
Hybrid Vehicle Battery
Service Plug
Hybrid Vehicle Battery
Busber Module 1
Hybrid Vehicle Battery
Busber Module 2
GR–B
Y
O
G
L–O
LG–R
Y–B
L–W
L
GR
G–R
LG–B
G–W
R
L–B
VBB14
VBB13
VBB12
VBB11
VBB10
VBB9
VBB8
VBB7
VBB6
VBB5
VBB4
VBB3
VBB2
VBB1
GBB0
FCTL1
VM
SI
CANH
CANL
GND
B11(A), B12(B), B13(C)
Battery ECU
BM1
BR
V
Y
B
W
W–B
J30
Junction Connector
L
GR
BL

∗ 4 : High Voltage

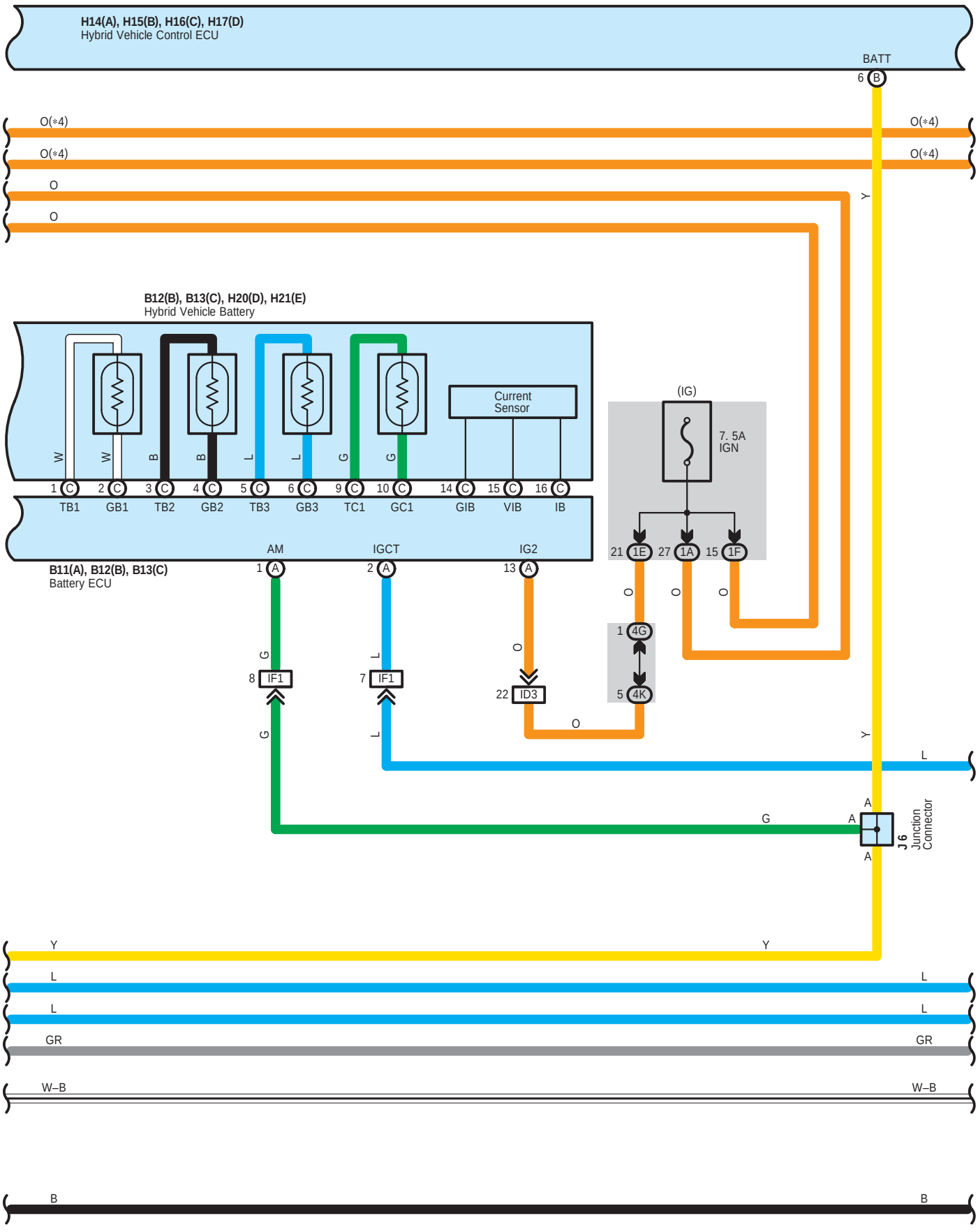

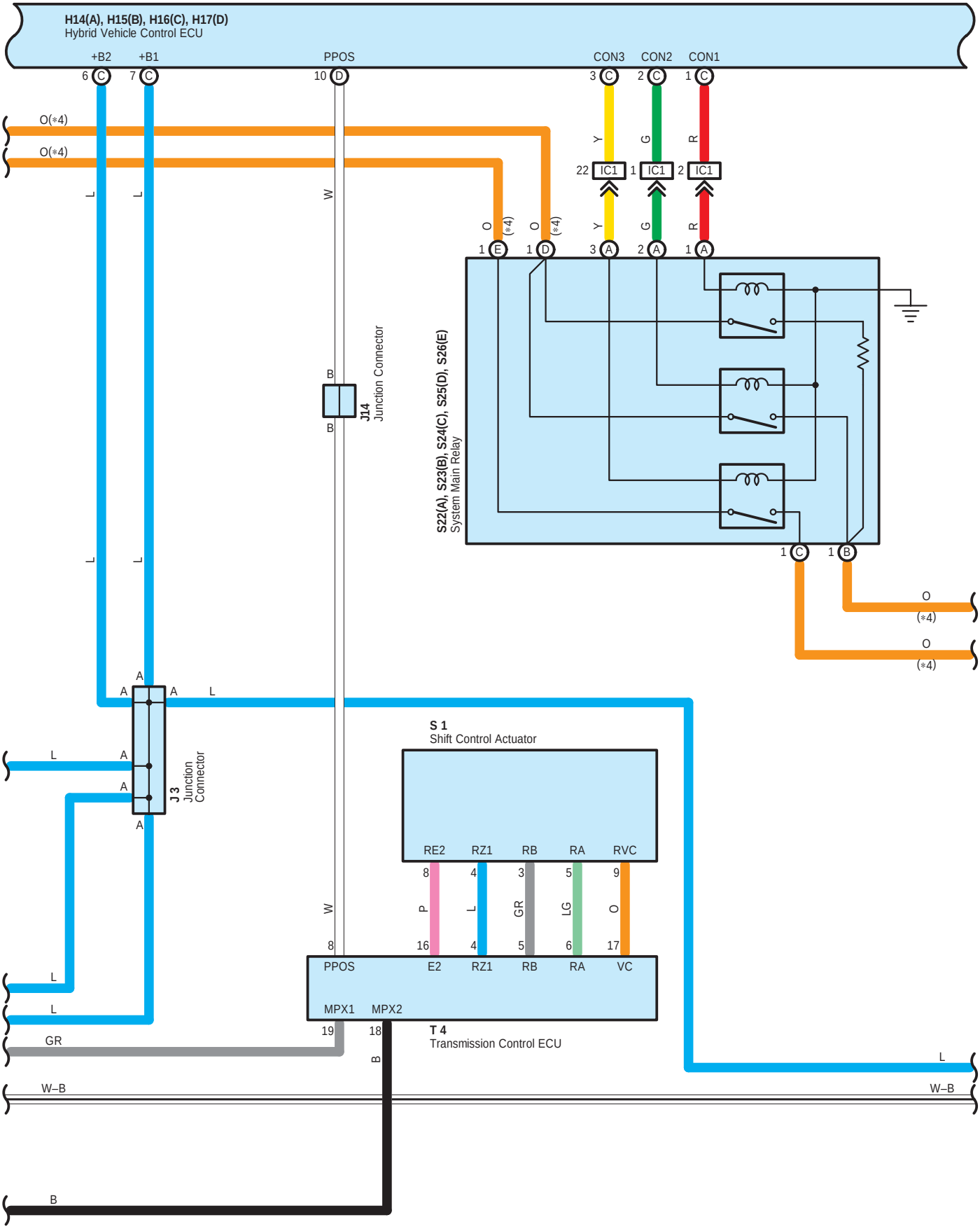
H14(A), H15(B), H16(C), H17(D)
Hybrid Vehicle Control ECU
+B2
+B1
PPOS
CON3
CON2
CON1
6 C
7 C
10 D
3 C
2 C
1 C
O(*4)
O(*4)
L
L
W
Y
G
R
22 IC1
1 IC1
2 IC1
O (*4)
O (*4)
1 E
1 D
3 A
2 A
1 A
B
B
J14
Junction Connector
S22(A), S23(B), S24(C), S25(D), S26(E)
System Main Relay
1 C
1 B
O
(*4)
O
(*4)
A
A
A
L
L
L
A
A
A
J 3
Junction
Connector
S 1
Shift Control Actuator
RE2
RZ1
RB
RA
RVC
8
4
3
5
9
P
L
GR
LG
O
16
4
5
6
17
W
8
PPOS
E2
RZ1
RB
RA
VC
MPX1
MPX2
19
18
B
T 4
Transmission Control ECU
L
L
GR
L
W–B
W–B
B

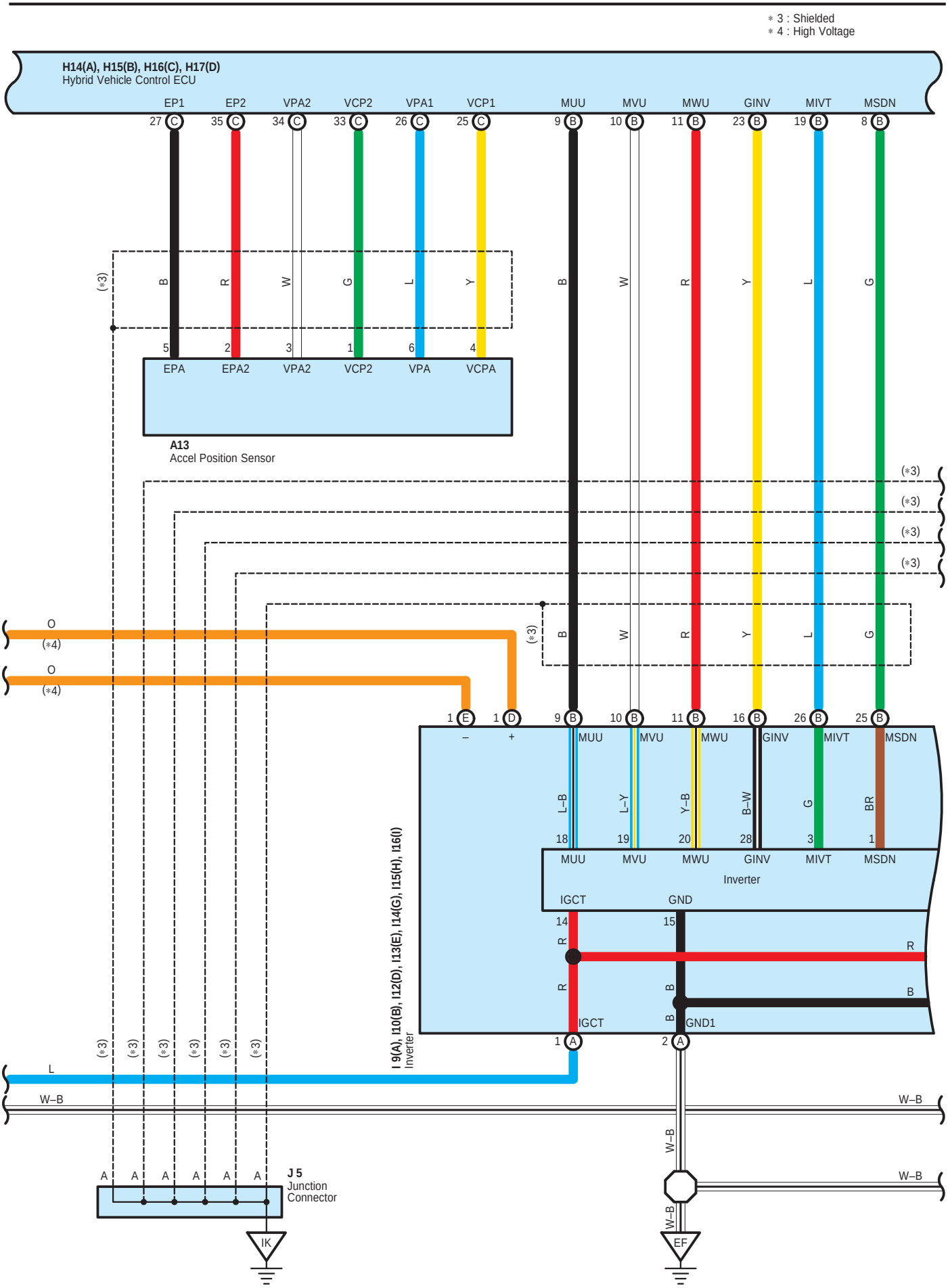
＊3 : Shielded
＊4 : High Voltage
H14(A), H15(B), H16(C), H17(D)
Hybrid Vehicle Control ECU
EP1
EP2
VPA2
VCP2
VPA1
VCP1
MUU
MVU
MWU
GINV
MIVT
MSDN
27 C
35 C
34 C
33 C
26 C
25 C
9 B
10 B
11 B
23 B
19 B
8 B
(*3)
B
R
W
G
L
Y
5
2
3
1
6
4
EPA
EPA2
VPA2
VCP2
VPA
VCPA
A13
Accel Position Sensor
(*3)
(*3)
(*3)
(*3)
O
(*4)
O
(*4)
(*3)
1 E
1 D
9 B
10 B
11 B
16 B
26 B
25 B
–
+
MUU
MVU
MWU
GINV
MIVT
MSDN
L–B
L–Y
Y–B
B–W
G
BR
18
19
20
28
3
1
MUU
MVU
MWU
GINV
MIVT
MSDN
Inverter
IGCT
GND
14
15
R
R
R
B
B
B
IGCT
GND1
1 A
2 A
I 9(A), I10(B), I12(D), I13(E), I14(G), I15(H), I16(I)
Inverter
(*3)
(*3)
(*3)
(*3)
(*3)
(*3)
L
W–B
W–B
W–B
W–B
W–B
A
A
A
A
A
A
J 5
Junction
Connector
IK
EF

∗ 3 : Shielded

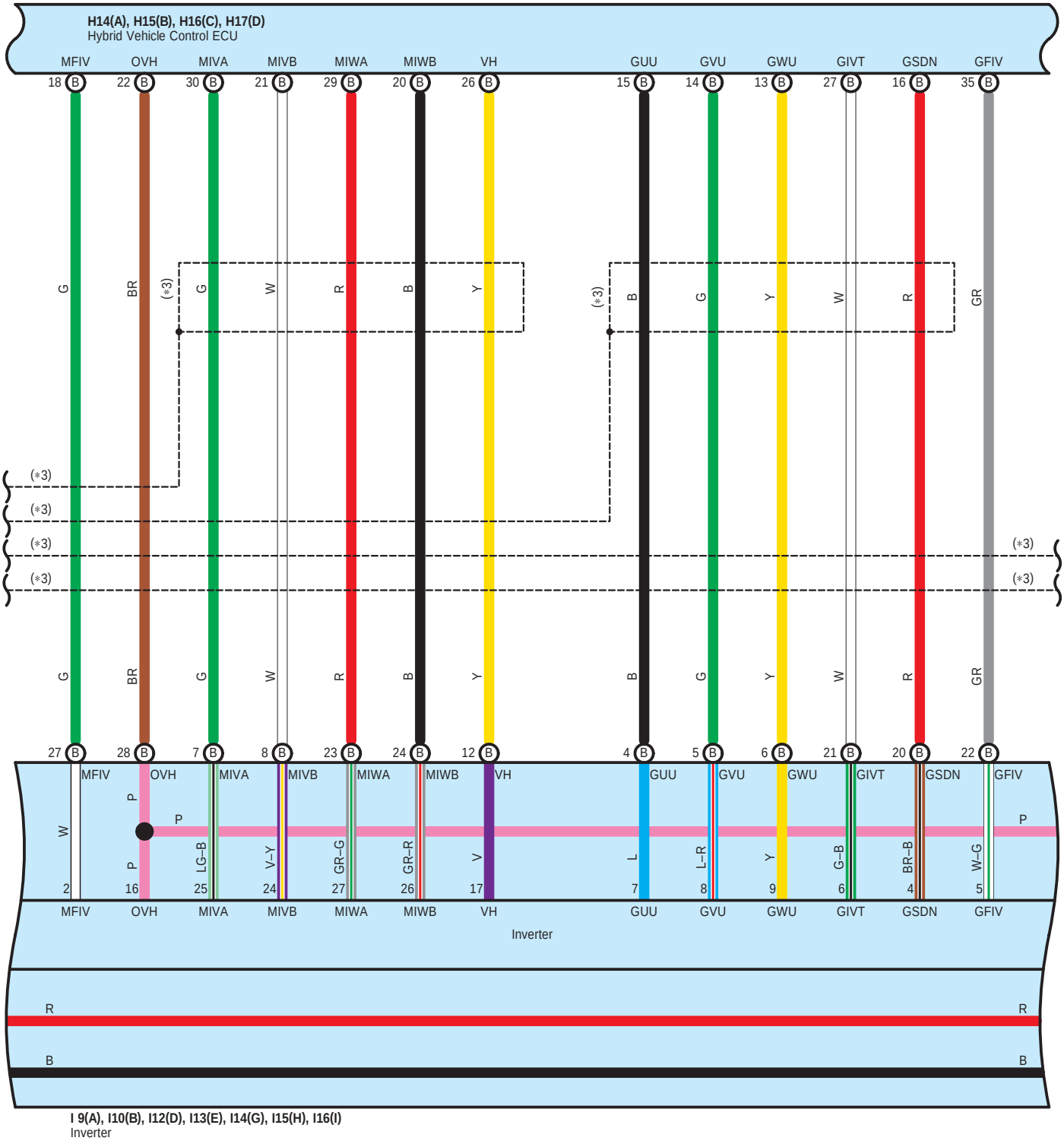
H14(A), H15(B), H16(C), H17(D)
Hybrid Vehicle Control ECU
MFIV OVH MIVA MIVB MIWA MIWB VH GUU GVU GWU GIVT GSDN GFIV
18 22 30 21 29 20 26 15 14 13 27 16 35
G BR G W R B Y B G Y W R GR
(∗3)
27 28 7 8 23 24 12 4 5 6 21 20 22
MFIV OVH MIVA MIVB MIWA MIWB VH GUU GVU GWU GIVT GSDN GFIV
W P P LG–B V–Y GR–G GR–R V L L–R Y G–B BR–B W–G P
2 16 25 24 27 26 17 7 8 9 6 4 5
Inverter
R R
B B
I 9(A), I10(B), I12(D), I13(E), I14(G), I15(H), I16(I)
Inverter
W–B W–B
W–B W–B

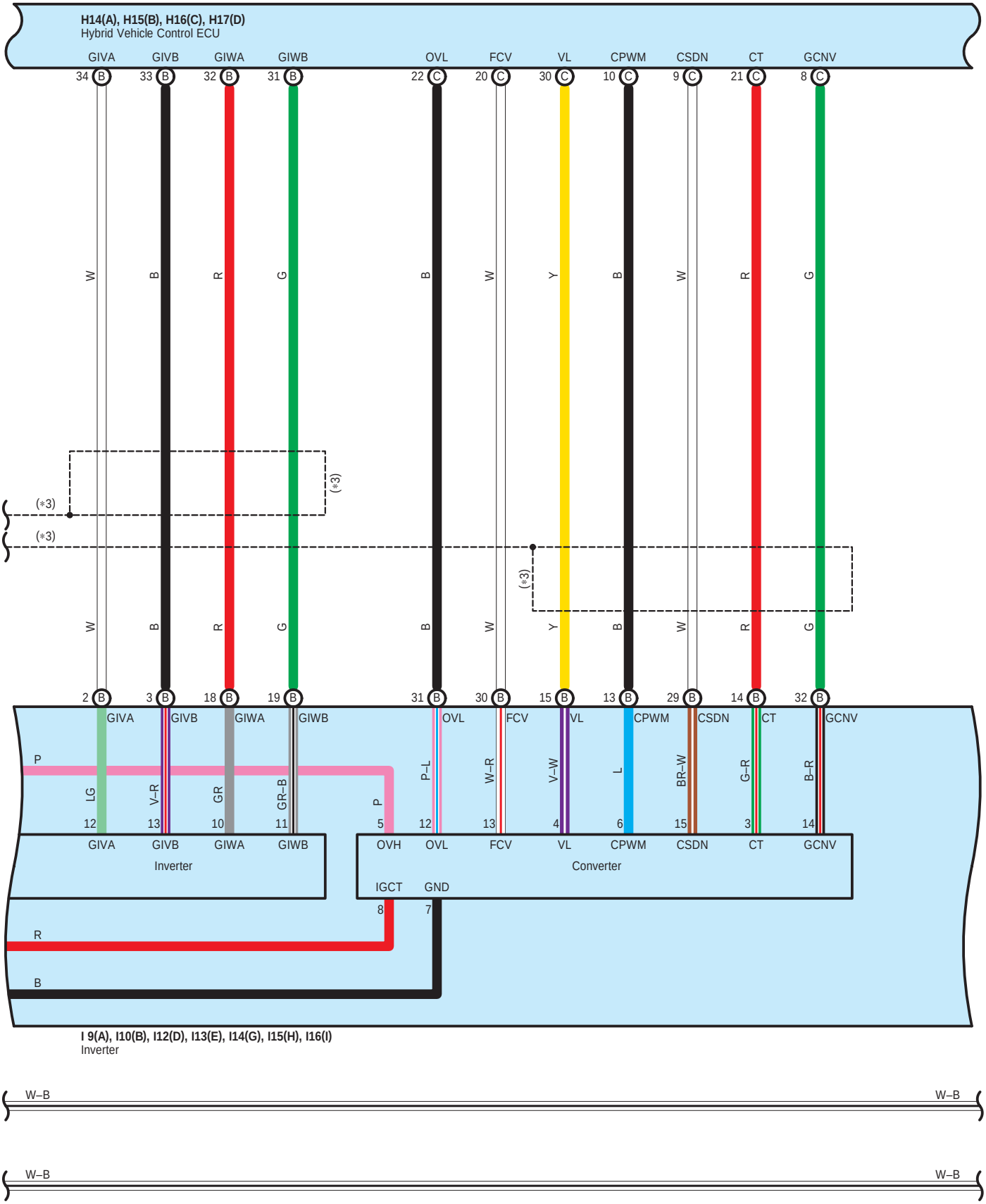
H14(A), H15(B), H16(C), H17(D)
Hybrid Vehicle Control ECU
GIVA GIVB GIWA GIWB OVL FCV VL CPWM CSDN CT GCNV
34 33 32 31 22 20 30 10 9 21 8
W B R G B W Y B W R G
(*3)
(*3)
(*3)
(*3)
2 3 18 19 31 30 15 13 29 14 32
GIVA GIVB GIWA GIWB OVL FCV VL CPWM CSDN CT GCNV
P
LG V–R GR GR–B P P–L W–R V–W L BR–W G–R B–R
12 13 10 11 5 12 13 4 6 15 3 14
GIVA GIVB GIWA GIWB
Inverter
OVH OVL FCV VL CPWM CSDN CT GCNV
Converter
IGCT GND
8 7
R
B
I 9(A), I10(B), I12(D), I13(E), I14(G), I15(H), I16(I)
Inverter
W–B W–B
W–B W–B

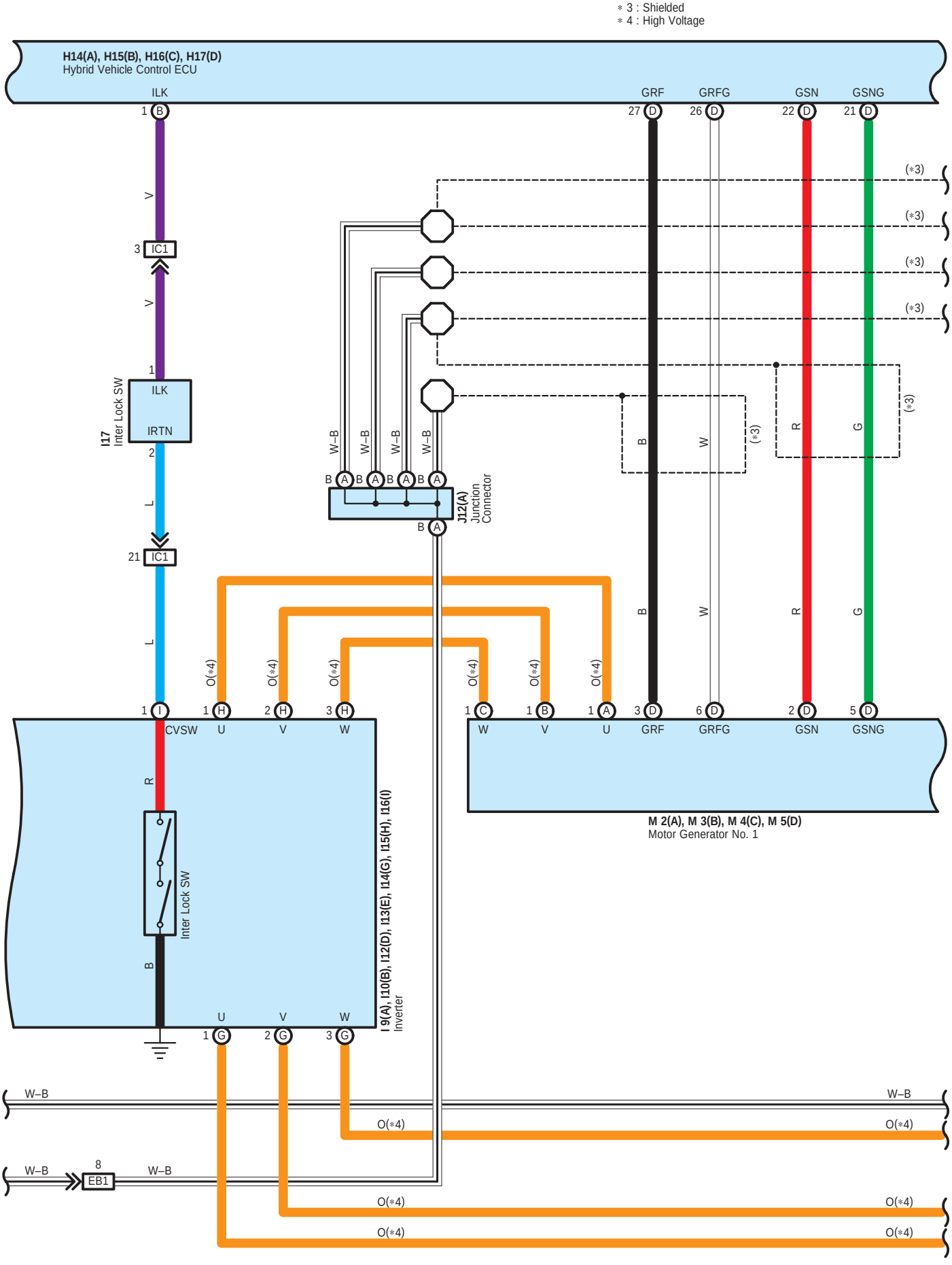
∗ 3 : Shielded
∗ 4 : High Voltage
H14(A), H15(B), H16(C), H17(D)
Hybrid Vehicle Control ECU
ILK
GRF
GRFG
GSN
GSNG
IC1
I17
Inter Lock SW
IRTN
J12(A)
Junction Connector
W–B
O(∗4)
(∗3)
CVSW
U
V
W
I 9(A), I10(B), I12(D), I13(E), I14(G), I15(H), I16(I)
Inverter
M 2(A), M 3(B), M 4(C), M 5(D)
Motor Generator No. 1
EB1

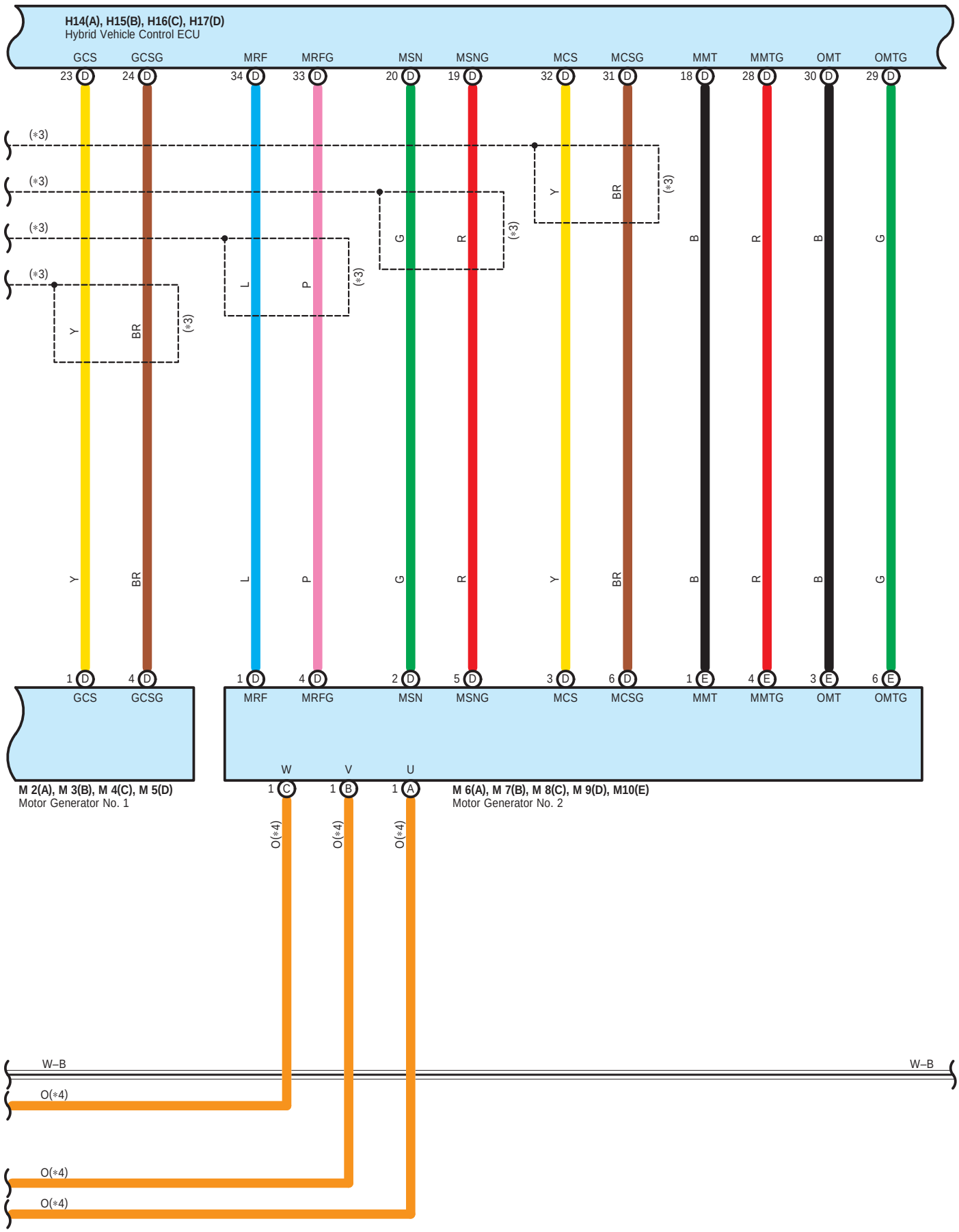
H14(A), H15(B), H16(C), H17(D)
Hybrid Vehicle Control ECU
GCS
GCSG
MRF
MRFG
MSN
MSNG
MCS
MCSG
MMT
MMTG
OMT
OMTG
23 D
24 D
34 D
33 D
20 D
19 D
32 D
31 D
18 D
28 D
30 D
29 D
(*3)
Y
BR
L
P
G
R
B
1 D
4 D
2 D
5 D
3 D
6 D
1 E
4 E
3 E
6 E
M 2(A), M 3(B), M 4(C), M 5(D)
Motor Generator No. 1
M 6(A), M 7(B), M 8(C), M 9(D), M10(E)
Motor Generator No. 2
W
V
U
1 C
1 B
1 A
O(*4)
W–B

＊3 : Shielded

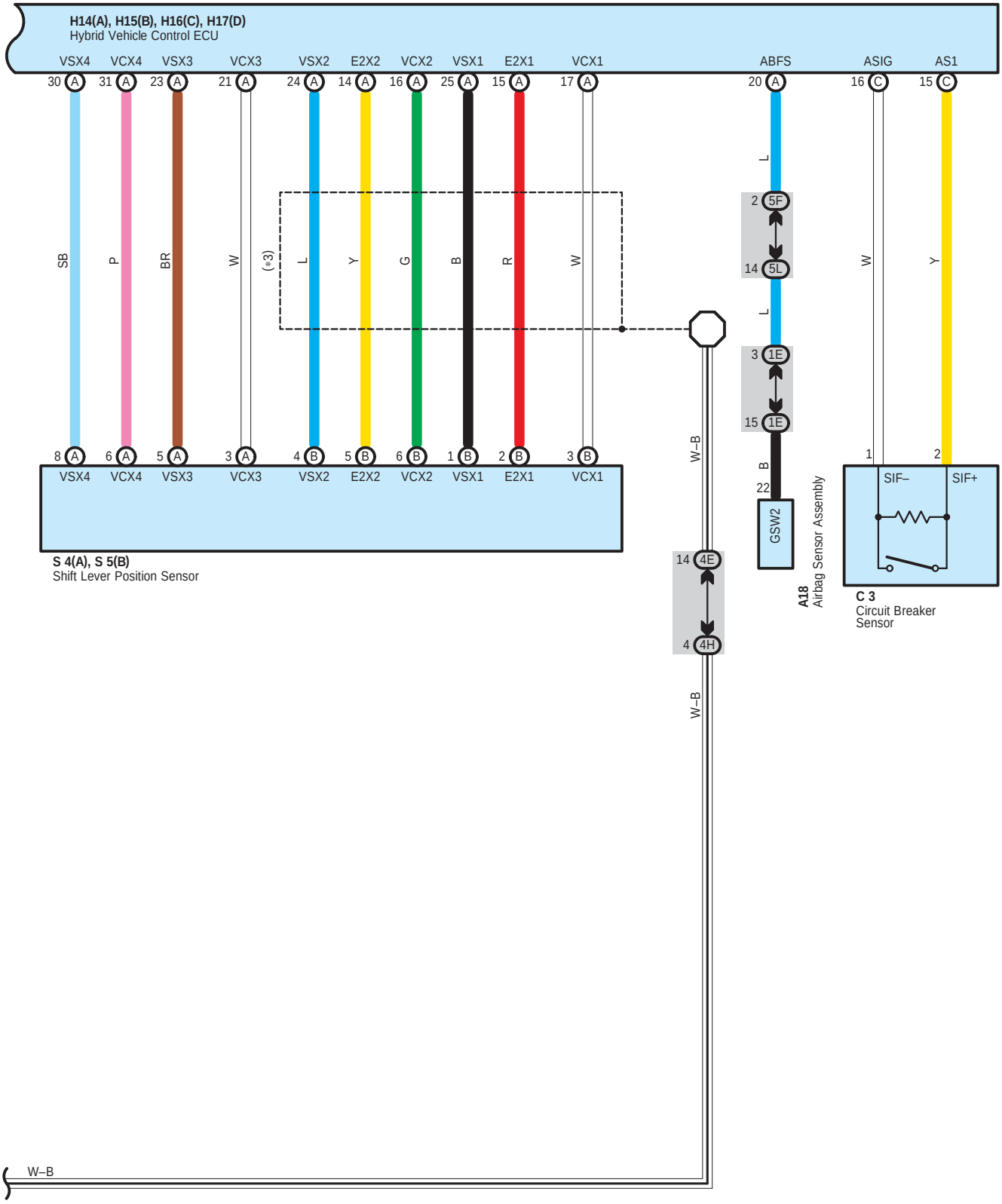
H14(A), H15(B), H16(C), H17(D)
Hybrid Vehicle Control ECU
VSX4 VCX4 VSX3 VCX3 VSX2 E2X2 VCX2 VSX1 E2X1 VCX1
30 A 31 A 23 A 21 A 24 A 14 A 16 A 25 A 15 A 17 A
SB P BR W (*3) L Y G B R W
8 A 6 A 5 A 3 A 4 B 5 B 6 B 1 B 2 B 3 B
VSX4 VCX4 VSX3 VCX3 VSX2 E2X2 VCX2 VSX1 E2X1 VCX1
S 4(A), S 5(B)
Shift Lever Position Sensor
W–B
14 4E
4 4H
W–B
W–B
ABFS
20 A
L
2 5F
14 5L
L
3 1E
15 1E
B
22
GSW2
A18
Airbag Sensor Assembly
ASIG AS1
16 C 15 C
W Y
1 2
SIF– SIF+
C 3
Circuit Breaker
Sensor

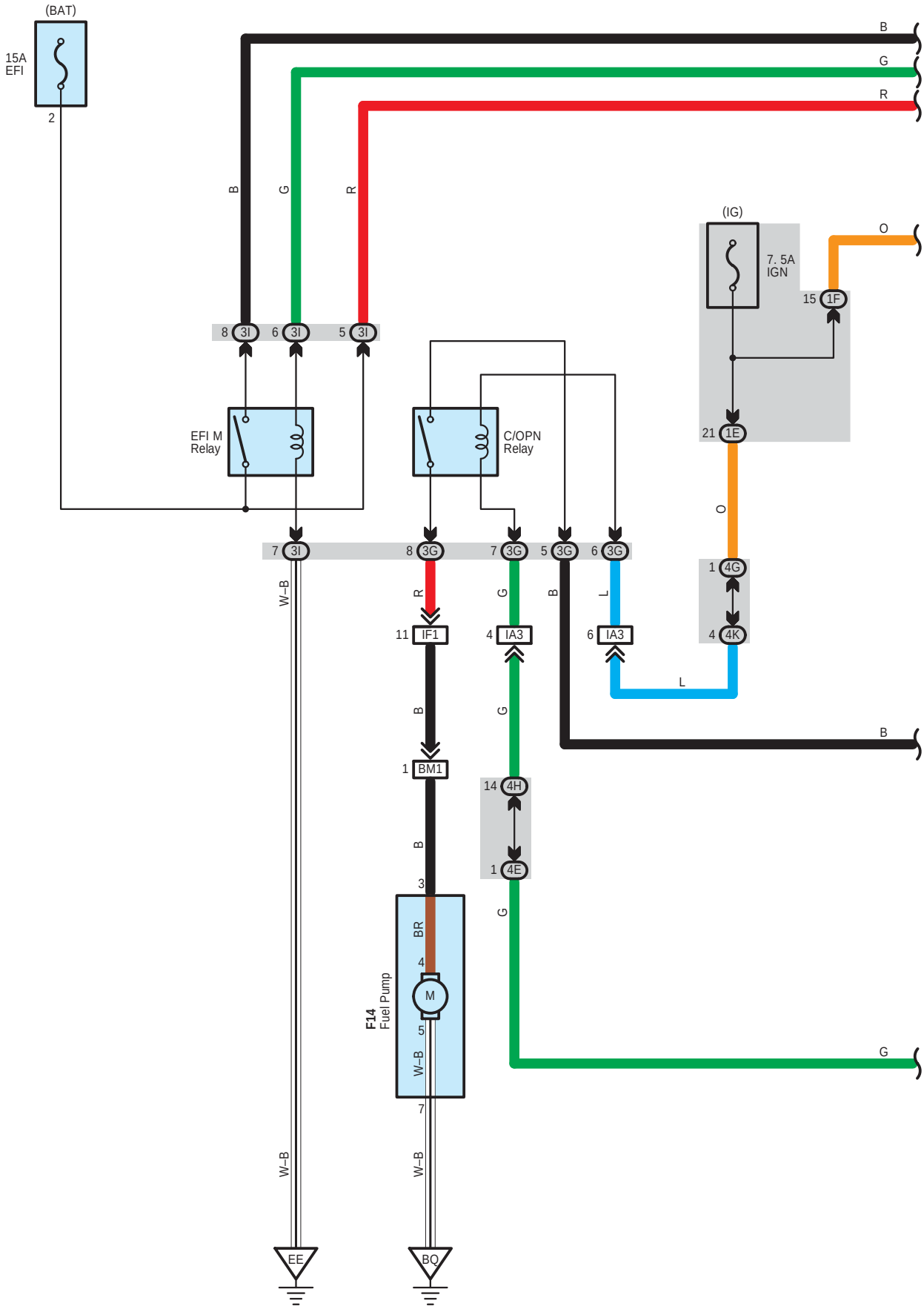
(BAT)
15A
EFI
2
B
G
R
(IG)
7. 5A
IGN
O
15 1F
21 1E
8 3I
6 3I
5 3I
EFI M
Relay
C/OPN
Relay
7 3I
8 3G
7 3G
5 3G
6 3G
W–B
R
G
B
L
1 4G
4 4K
11 IF1
4 IA3
6 IA3
1 BM1
14 4H
1 4E
3
4
5
7
BR
M
F14
Fuel Pump
EE
BQ

[Details of Engine Control Module Section]

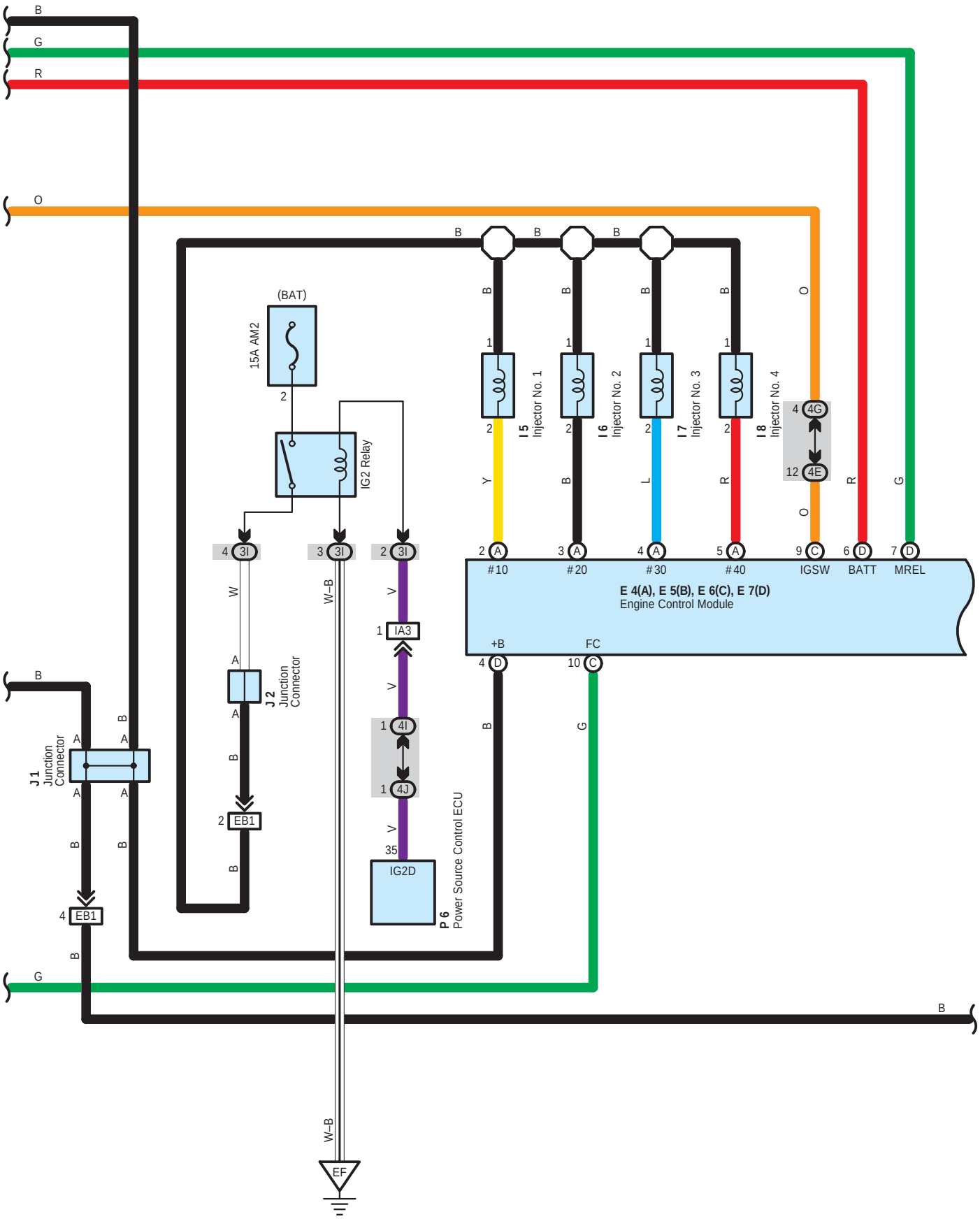

∗ 3 : Shielded

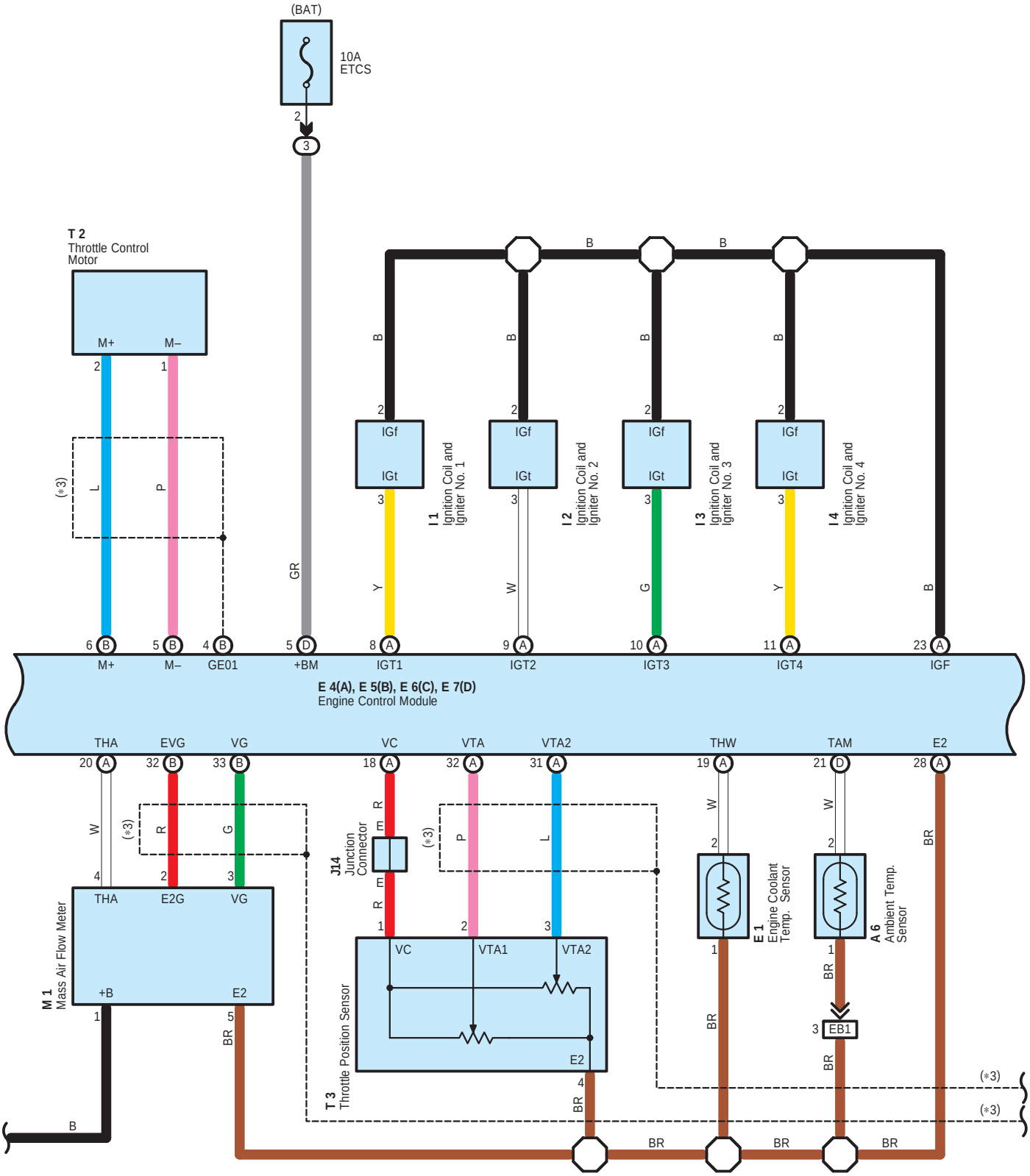
(BAT)
10A
ETCS
T 2
Throttle Control
Motor
M+
M–
(∗3)
GR
B
IGf
IGt
I 1 Ignition Coil and Igniter No. 1
I 2 Ignition Coil and Igniter No. 2
I 3 Ignition Coil and Igniter No. 3
I 4 Ignition Coil and Igniter No. 4
Y
W
G
M+
M–
GE01
+BM
IGT1
IGT2
IGT3
IGT4
IGF
E 4(A), E 5(B), E 6(C), E 7(D)
Engine Control Module
THA
EVG
VG
VC
VTA
VTA2
THW
TAM
E2
R
E
J14 Junction Connector
P
L
W
BR
M 1 Mass Air Flow Meter
+B
E2G
T 3 Throttle Position Sensor
VTA1
E 1 Engine Coolant Temp. Sensor
A 6 Ambient Temp. Sensor
EB1

[Details of Engine Control Module Section]

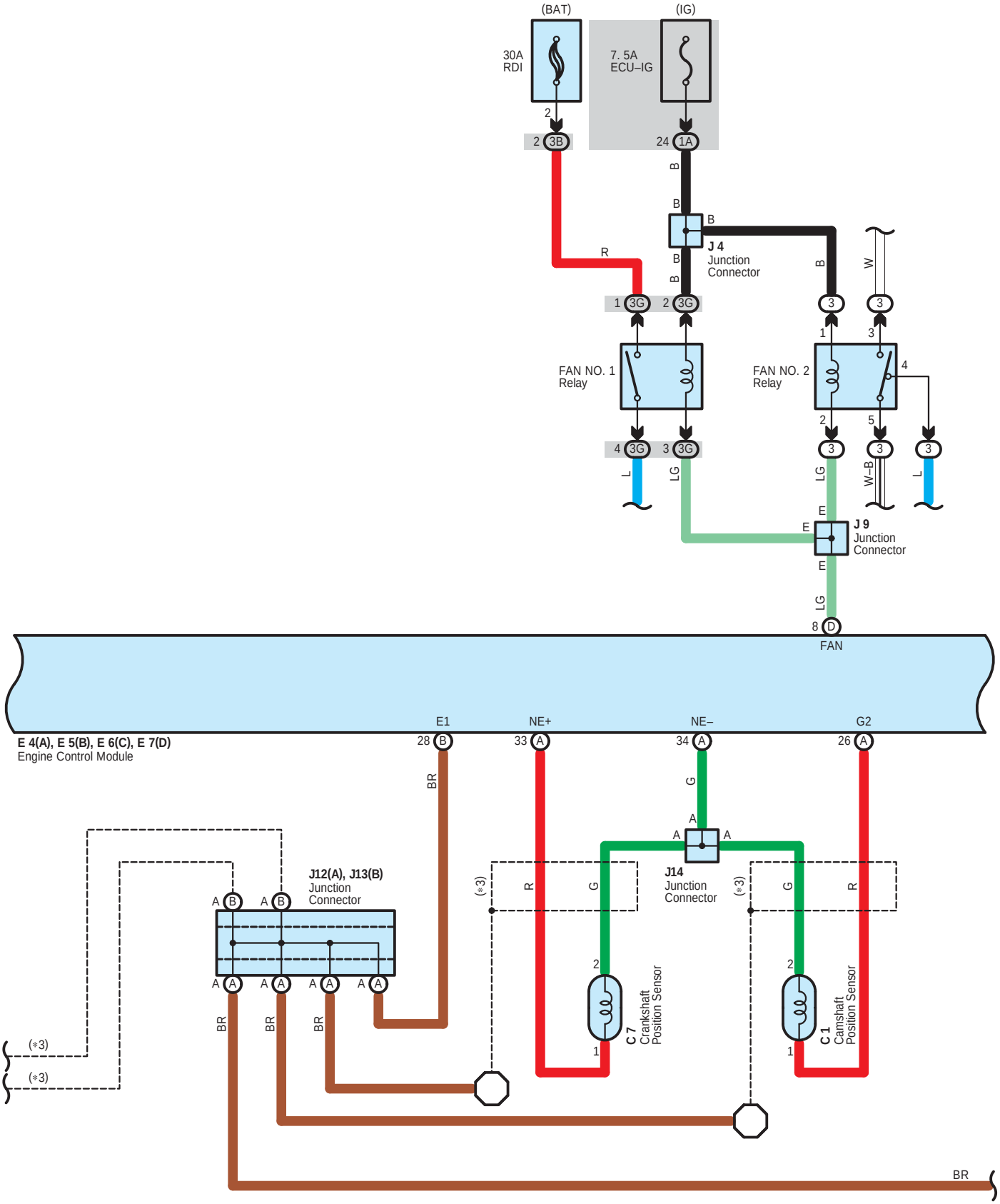

* 3 : Shielded

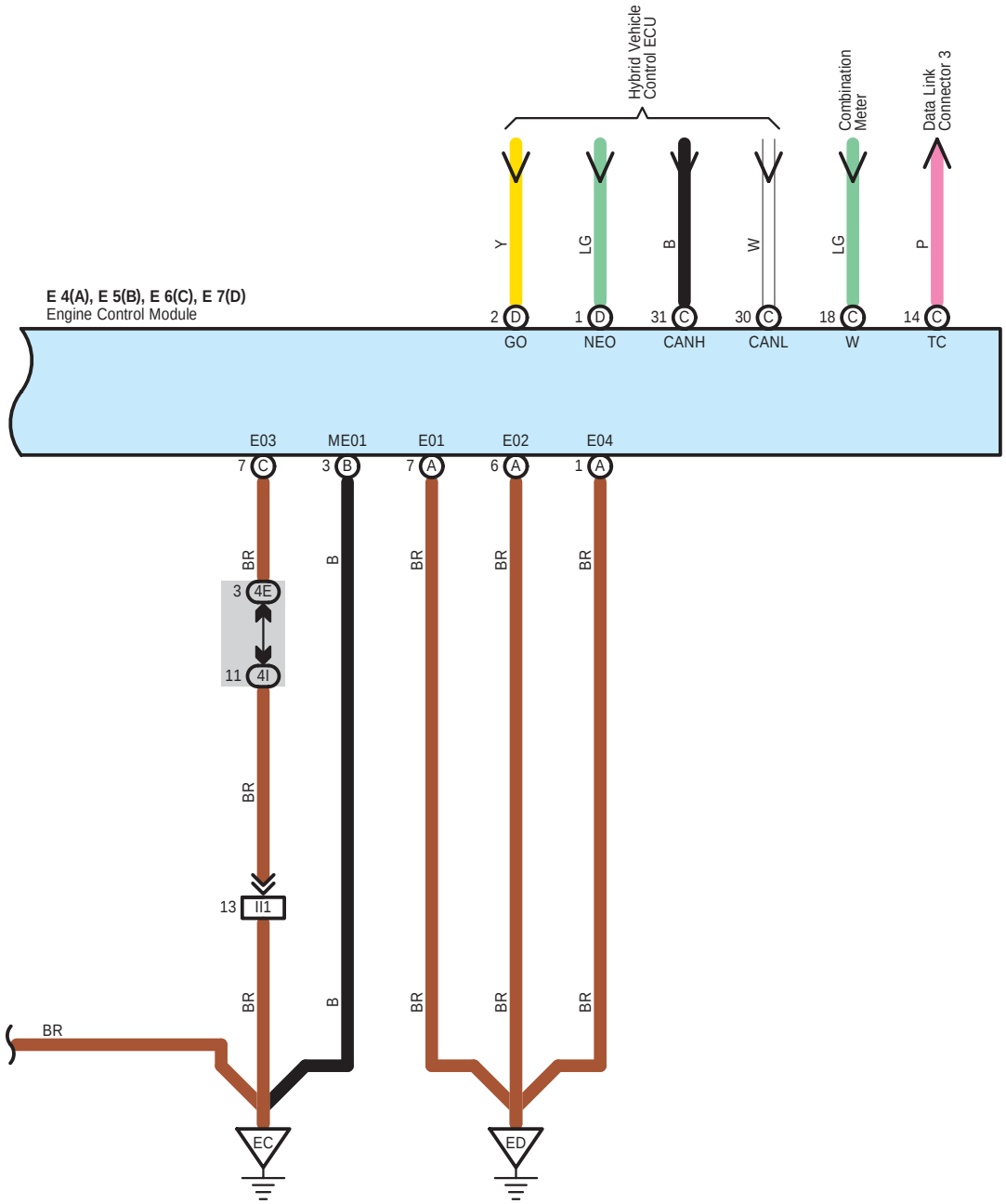
Hybrid Vehicle Control ECU
Combination Meter
Data Link Connector 3
Y
LG
B
W
LG
P
E 4(A), E 5(B), E 6(C), E 7(D)
Engine Control Module
2 D GO
1 D NEO
31 C CANH
30 C CANL
18 C W
14 C TC
E03
ME01
E01
E02
E04
7 C
3 B
7 A
6 A
1 A
BR
B
3 4E
11 4I
13 I1
EC
ED

[Details of Skid Control ECU Section]

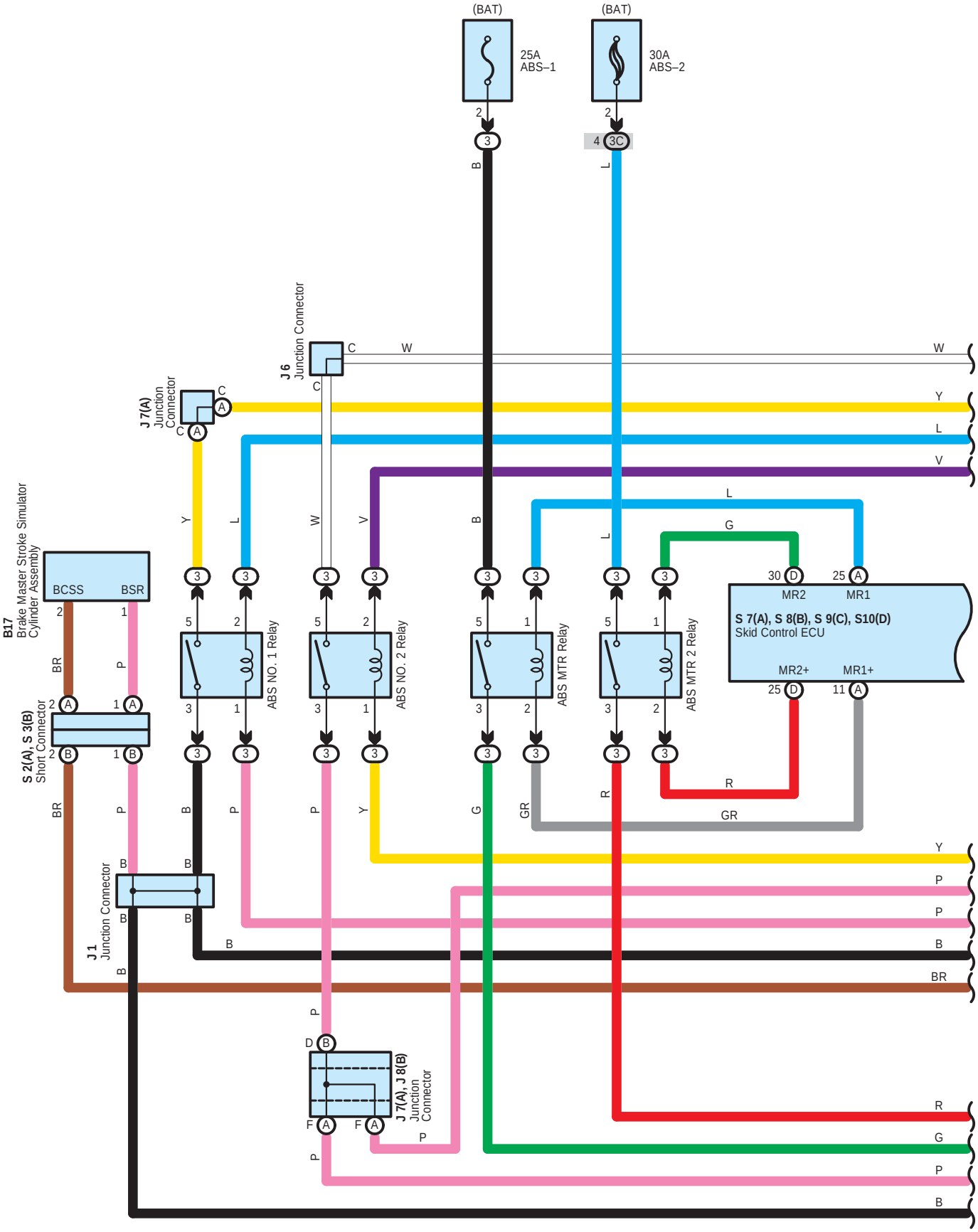

∗ 3 : Shielded

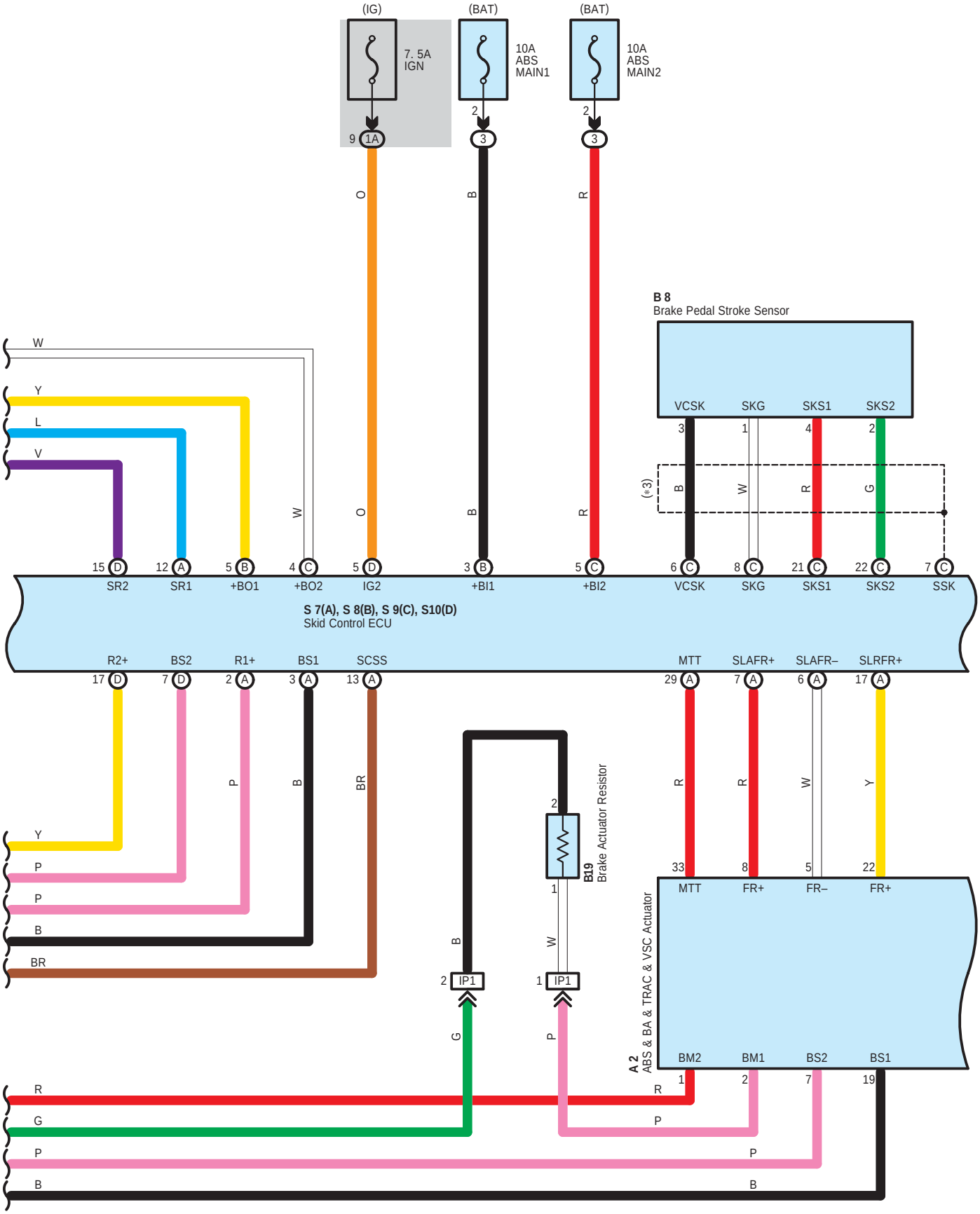
(IG)
(BAT)
(BAT)
7. 5A
IGN
10A
ABS
MAIN1
10A
ABS
MAIN2
9 1A
2
3
2
3
O
B
R
B 8
Brake Pedal Stroke Sensor
VCSK
SKG
SKS1
SKS2
(∗3)
W
Y
L
V
15 D SR2
12 A SR1
5 B +BO1
4 C +BO2
5 D IG2
3 B +BI1
5 C +BI2
6 C VCSK
8 C SKG
21 C SKS1
22 C SKS2
7 C SSK
S 7(A), S 8(B), S 9(C), S10(D)
Skid Control ECU
R2+
BS2
R1+
BS1
SCSS
17 D
7 D
2 A
3 A
13 A
P
B
BR
Y
P
P
B
BR
B19
Brake Actuator Resistor
2
1
IP1
IP1
G
P
MTT
SLAFR+
SLAFR–
SLRFR+
29 A
7 A
6 A
17 A
R
R
W
Y
33
8
5
22
MTT
FR+
FR–
FR+
A 2
ABS & BA & TRAC & VSC Actuator
BM2
BM1
BS2
BS1
1
2
7
19
R
G
P
B
P
P
B

[Details of Skid Control ECU Section]

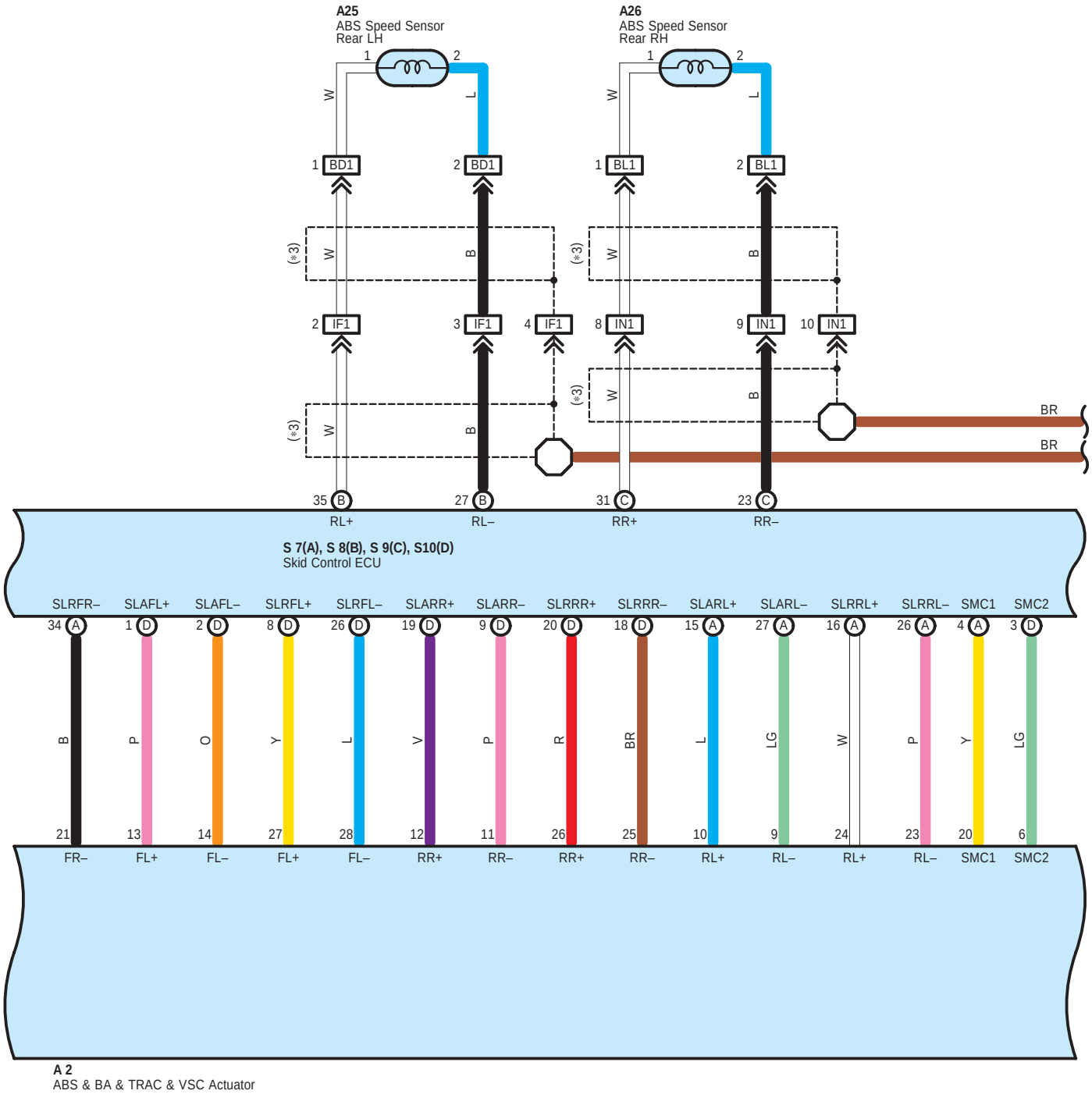

∗ 3 : Shielded

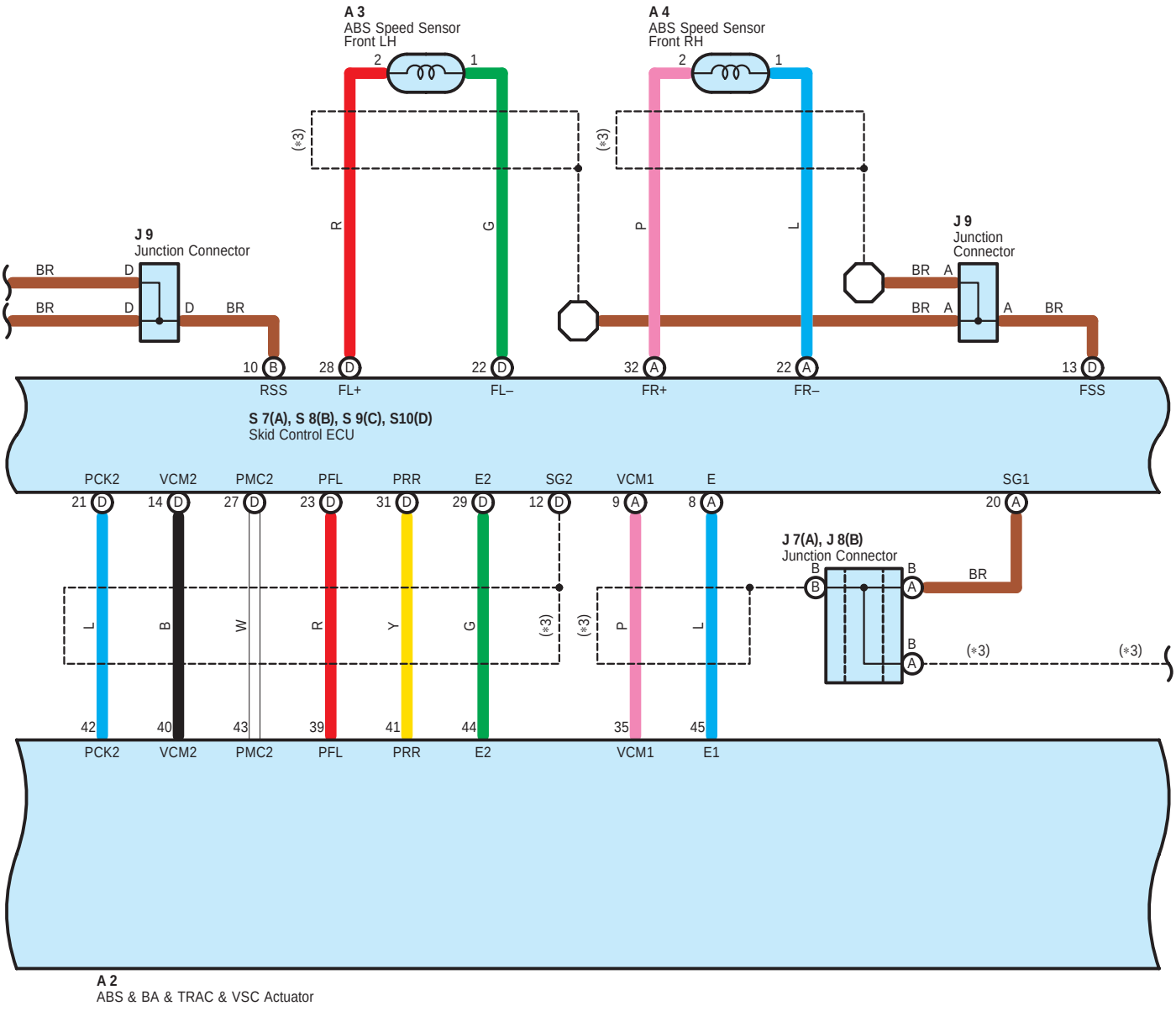
A 3
ABS Speed Sensor
Front LH
A 4
ABS Speed Sensor
Front RH
J 9
Junction Connector
J 9
Junction
Connector
S 7(A), S 8(B), S 9(C), S10(D)
Skid Control ECU
J 7(A), J 8(B)
Junction Connector
A 2
ABS & BA & TRAC & VSC Actuator
RSS
FL+
FL–
FR+
FR–
FSS
PCK2
VCM2
PMC2
PFL
PRR
E2
SG2
VCM1
E
SG1
E1

[Details of Skid Control ECU Section]

∗ 3 : Shielded

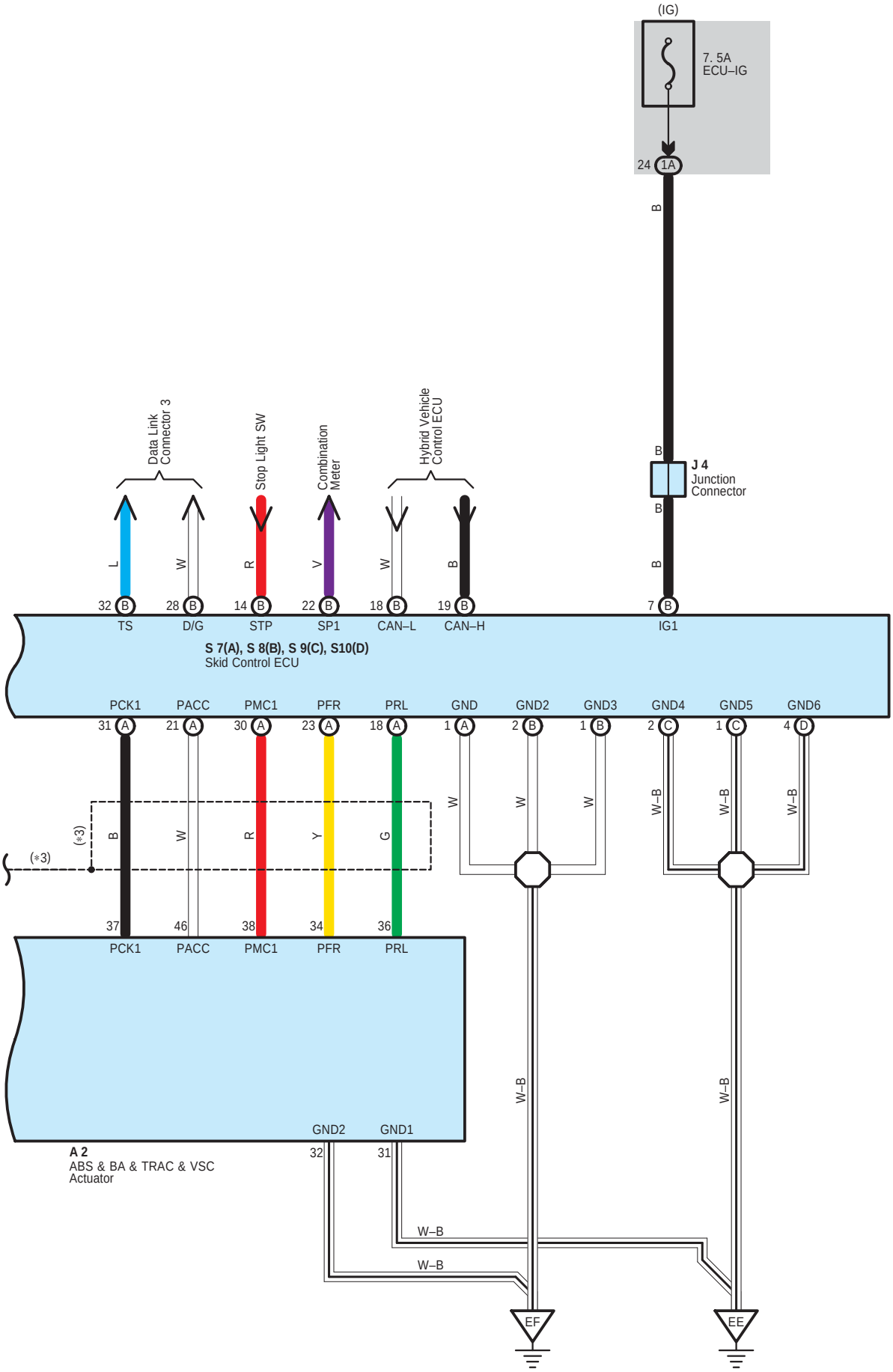

System Outline

This system controls the following modes in order to achieve the most efficient operations to match the driving conditions.

1. Motor Generator Condition

(1) Supply of electrical power from the HV battery to motor generator no.2 provides force to drive the wheels.

(2) While the tires are driven by the engine via the planetary gears, motor generator no.1 activates to supply electricity via the planetary gears to motor generator no.2 to drive the wheels.

(3) When the vehicle is decelerating, kinetic energy from the wheels is recovered into electrical energy and used to recharge the HV battery by motor generator no.2.

The hybrid vehicle control ECU switches between these modes (1, 2, 1+2, or 3) according to the driving conditions. However, when the state of charge of the HV battery is low, the HV battery is charged by the engine turning motor generator no.1.

2. Inverter

* The inverter converts high–voltage direct current of HV battery to three–phase alternating current for driving motor generator no.1 and motor generator no.2.
* The activation of the power transistors is controlled by the HV ECU. In addition, the inverter transmits necessary information for current control, such as the output amperage or voltage, to the HV ECU.
* Along with motor generator no.1 and motor generator no.2, the inverter is cooled by the exclusive radiator of the coolant system that is separated from that of the engine.
* In vehicle collision, circuit breaker sensor installed in the inverter outputs collision signal to stop the system.
* Boost converter has been adopted in the inverter, which increases rated voltage output from HV battery of DC 201.6V to DC 500V. After increasing voltage, the inverter converts direct current to alternating current.

3. Converter

The power source for auxiliary equipment of the vehicle such as the lights, audio system, and the air conditioning system, as well as the ECUs, is based on a rated voltage of DC 12V system. Because the generator outputs at DC 201.6V, the converter is used to transform the voltage from rated voltage of DC 201.6V to DC 12V in order to recharge the auxiliary battery. The converter is installed on the underside of the inverter.

4. HV Battery

* In Prius, the sealed nickel hydride (Ni–MH) battery has been adopted. This HV battery has high power density, lightweight and longevity to match characteristics of TOYOTA hybrid system. Because TOYOTA hybrid system controls charge/discharge to maintain charge/discharge control to maintain SOC (State of charge) at constant level while the vehicle is operating normally, it does not have to rely on the use of external recharges.
* The HV battery, battery ECU, system main relay and the cooling fan are put in a signal case which is placed in the luggage compartment behind the rear seat to make more effective use of vehicle space.
* A service plug that shuts off circuit is provided in the middle of the 28 modules (Rated battery capacity = 201.6V). Before servicing any portion of the high–voltage circuits, make sure to remove the service plug.
  Please do not READY ON when you remove the service plug. There is a possibility that battery ECU breaks down.
* To ensure the HV battery's performance, the battery ECU controls the operation of the cooling fan to avoid the heat that is generated in the HV battery during charging and discharging.

5. Regenerative System Operation

This system operates the motor as a generator to change the kinetic energy of the vehicle into the electricity when accel pedal is released or foot braking decelerates the vehicle speed, and store the electricity in the battery.

○ : **Parts Location**

Code	See Page	Code	See Page	Code	See Page
A2	46	H16 C	49	M1	47
A3	46	H17 D	49	M2 A	47
A4	46	H20 D	53	M3 B	47
A6	46	H21 E	53	M4 C	47
A7 A	48	I1	47	M5 D	47
A8 B	48	I2	47	M6 A	47
A9	48	I3	47	M7 B	47
A13	48	I4	47	M8 C	47
A18	48	I5	47	M9 D	47
A25	52	I6	47	M10 E	47
A26	52	I7	47	M13	50
B5 A	48	I8	47	P6	51
B8	48	I9 A	47	P8	51
B9	52	I10 B	47	P11	51
B10	52	I12 D	47	S1	47
B11 A	52	I13 E	47	S2 A	47
B12 B	52	I14 G	47	S3 B	47
B13 C	52	I15 H	47	S4 A	51
B14	52	I16 I	47	S5 B	51
B17	46	I17	53	S7 A	51
B19	48	J1	47	S8 B	51
C1	46	J2	47	S9 C	51
C3	46	J3	47	S10 D	51
C5 A	46	J4	47	S11	51
C6 B	46	J5	50	S16	51
C7	46	J6	50	S22 A	55
C10	49	J7 A	50	S23 B	55
D1	49	J8 B	50	S24 C	55
D7	52	J9	50	S25 D	55
E1	46	J12 A	50	S26 E	55
E4 A	49	J13 B	50	S27 A	47
E5 B	49	J14	50	S28 B	47
E6 C	49	J15	50	T2	47
E7 D	49	J16	50	T3	47
F14	53	J17	50	T4	51
F15 A	28, 53	J18	50	T5	51
F16 B	28, 53	J24	50	T11	51
G1	49	J25	50	W3	47
H14 A	49	J30	53		
H15 B	49	J32	53		

⬭ : **Relay Blocks**

Code	See Page	Relay Blocks (Relay Block Location)
3	22	Engine Room R/B (Engine Compartment Left)

: **Junction Block and Wire Harness Connector**

Code	See Page	Junction Block and Wire Harness (Connector Location)
1A	30	Engine Room Main Wire and Driver Side J/B (Lower Finish Panel)
1C		
1D	30	Floor Wire and Driver Side J/B (Lower Finish Panel)
1E	30	Instrument Panel Wire and Driver Side J/B (Lower Finish Panel)
1F		
1G		
1L	31	
1M		
1N		
3B	23	Engine Room Main Wire and Engine Room J/B (Engine Compartment Left)
3C		
3E		
3G	24	
3I		
3J		
3M	23	Frame Wire and Engine Room J/B (Engine Compartment Left)
4C	38	Instrument Panel Wire and Center Connector No.1 (Behind the Combination Meter)
4D		
4E		
4F		
4G		
4H		
4I		
4J		
4K		
4L		
5C	42	Instrument Panel Wire and Center Connector No.2 (Instrument Panel Brace RH)
5D		
5E		
5F		
5G		
5H		
5J		
5K		
5L		
5M		
5N		

: Connector Joining Wire Harness and Wire Harness

Code	See Page	Joining Wire Harness and Wire Harness (Connector Location)
EB1	56	Engine Wire and Engine Room Main Wire (Inside of the Engine Room R/B)
IA1	58	Engine Room Main Wire and Instrument Panel Wire (Upper Parts of Front Body Pillar LH)
IA2		
IA3		
IC1	58	Engine Room Main Wire and Floor Wire (Cowl Side Panel LH)
ID3	58	Instrument Panel Wire and Floor Wire (Left Kick Panel)
ID4		
IF1	58	Floor Wire and Engine Room Main Wire (Left Kick Panel)
IG1	59	Instrument Panel Wire and Instrument Panel No.2 Wire (Behind the Combination Meter)
IG2		
II1	59	Engine Wire and Instrument Panel Wire (Behind the Glove Box)
IN1	59	Floor No.2 Wire and Engine Room Main Wire (Right Kick Panel)
IP1	59	Engine Room No.2 Wire and Engine Room Main Wire (Upper Parts of Front Body Pillar LH)
BD1	60	Skid Control Sensor No.1 Wire and Floor Wire (Front Side of Left Quarter Panel)
BE1	60	Frame Wire and Floor No.2 Wire (Front Side of Left Quarter Panel)
BL1	61	Skid Control Sensor No.2 Wire and Floor No.2 Wire (Front Side of Right Quarter Panel)
BM1	61	Floor No.2 Wire and Floor Wire (Rear Side of Right Quarter Panel)

: Ground Points

Code	See Page	Ground Points Location
EC	56	Engine Block
ED		
EE	56	Left Side of the Suspension Tower
EF		
IH	58	Cowl Side Panel LH
II	58	Instrument Panel Brace LH
IK	58	Cowl Side Panel RH
BL	60	Rear Side of Left Quarter Panel
BQ	60	Rear Side of Right Quarter Panel

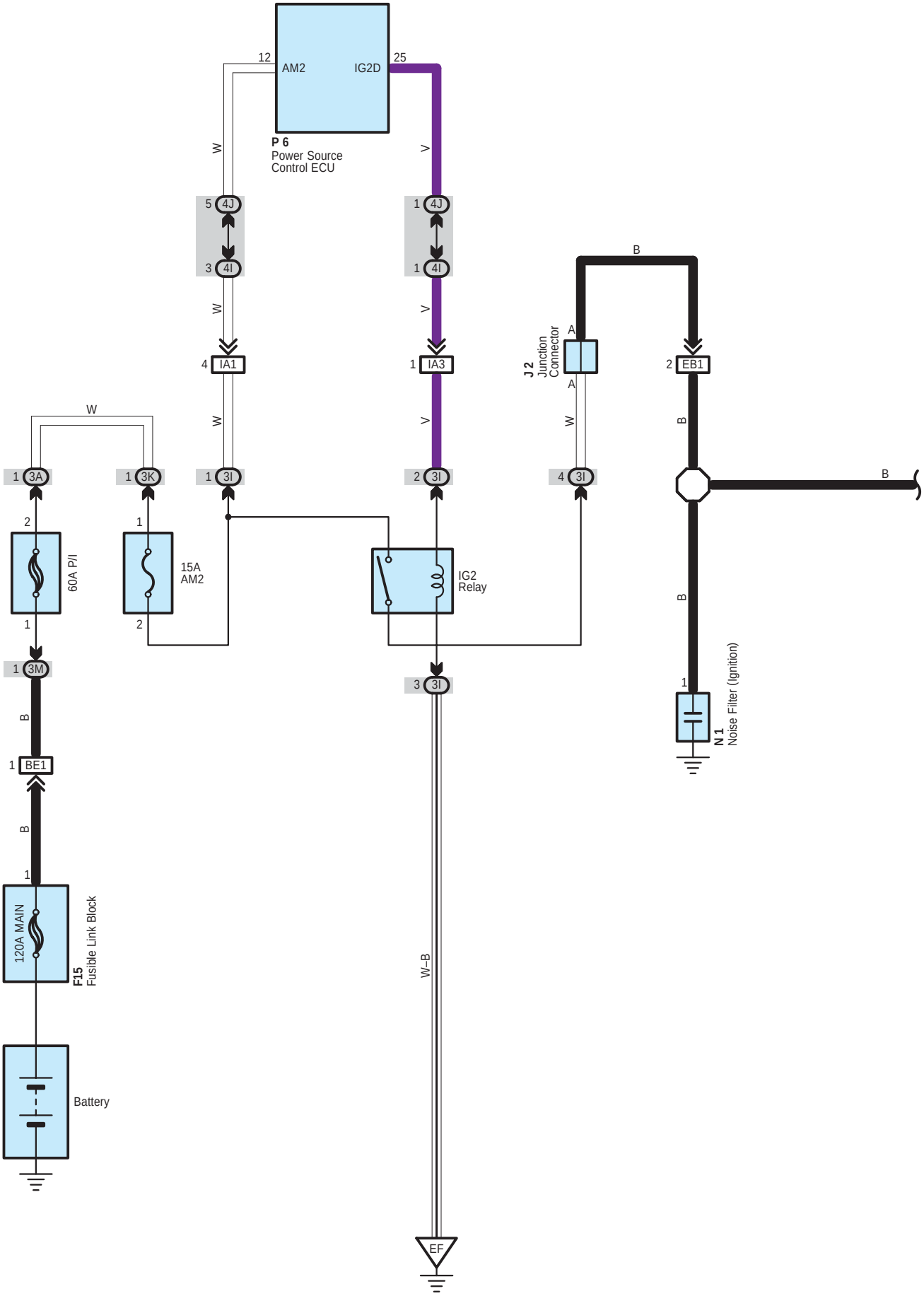
12
AM2
IG2D
25
P 6
Power Source
Control ECU
W
V
5 4J
3 4I
1 4J
1 4I
W
V
4 IA1
1 IA3
W
V
J 2
Junction
Connector
A
A
B
2 EB1
W
B
B
1 3A
1 3K
1 3I
2 3I
4 3I
W
2
1
60A P/I
15A
AM2
IG2
Relay
B
B
1
2
1 3M
3 3I
B
1 BE1
B
1
120A MAIN
F15
Fusible Link Block
Battery
W–B
N 1
Noise Filter (Ignition)
EF

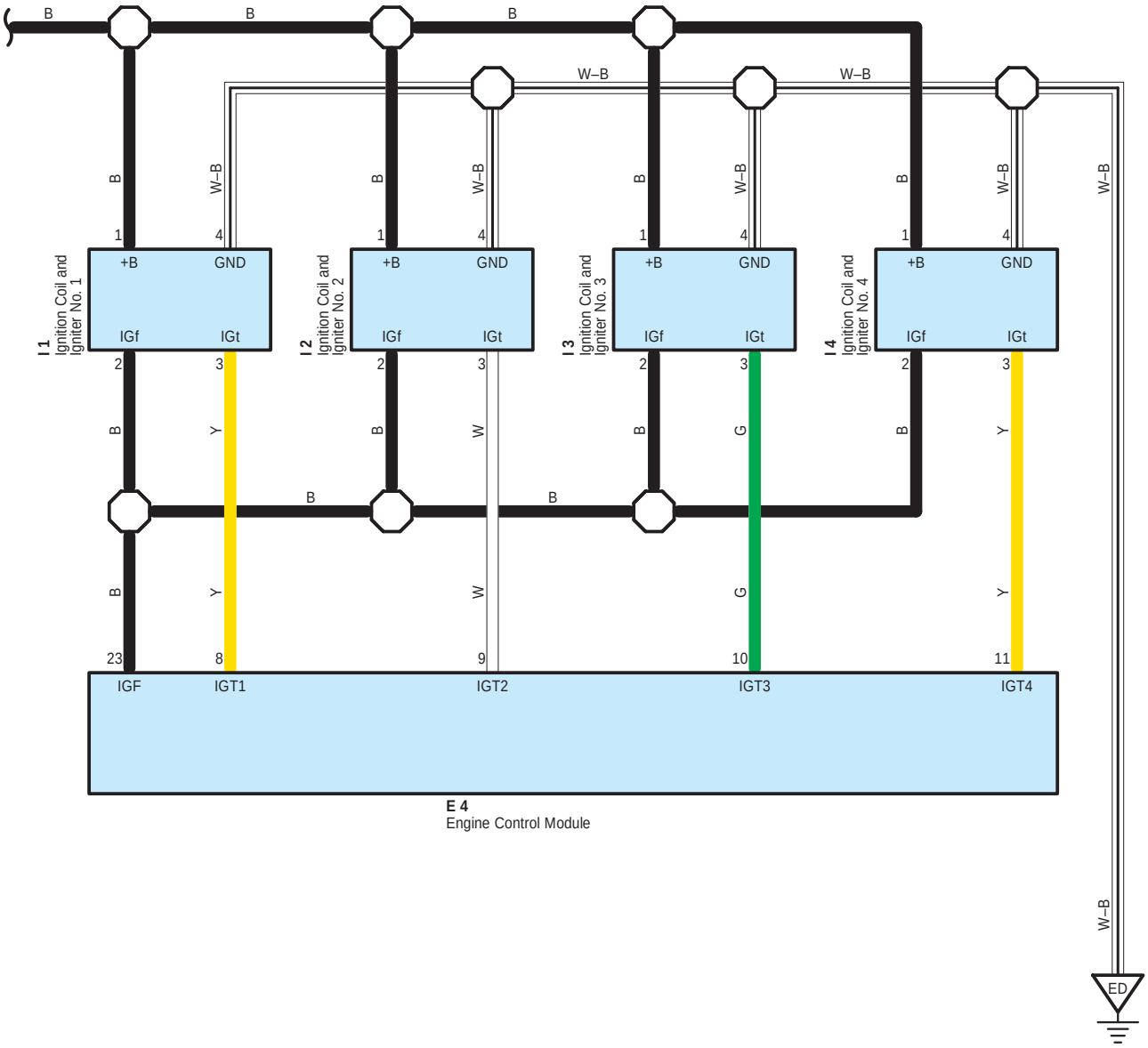
B
B
B
W–B
W–B
W–B
I 1
Ignition Coil and Igniter No. 1
I 2
Ignition Coil and Igniter No. 2
I 3
Ignition Coil and Igniter No. 3
I 4
Ignition Coil and Igniter No. 4
+B
GND
IGf
IGt
1
2
3
4
B
Y
W
G
23
8
9
10
11
IGF
IGT1
IGT2
IGT3
IGT4
E 4
Engine Control Module
ED

○ : Parts Location

Code	See Page	Code	See Page	Code	See Page
E4	49	I2	47	J2	47
F15	28, 53	I3	47	N1	47
I1	47	I4	47	P6	51

⬭ : Junction Block and Wire Harness Connector

Code	See Page	Junction Block and Wire Harness (Connector Location)
3A	23	Engine Room Main Wire and Engine Room J/B (Engine Compartment Left)
3I	24	
3K		
3M	23	Frame Wire and Engine Room J/B (Engine Compartment Left)
4I	38	Instrument Panel Wire and Center Connector No.1 (Behind the Combination Meter)
4J		

▭ : Connector Joining Wire Harness and Wire Harness

Code	See Page	Joining Wire Harness and Wire Harness (Connector Location)
EB1	56	Engine Wire and Engine Room Main Wire (Inside of the Engine Room R/B)
IA1	58	Engine Room Main Wire and Instrument Panel Wire (Upper Parts of Front Body Pillar LH)
IA3		
BE1	60	Frame Wire and Floor No.2 Wire (Front Side of Left Quarter Panel)

▽ : Ground Points

Code	See Page	Ground Points Location
ED	56	Engine Block
EF	56	Left Side of the Suspension Tower

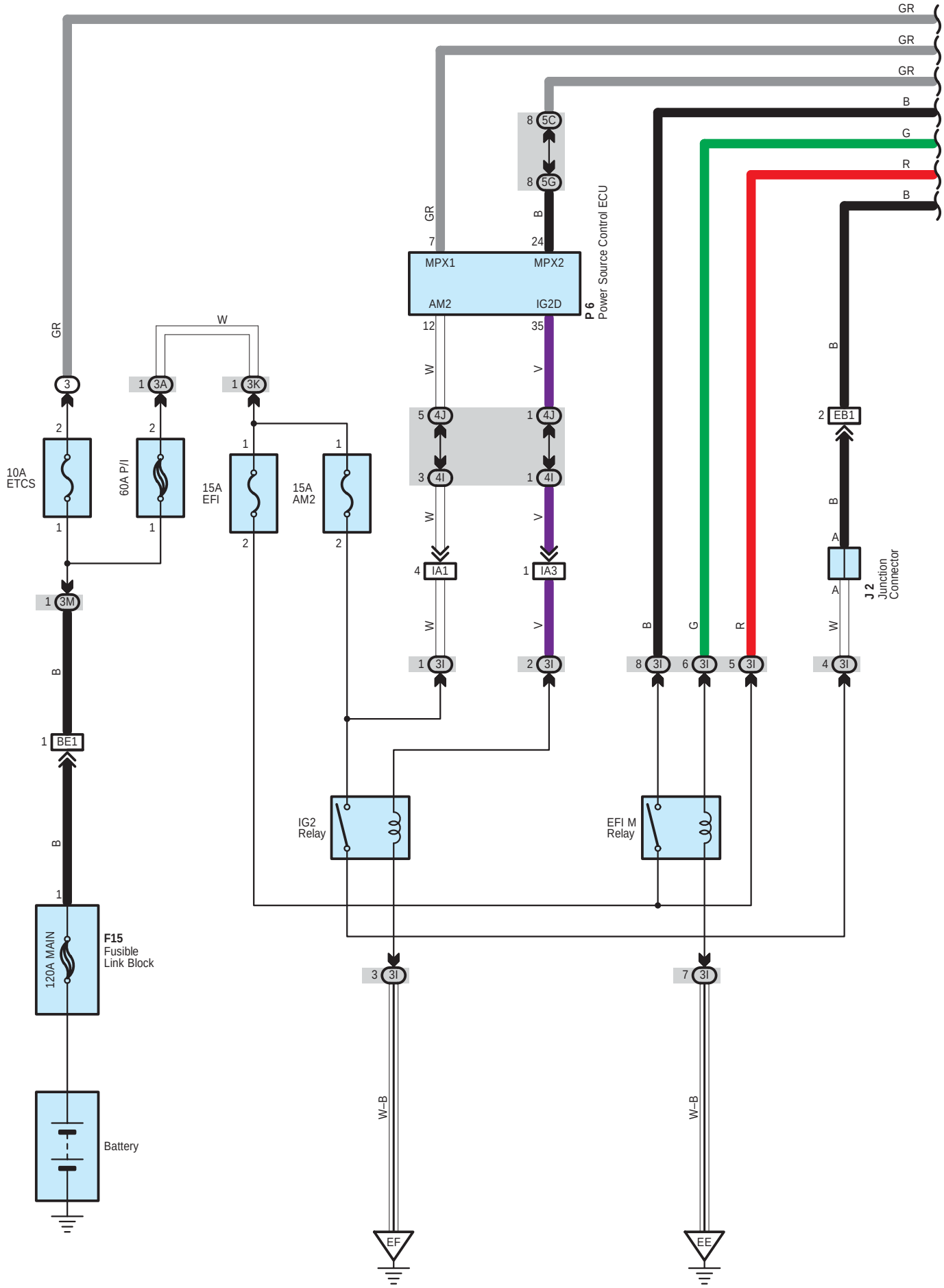
GR
GR
GR
B
G
R
B
8 5C
8 5G
B
24
GR
7
MPX1
MPX2
AM2
IG2D
P 6
Power Source Control ECU
12
35
W
V
5 4J
1 4J
3 4I
1 4I
W
V
4 IA1
1 IA3
W
V
1 3I
2 3I
8 3I
6 3I
5 3I
4 3I
B
G
R
W
B
2 EB1
B
A
A
J 2
Junction Connector
GR
W
3
1 3A
1 3K
2
2
2
1
1
1
10A
ETCS
60A P/I
15A
EFI
15A
AM2
1
1
2
2
1 3M
B
1 BE1
B
1
120A MAIN
F15
Fusible
Link Block
Battery
IG2
Relay
EFI M
Relay
3 3I
7 3I
W–B
W–B
EF
EE

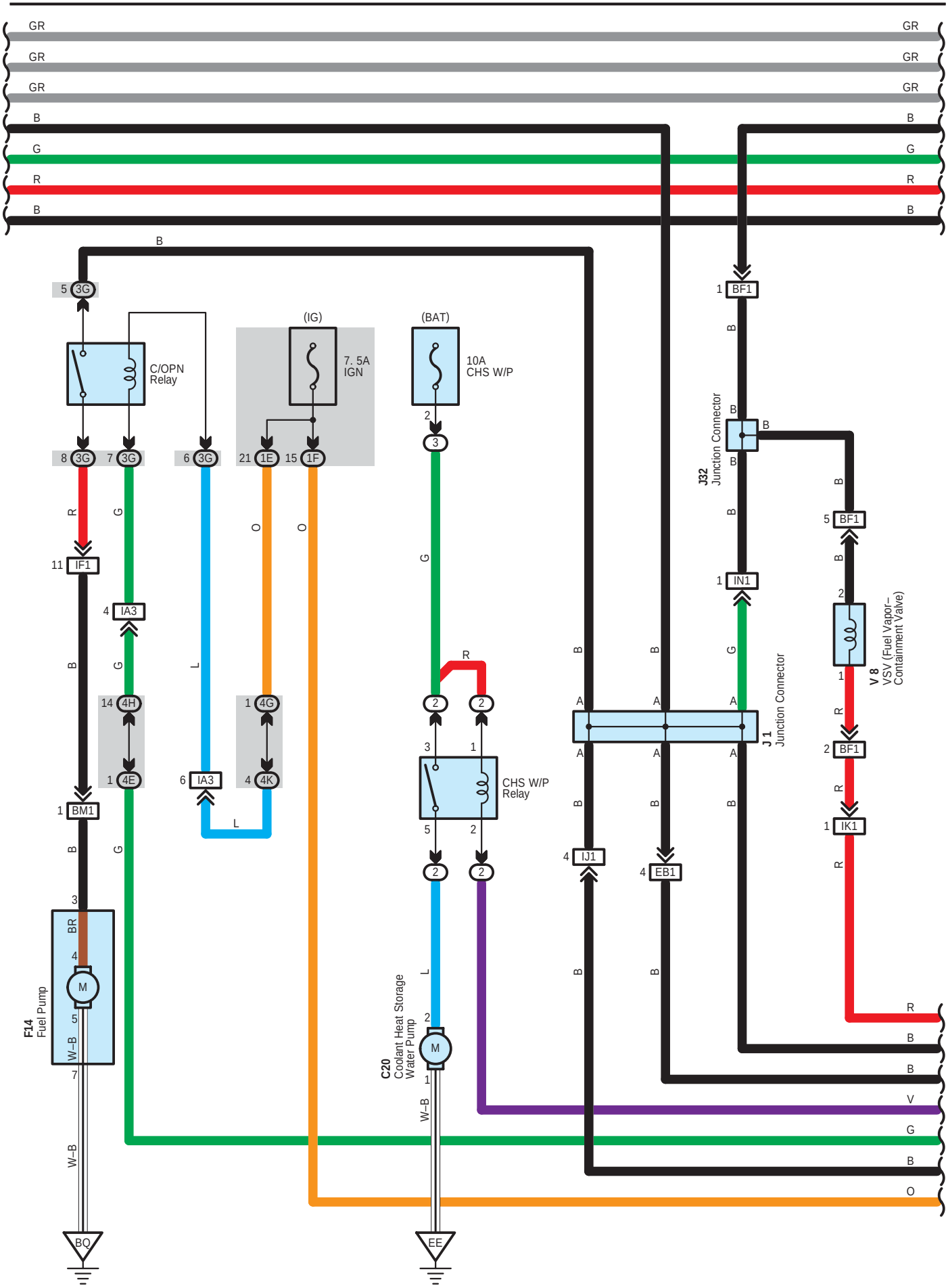
GR
GR
GR
B
G
R
B
C/OPN Relay
(IG)
7. 5A IGN
(BAT)
10A CHS W/P
CHS W/P Relay
J32 Junction Connector
J1 Junction Connector
V8 VSV (Fuel Vapor–Containment Valve)
F14 Fuel Pump
C20 Coolant Heat Storage Water Pump
5 3G
8 3G
7 3G
6 3G
21 1E
15 1F
11 IF1
4 IA3
14 4H
1 4E
1 BM1
6 IA3
1 4G
4 4K
1 BF1
1 IN1
5 BF1
2 BF1
1 IK1
4 IJ1
4 EB1
BQ
EE
W–B
BR
L
O
V

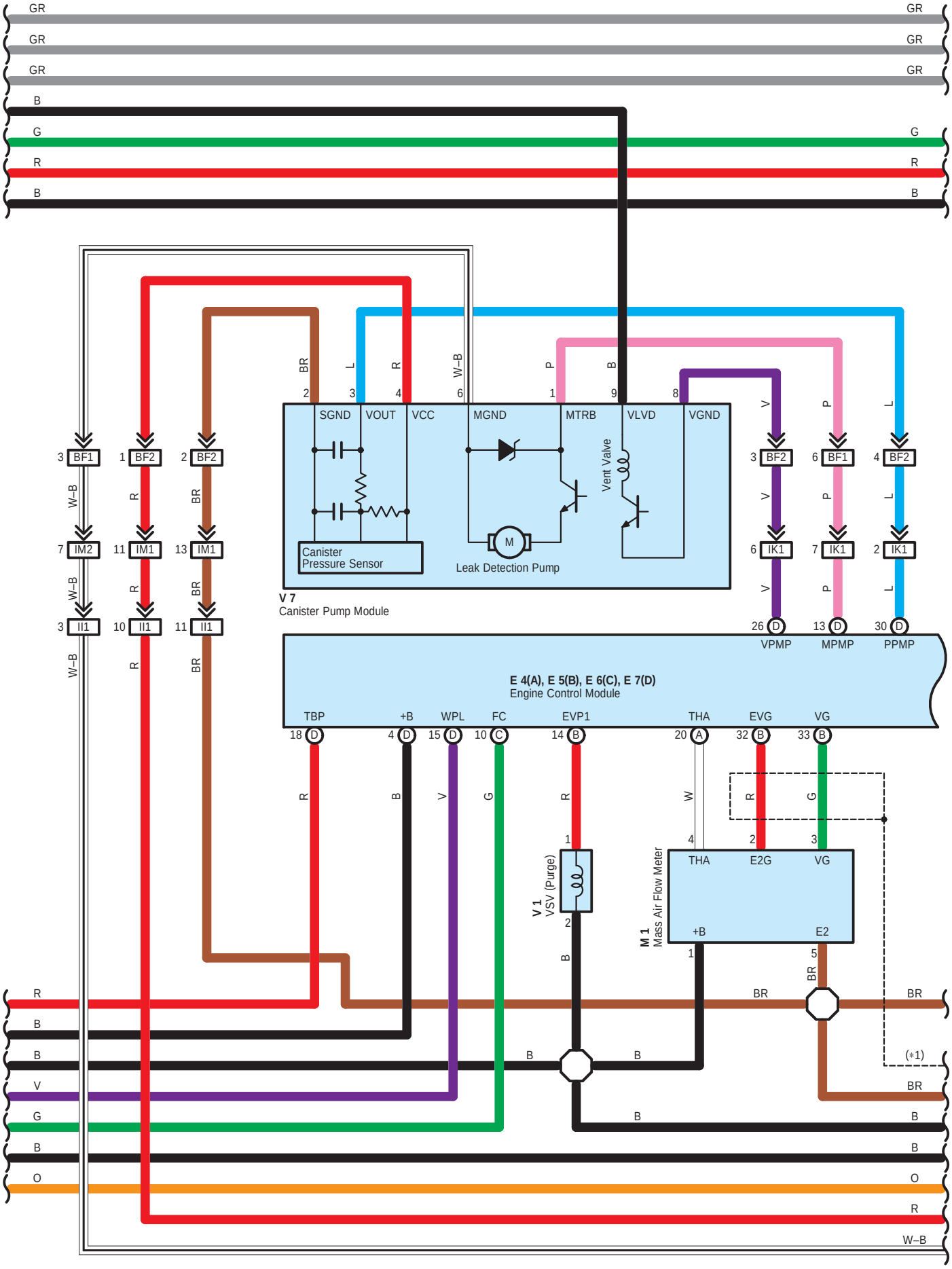
GR
GR
GR
B
G
R
B
SGND
VOUT
VCC
MGND
MTRB
VLVD
VGND
Canister Pressure Sensor
Leak Detection Pump
Vent Valve
V 7
Canister Pump Module
BF1
BF2
IM2
IM1
II1
IK1
VPMP
MPMP
PPMP
E 4(A), E 5(B), E 6(C), E 7(D)
Engine Control Module
TBP
+B
WPL
FC
EVP1
THA
EVG
VG
V 1
VSV (Purge)
M 1
Mass Air Flow Meter
E2G
E2
W–B
(*1)

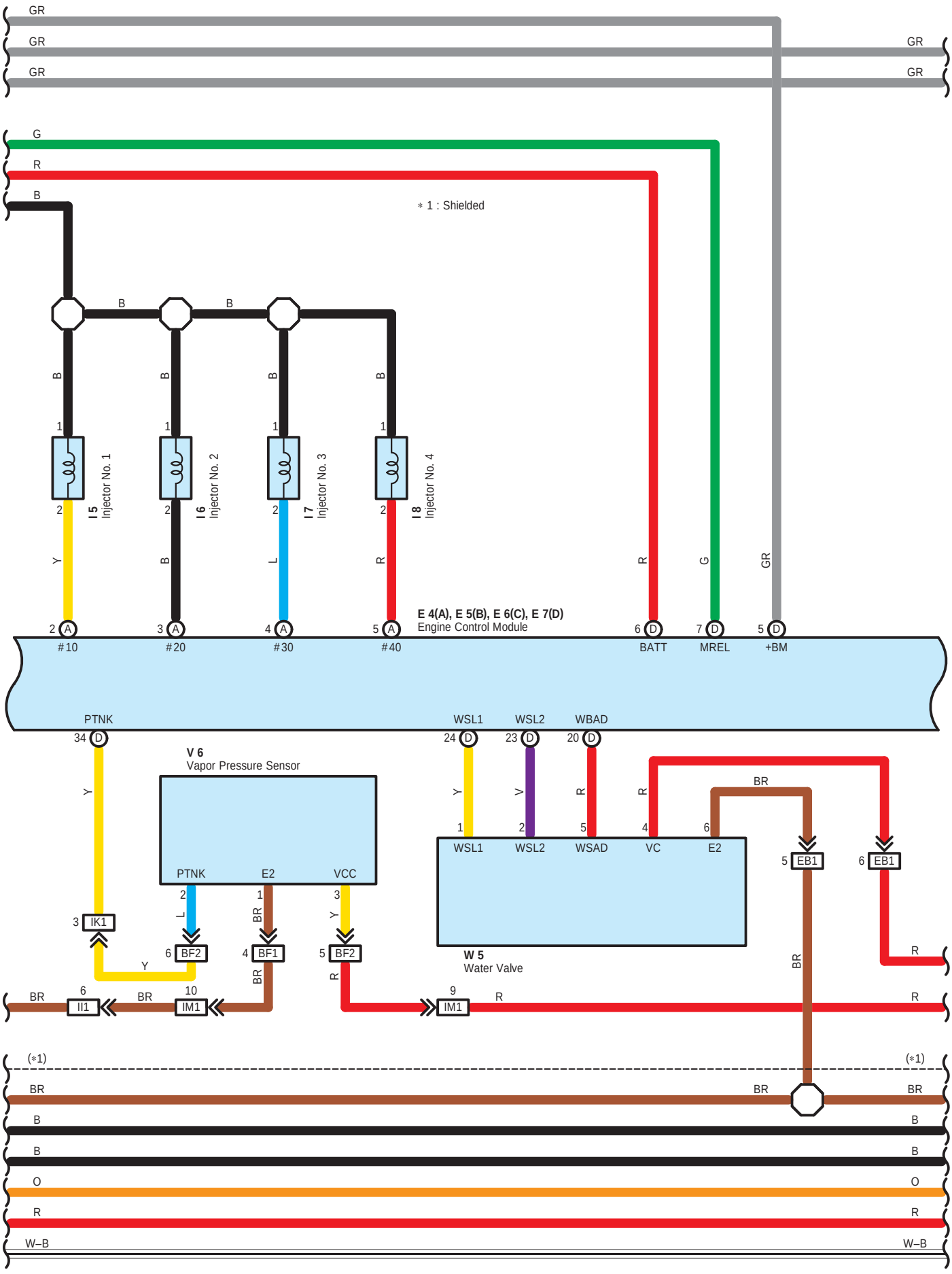
GR
GR
GR
GR
GR
G
R
B
* 1 : Shielded
B
B
B
B
B
B
B
B
1
1
1
1
2
2
2
2
I 5
Injector No. 1
I 6
Injector No. 2
I 7
Injector No. 3
I 8
Injector No. 4
Y
B
L
R
R
G
GR
2 A #10
3 A #20
4 A #30
5 A #40
E 4(A), E 5(B), E 6(C), E 7(D)
Engine Control Module
6 D BATT
7 D MREL
5 D +BM
PTNK
34 D
V 6
Vapor Pressure Sensor
PTNK
E2
VCC
2
1
3
L
BR
Y
3 IK1
6 BF2
4 BF1
5 BF2
Y
BR
R
BR
6 II1
BR
10 IM1
9 IM1
R
R
WSL1
WSL2
WBAD
24 D
23 D
20 D
Y
V
R
1
2
5
WSL1
WSL2
WSAD
R
4
VC
BR
6
E2
W 5
Water Valve
5 EB1
6 EB1
BR
R
(*1)
(*1)
BR
BR
BR
B
B
B
B
O
O
R
R
W–B
W–B

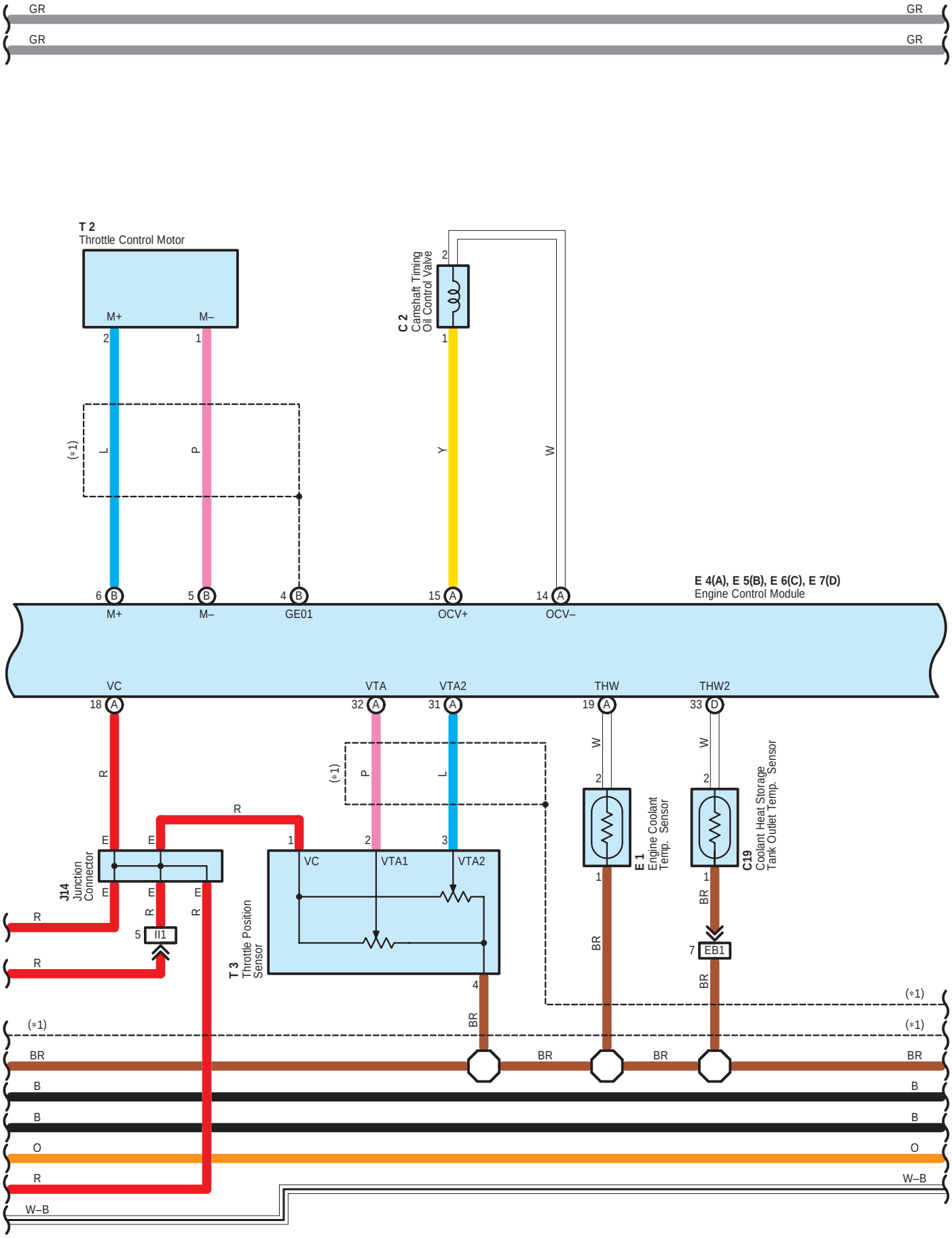
GR
GR
GR
GR
T 2
Throttle Control Motor
M+
M–
2
1
(*1)
L
P
C 2
Camshaft Timing
Oil Control Valve
2
1
Y
W
6 B
M+
5 B
M–
4 B
GE01
15 A
OCV+
14 A
OCV–
E 4(A), E 5(B), E 6(C), E 7(D)
Engine Control Module
VC
18 A
VTA
32 A
VTA2
31 A
THW
19 A
THW2
33 D
R
E
J14
Junction
Connector
5
II1
T 3
Throttle Position
Sensor
1
2
3
VC
VTA1
VTA2
4
BR
E 1
Engine Coolant
Temp. Sensor
C19
Coolant Heat Storage
Tank Outlet Temp. Sensor
7
EB1
(*1)
BR
B
O
W–B

∗ 1 : Shielded

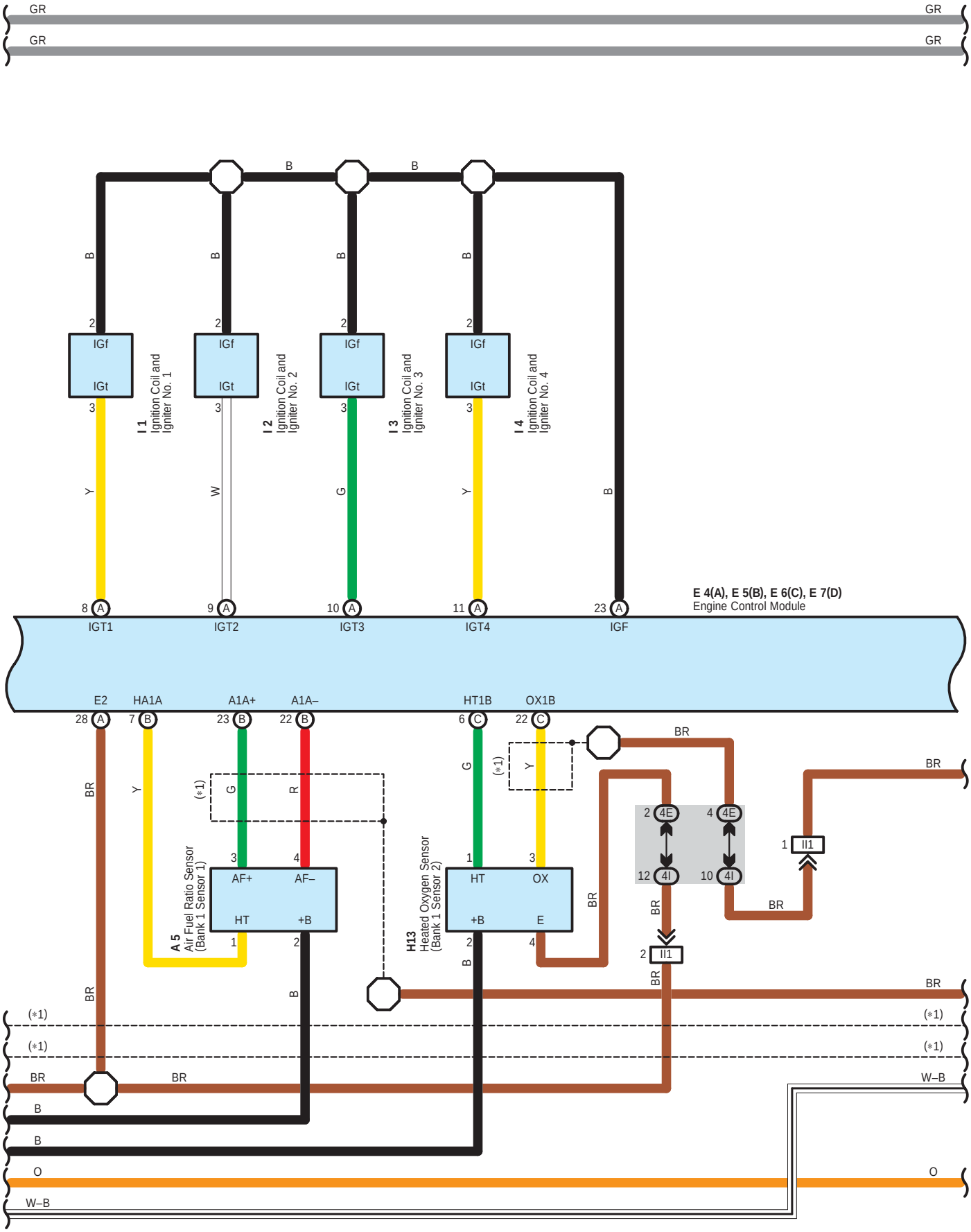
GR
GR
GR
GR
B
B
B
B
B
B
B
B
2
2
2
2
IGf
IGt
IGf
IGt
IGf
IGt
IGf
IGt
3
3
3
3
I 1
Ignition Coil and Igniter No. 1
I 2
Ignition Coil and Igniter No. 2
I 3
Ignition Coil and Igniter No. 3
I 4
Ignition Coil and Igniter No. 4
Y
W
G
Y
B
8 A
9 A
10 A
11 A
23 A
IGT1
IGT2
IGT3
IGT4
IGF
E 4(A), E 5(B), E 6(C), E 7(D)
Engine Control Module
E2
HA1A
A1A+
A1A–
HT1B
OX1B
28 A
7 B
23 B
22 B
6 C
22 C
BR
Y
G
R
G
Y
(∗1)
(∗1)
A 5
Air Fuel Ratio Sensor (Bank 1 Sensor 1)
AF+
AF–
HT
+B
H13
Heated Oxygen Sensor (Bank 1 Sensor 2)
HT
OX
+B
E
2 4E
4 4E
12 4I
10 4I
1 II1
2 II1
BR
BR
BR
BR
BR
BR
BR
B
B
B
B
O
O
W–B
W–B
(∗1)
(∗1)
(∗1)
(∗1)

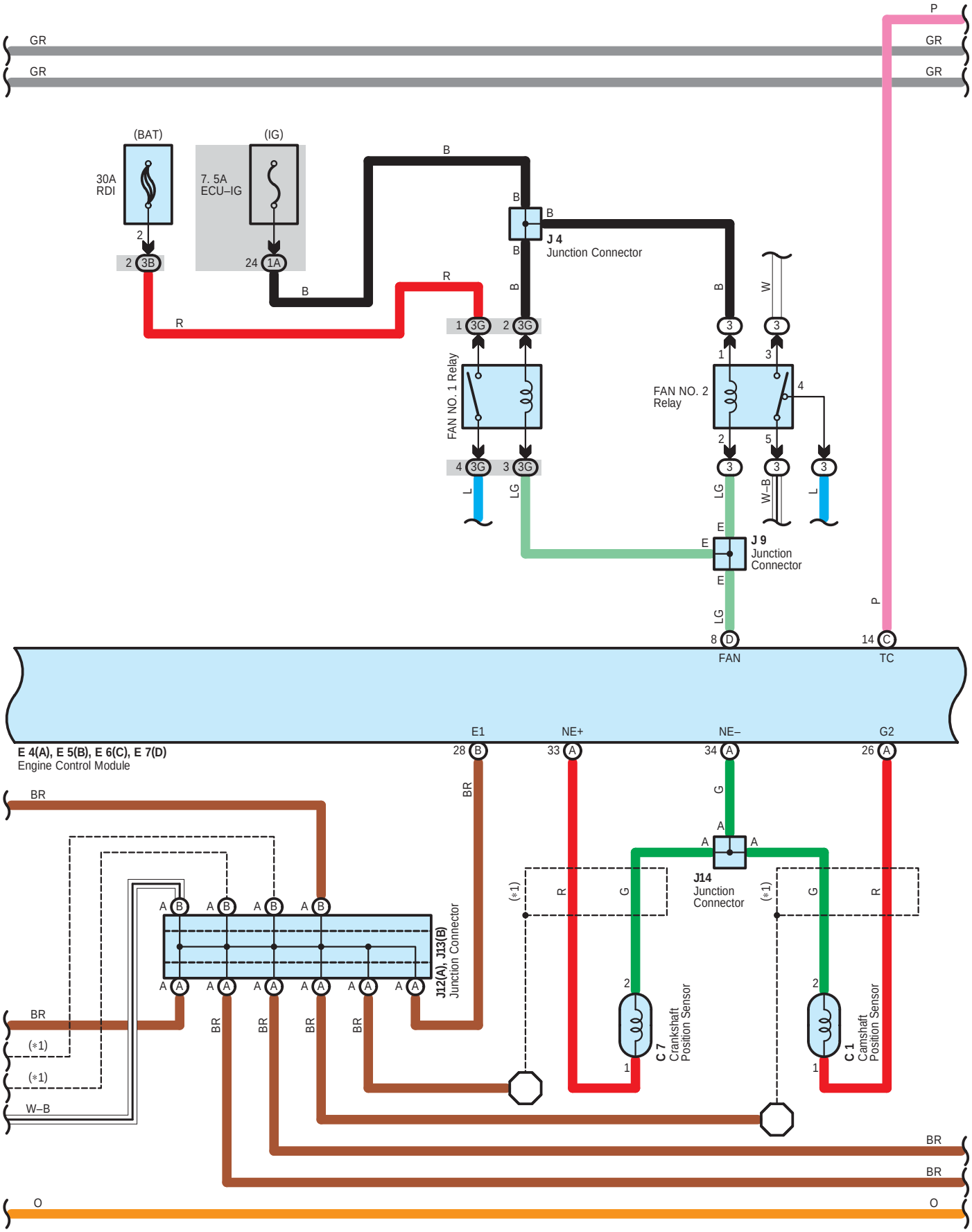
GR
GR
GR
GR
P
(BAT)
(IG)
30A
RDI
7. 5A
ECU–IG
2
2 3B
24 1A
B
B
B
B
B
J 4
Junction Connector
R
R
B
W
1 3G
2 3G
FAN NO. 1 Relay
4 3G
3 3G
L
LG
1
3
FAN NO. 2
Relay
4
2
5
3
W–B
L
LG
E
E
J 9
Junction
Connector
E
LG
8 D
FAN
14 C
TC
P
E 4(A), E 5(B), E 6(C), E 7(D)
Engine Control Module
E1
28 B
NE+
33 A
NE–
34 A
G2
26 A
BR
G
A
A
A
A
J14
Junction
Connector
(*1)
R
G
(*1)
G
R
J12(A), J13(B)
Junction Connector
2
1
C 7
Crankshaft
Position Sensor
2
1
C 1
Camshaft
Position Sensor
BR
(*1)
(*1)
W–B
BR
BR
BR
BR
BR
BR
O
O

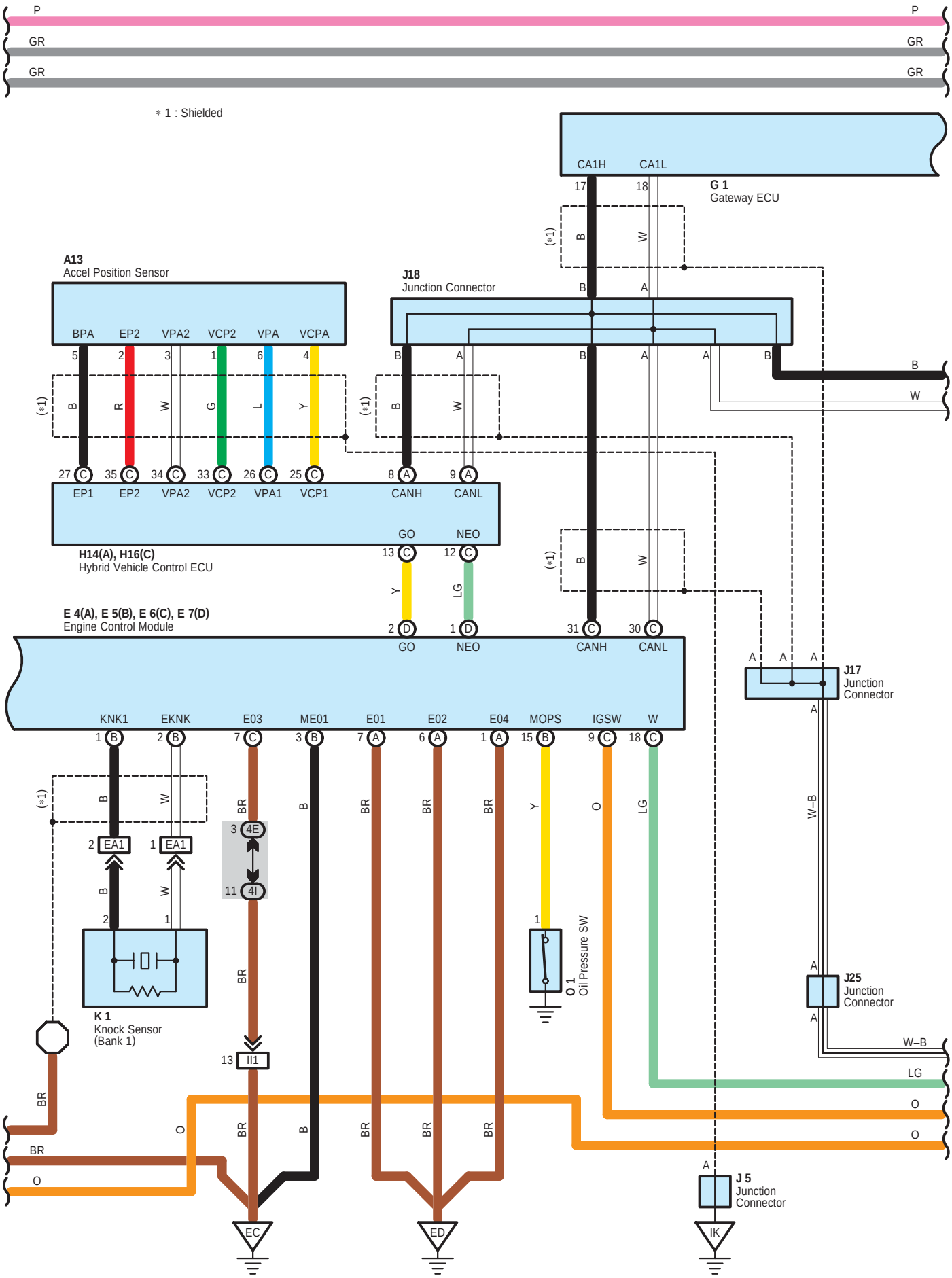
P
GR
GR
P
GR
GR
＊1 : Shielded
CA1H
CA1L
17
18
G 1
Gateway ECU
(＊1)
B
W
A13
Accel Position Sensor
J18
Junction Connector
BPA
EP2
VPA2
VCP2
VPA
VCPA
5
2
3
1
6
4
R
W
G
L
Y
27
35
34
33
26
25
EP1
EP2
VPA2
VCP2
VPA1
VCP1
8
9
CANH
CANL
GO
NEO
13
12
LG
H14(A), H16(C)
Hybrid Vehicle Control ECU
E 4(A), E 5(B), E 6(C), E 7(D)
Engine Control Module
2
1
31
30
J17
Junction
Connector
KNK1
EKNK
E03
ME01
E01
E02
E04
MOPS
IGSW
W
W–B
EA1
4E
4I
II1
K 1
Knock Sensor
(Bank 1)
O 1
Oil Pressure SW
J25
Junction
Connector
LG
O
BR
J 5
Junction
Connector
EC
ED
IK

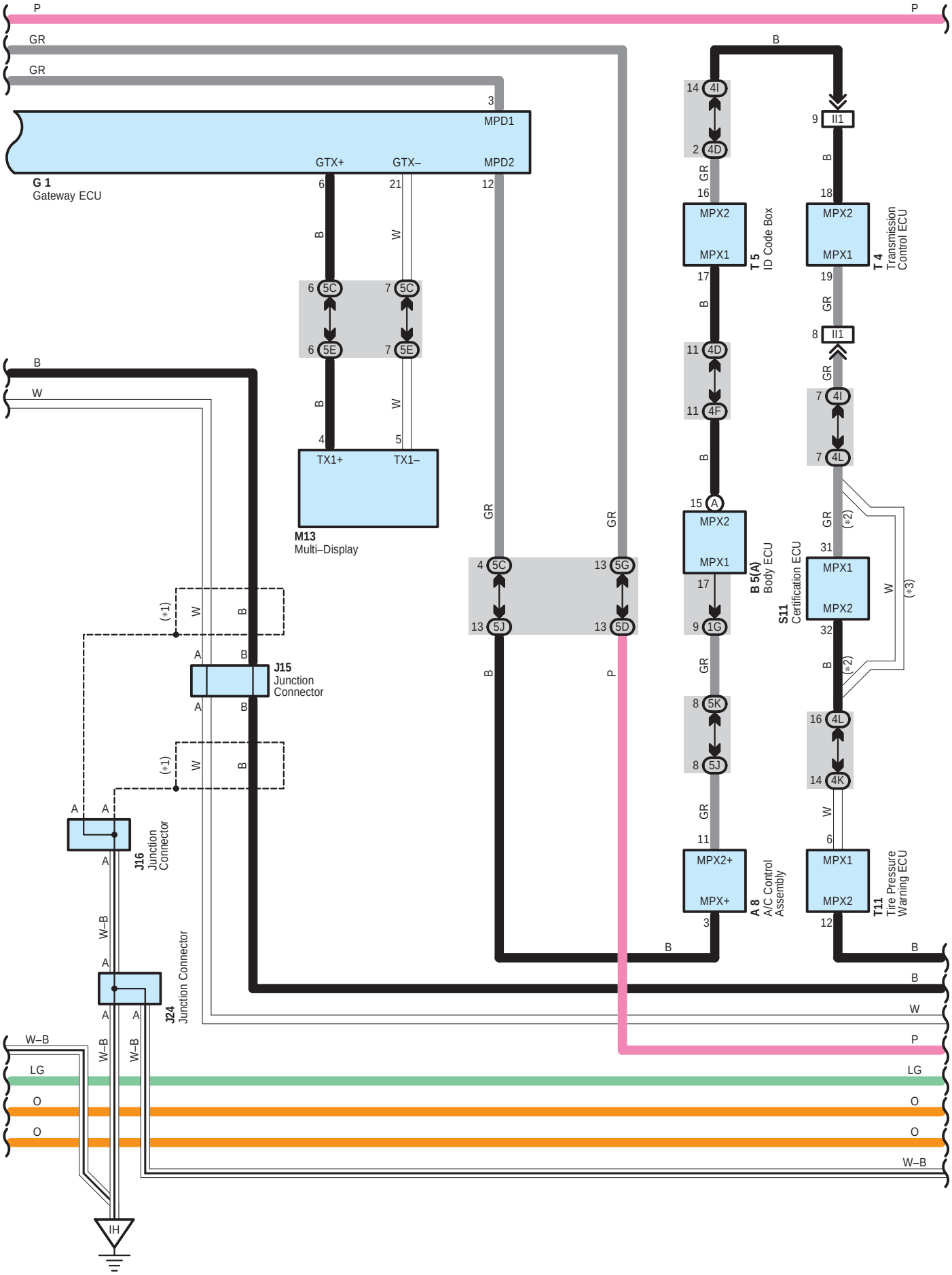
P
GR
GR
3
MPD1
GTX+
GTX–
MPD2
G 1
Gateway ECU
6
21
12
B
W
6 5C
7 5C
6 5E
7 5E
4
5
TX1+
TX1–
M13
Multi–Display
B
W
(*1)
W
B
A
B
J15
Junction
Connector
A
B
(*1)
W
B
A
A
J16
Junction
Connector
A
W–B
A
J24
Junction Connector
A
A
W–B
W–B
W–B
LG
O
O
IH
GR
GR
4 5C
13 5G
13 5J
13 5D
B
P
B
14 4I
2 4D
GR
16
MPX2
MPX1
17
B
11 4D
11 4F
B
15 A
MPX2
MPX1
17
9 1G
GR
8 5K
8 5J
GR
11
MPX2+
MPX+
3
B
T 5
ID Code Box
B 5(A)
Body ECU
A 8
A/C Control
Assembly
B
9 I1
B
18
MPX2
MPX1
19
GR
8 I1
GR
7 4I
7 4L
GR
(*2)
31
MPX1
MPX2
32
B
(*2)
16 4L
14 4K
W
6
MPX1
MPX2
12
B
T 4
Transmission
Control ECU
S11
Certification ECU
W
(*3)
B
B
W
P
LG
O
O
W–B

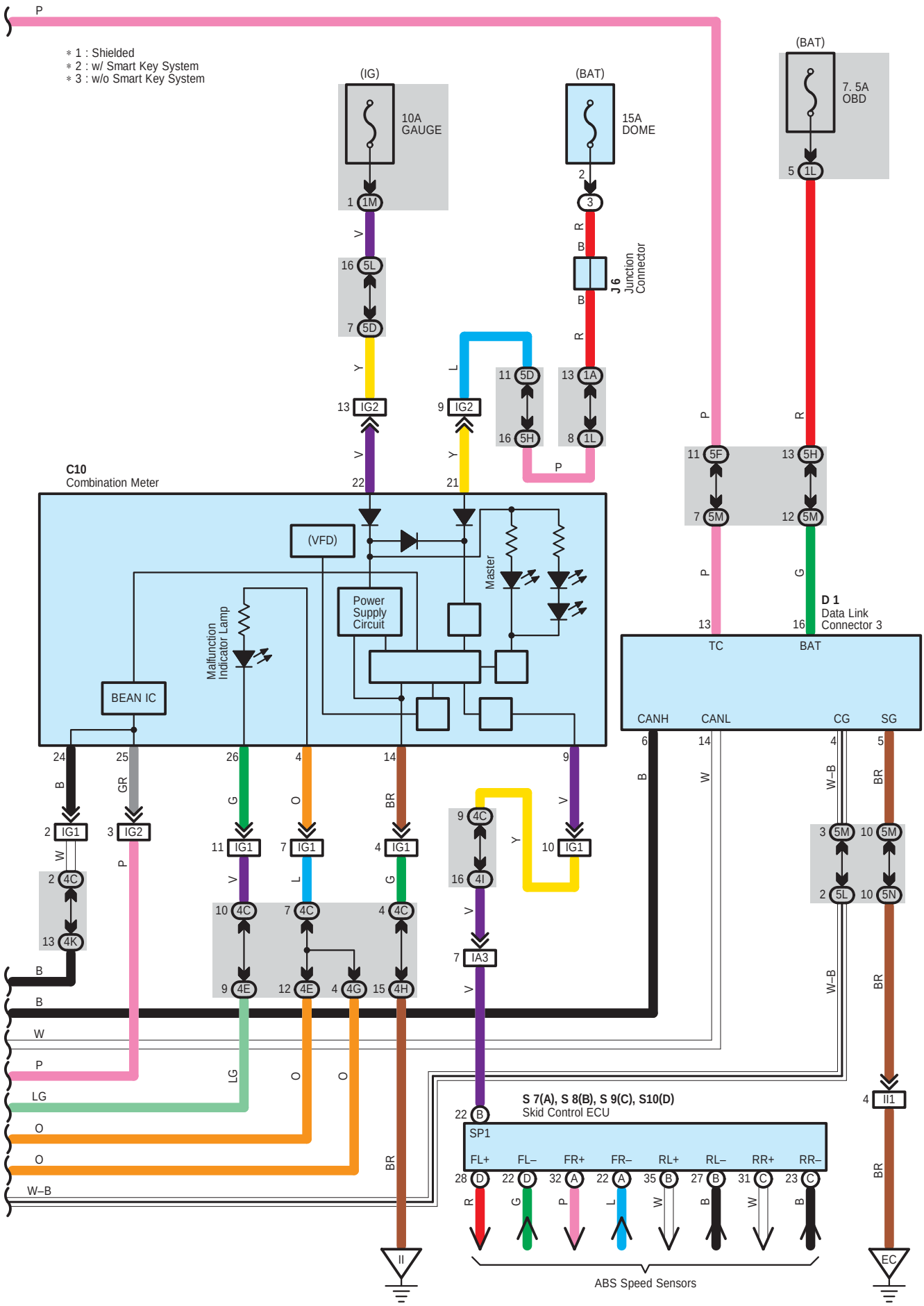
P
* 1 : Shielded
* 2 : w/ Smart Key System
* 3 : w/o Smart Key System
(IG)
10A GAUGE
(BAT)
15A DOME
(BAT)
7. 5A OBD
J 6 Junction Connector
C10 Combination Meter
(VFD)
Power Supply Circuit
Master
Malfunction Indicator Lamp
BEAN IC
D 1 Data Link Connector 3
TC
BAT
CANH
CANL
CG
SG
S 7(A), S 8(B), S 9(C), S10(D) Skid Control ECU
SP1
FL+
FL–
FR+
FR–
RL+
RL–
RR+
RR–
ABS Speed Sensors
EC

System Outline

The engine control system utilizes a microcomputer and maintains overall control of the engine, transmission etc. An outline of the engine control is given here.

1. Input Signals

(1) Engine coolant temp. signal circuit

The engine coolant temp. sensor detects the engine coolant temp. and has a built–in thermistor with a resistance which varies according to the engine coolant temp. The engine coolant temp. is input into TERMINAL THW of the engine control module as a control signal.

(2) Intake air temp. signal circuit

The intake air temp. sensor is installed in the mass air flow meter and detects the intake air temp., which is input to TERMINAL THA of the engine control module as a control signal.

(3) Oxygen sensor signal circuit

The oxygen density in the exhaust emission is detected and is input from the heated oxygen sensors to TERMINAL OX1B of the engine control module as a control signal.

(4) RPM signal circuit

The camshaft position is detected by the camshaft position sensor, and is input into TERMINAL G2 of the engine control module as a control signal. Also, the engine RPM is detected by the crankshaft position sensor and the signal is input into TERMINAL NE+ of the engine control module.

(5) Throttle position sensor signal circuit

The throttle position sensor detects the throttle valve opening angle as a control signal, which is input into TERMINALS VTA and VTA2 of the engine control module.

(6) Vehicle speed signal circuit

ABS speed sensor detects vehicle speed and the speed signal is input from skid control ECU to engine control module.

(7) Battery signal circuit

Voltage is constantly applied to TERMINAL BATT of the engine control module. When the power SW is pushed on, the voltage for engine control module starts up power supply which is applied through the EFI M relay, to TERMINAL +B of the engine control module. The current from the IGN fuse flows to TERMINAL IGSW of the engine control module, and voltage is constantly applied to TERMINAL +BM.

(8) Intake air volume signal circuit

The intake air volume is detected by the mass air flow meter, and is input to TERMINAL VG of the engine control module as a control signal.

(9) Water temp. (CHS) signal circuit

The water temp. (CHS) sensor detects the water temp. (CHS) and has a built–in thermistor with a resistance which varies according to the water temp. (CHS). The water temp. (CHS) is input into TERMINAL THW2 of the engine control module as a control signal.

(10) Engine knock signal circuit

Engine knocking is detected by the knock sensor, and is input into TERMINAL KNK1 of the engine control module as a control signal.

(11) Air fuel ratio signal circuit

The air fuel ratio is detected and input into TERMINAL A1A+ of the engine control module as a control signal.

2. Control System

* SFI system
  The SFI system monitors the engine condition through the signals input from each sensors to the engine control module. The control signal is sent to the engine control module TERMINALS #10, #20, #30 and #40 to operate the injector (Fuel injection). The SFI system controls the fuel injection with the engine control module according to the driving conditions.
* ESA system
  The ESA system monitors the engine condition through the signals input from each sensors to the engine control module. The best ignition timing is decided according to this data and the data stored in the engine control module. The control signal is output to TERMINALS IGT1, IGT2, IGT3 and IGT4, and these signals control the igniter to provide the best ignition timing.
* Heater control system of heated oxygen sensor
  The heater control system of heated oxygen sensor turns the heater on when the intake air volume is low (Temp. of exhaust emission is low), and warms up the heated oxygen sensors to improve their detecting performance. The engine control module evaluates the signals from each sensors, and outputs current to TERMINAL HT1B to control the heater.
* Heater control system of air fuel ratio sensor
  The heater control system of air fuel ratio sensor turns the heater on when the intake air volume is low (Temp. of exhaust emission is low), and warms up the air fuel ratio sensor to improve detecting performance of the sensor.
  The engine control module evaluates the signals from each sensor, current is output to TERMINAL HA1A, controlling the heater.
* Fuel pump control system
  The engine control module supplies current to TERMINAL FC, and controls the operation of the fuel pump with the C/OPN relay.
* VVT–i
  VVT–i controls the intake camshaft to optimal valve timing in accordance with the engine condition.
* CHS system
  Engine control module controls CHS W/P relay to run electric pump to supply heated water stored in CHS tank to engine head. The electric pump stops when the water reaches certain temperature or certain time goes by. Warming engine head optimizes combustion conditions at engine start to reduce emission of incomplete combustion gas.

3. Diagnosis System

When there is malfunction in the engine control module signal system, the malfunctioning system is recorded in the memory. The system can be found by reading the code displayed on the malfunction indicator lamp.

4. Fail–Safe System

When malfunction has occurred in any system, there is possibility of engine trouble due to continuous control based on that system. In such a case, the fail–safe system either controls the system using the data (Standard values) recorded in the engine control module memory, or stops the engine.

○ : Parts Location

Code	See Page	Code	See Page	Code	See Page
A5	46	I1	47	J25	50
A8	48	I2	47	J32	53
A13	48	I3	47	K1	47
B5 A	48	I4	47	M1	47
C1	46	I5	47	M13	50
C2	46	I6	47	O1	47
C7	46	I7	47	P6	51
C10	49	I8	47	S7 A	51
C19	46	J1	47	S8 B	51
C20	46	J2	47	S9 C	51
D1	49	J4	47	S10 D	51
E1	46	J5	50	S11	51
E4 A	49	J6	50	T2	47
E5 B	49	J9	50	T3	47
E6 C	49	J12 A	50	T4	51
E7 D	49	J13 B	50	T5	51
F14	53	J14	50	T11	51
F15	28, 53	J15	50	V1	47
G1	49	J16	50	V6	55
H13	49	J17	50	V7	55
H14 A	49	J18	50	V8	55
H16 C	49	J24	50	W5	47

▭ : Relay Blocks

Code	See Page	Relay Blocks (Relay Block Location)
2	28	Engine Room R/B No.2 (Right Side of Reserve Tank)
3	22	Engine Room R/B (Engine Compartment Left)

: **Junction Block and Wire Harness Connector**

Code	See Page	Junction Block and Wire Harness (Connector Location)
1A	30	Engine Room Main Wire and Driver Side J/B (Lower Finish Panel)
1E	30	Instrument Panel Wire and Driver Side J/B (Lower Finish Panel)
1F		
1G		
1L	31	
1M		
3A	23	Engine Room Main Wire and Engine Room J/B (Engine Compartment Left)
3B		
3G	24	
3I		
3K		
3M	23	Frame Wire and Engine Room J/B (Engine Compartment Left)
4C	38	Instrument Panel Wire and Center Connector No.1 (Behind the Combination Meter)
4D		
4E		
4F		
4G		
4H		
4I		
4J		
4K		
4L		
5C	42	Instrument Panel Wire and Center Connector No.2 (Instrument Panel Brace RH)
5D		
5E		
5F		
5G		
5H		
5J		
5K		
5L		
5M		
5N		

: Connector Joining Wire Harness and Wire Harness

Code	See Page	Joining Wire Harness and Wire Harness (Connector Location)
EA1	56	Engine Wire and Engine No.4 Wire (Near the Radiator Fan)
EB1	56	Engine Wire and Engine Room Main Wire (Inside of the Engine Room R/B)
IA1	58	Engine Room Main Wire and Instrument Panel Wire (Upper Parts of Front Body Pillar LH)
IA3		
IF1	58	Floor Wire and Engine Room Main Wire (Left Kick Panel)
IG1	59	Instrument Panel Wire and Instrument Panel No.2 Wire (Behind the Combination Meter)
IG2		
II1	59	Engine Wire and Instrument Panel Wire (Behind the Glove Box)
IJ1	59	Engine Room Main Wire and Instrument Panel Wire (Behind the Glove Box)
IK1	59	Engine Room Main Wire and Floor No.2 Wire (Cowl Side Panel RH)
IM1	59	Instrument Panel Wire and Floor No.2 Wire (Right Kick Panel)
IM2		
IN1	59	Floor No.2 Wire and Engine Room Main Wire (Right Kick Panel)
BE1	60	Frame Wire and Floor No.2 Wire (Front Side of Left Quarter Panel)
BF1	60	Floor No.2 Wire and Fuel Tank Wire (Near the Fuel Tank)
BF2		
BM1	61	Floor No.2 Wire and Floor Wire (Rear Side of Right Quarter Panel)

: Ground Points

Code	See Page	Ground Points Location
EC	56	Engine Block
ED		
EE	56	Left Side of the Suspension Tower
EF		
IH	58	Cowl Side Panel LH
II	58	Instrument Panel Brace LH
IK	58	Cowl Side Panel RH
BQ	60	Rear Side of Right Quarter Panel

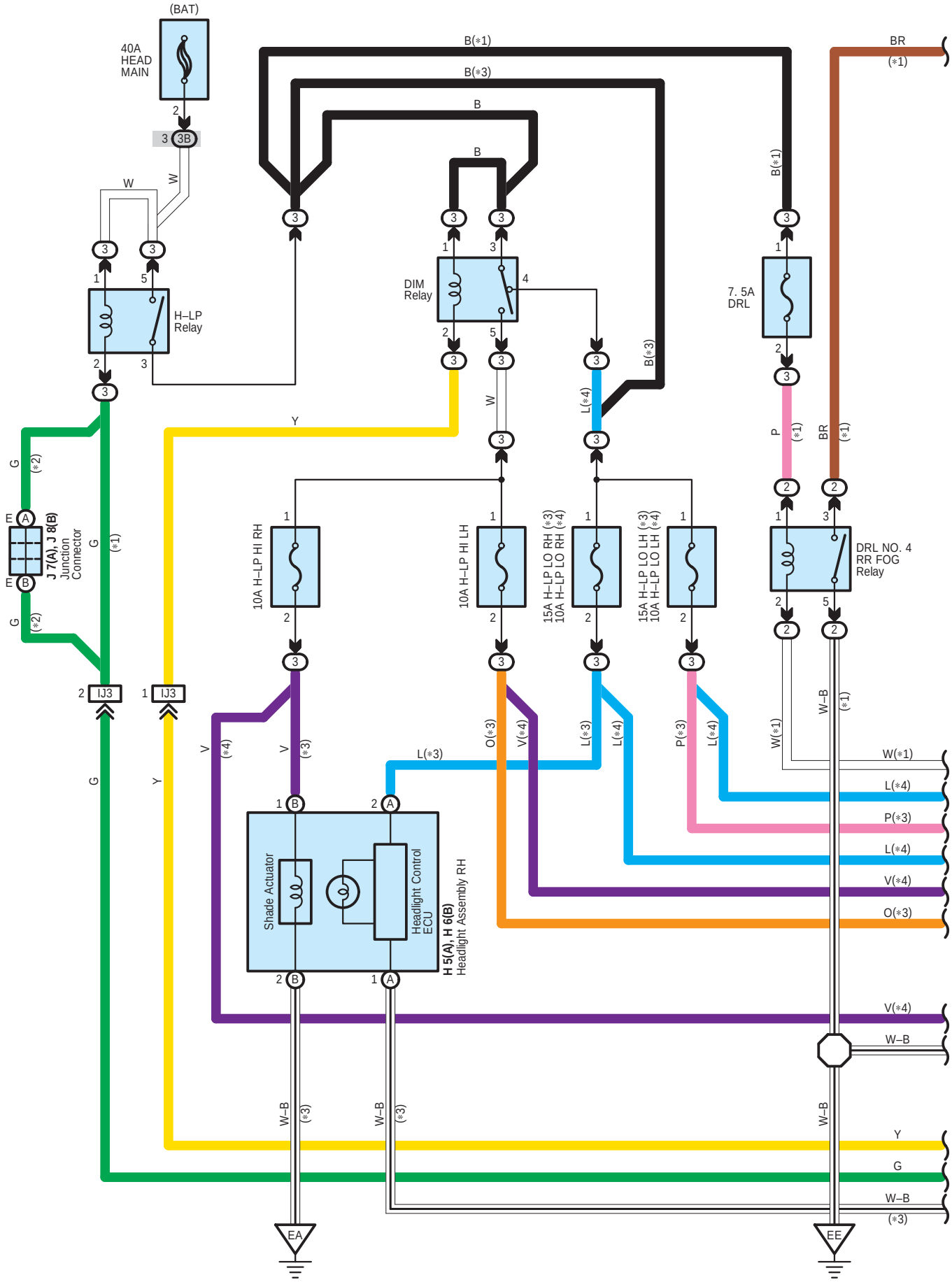
(BAT)
40A HEAD MAIN
3B
H–LP Relay
DIM Relay
7. 5A DRL
DRL NO. 4 RR FOG Relay
J 7(A), J 8(B) Junction Connector
10A H–LP HI RH
10A H–LP HI LH
15A H–LP LO RH (*3) 10A H–LP LO RH (*4)
15A H–LP LO LH (*3) 10A H–LP LO LH (*4)
IJ3
Shade Actuator
Headlight Control ECU
H 5(A), H 6(B) Headlight Assembly RH
EA
EE
B(*1)
B(*3)
B
BR (*1)
W
Y
G
V
L(*3)
O(*3)
V(*4)
L(*4)
P(*3)
P (*1)
W(*1)
W–B
(*1)
(*2)
(*3)
(*4)

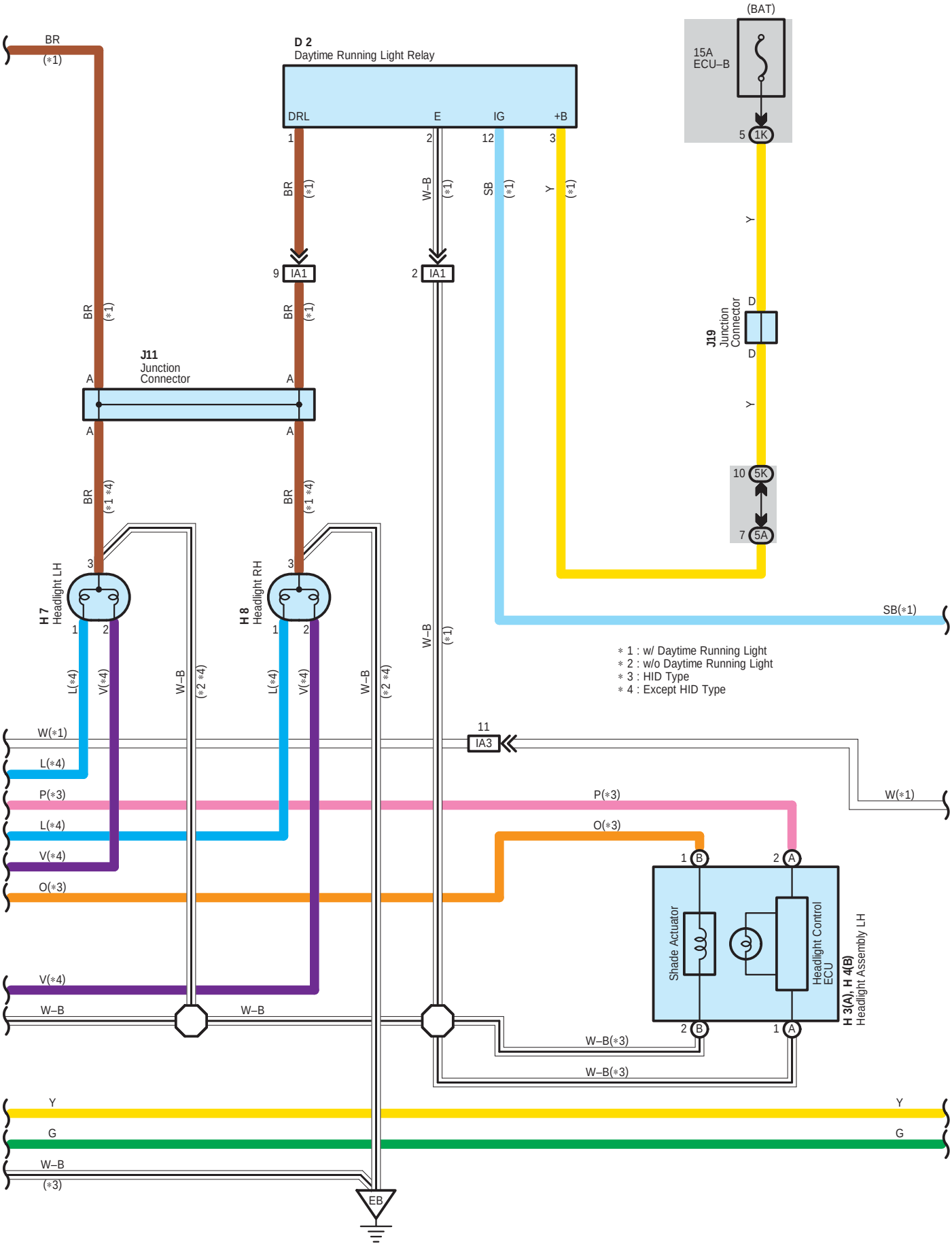
BR
(*1)
D 2
Daytime Running Light Relay
DRL
E
IG
+B
1
2
12
3
BR
(*1)
W–B
(*1)
SB
(*1)
Y
(*1)
(BAT)
15A
ECU–B
5
1K
9
IA1
2
IA1
Y
D
J19
Junction
Connector
D
Y
J11
Junction
Connector
A
A
A
A
BR
(*1)
BR
(*1)
BR
(*1 *4)
BR
(*1 *4)
10
5K
7
5A
3
3
H 7
Headlight LH
H 8
Headlight RH
1
2
1
2
SB(*1)
W–B
(*1)
L(*4)
V(*4)
W–B
(*2 *4)
L(*4)
V(*4)
W–B
(*2 *4)
* 1 : w/ Daytime Running Light
* 2 : w/o Daytime Running Light
* 3 : HID Type
* 4 : Except HID Type
11
IA3
W(*1)
L(*4)
P(*3)
L(*4)
V(*4)
O(*3)
P(*3)
W(*1)
O(*3)
1
B
2
A
Shade Actuator
Headlight Control
ECU
H 3(A), H 4(B)
Headlight Assembly LH
2
B
1
A
V(*4)
W–B
W–B
W–B(*3)
W–B(*3)
Y
G
W–B
(*3)
Y
G
EB

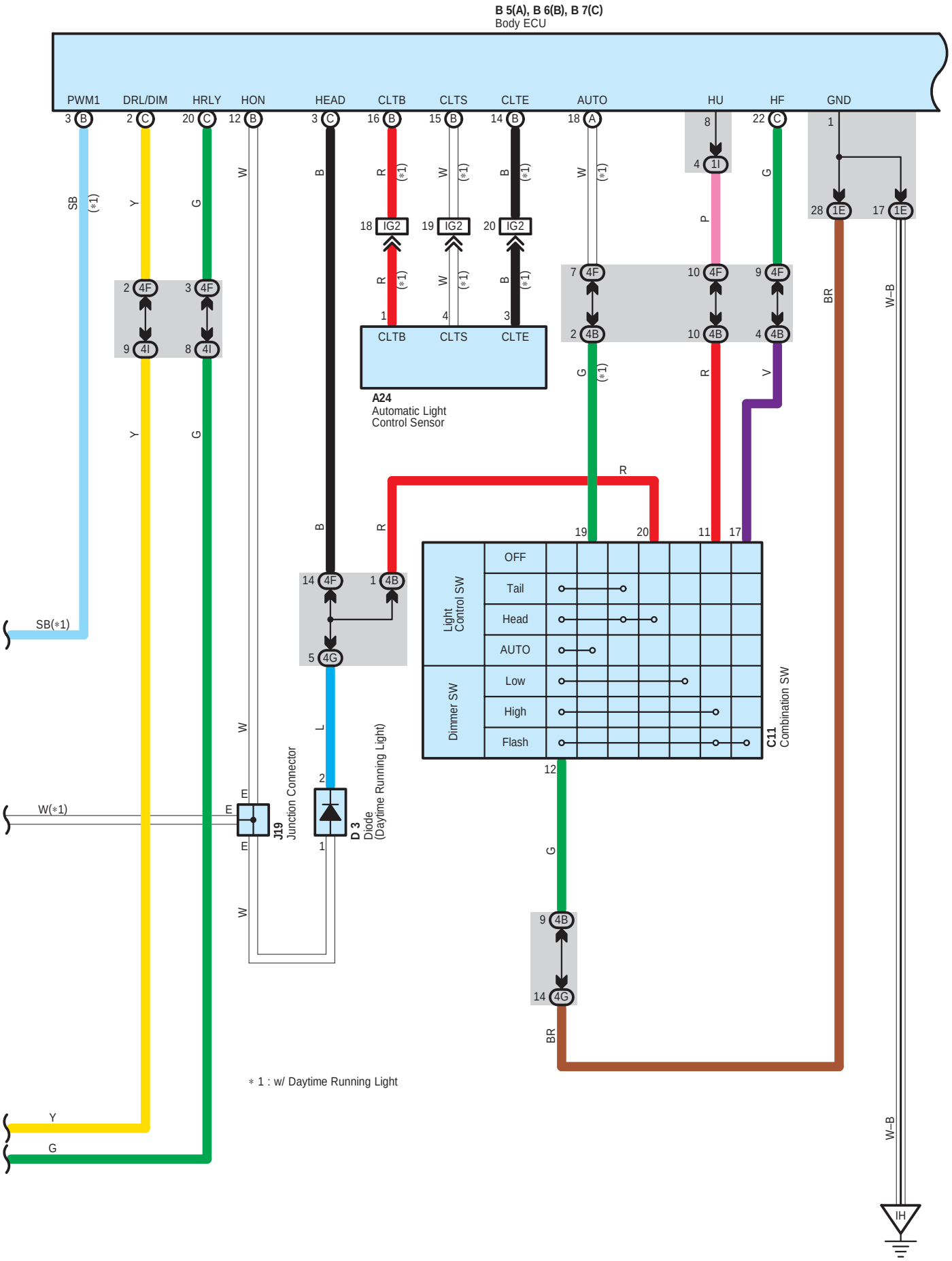
B 5(A), B 6(B), B 7(C)
Body ECU
PWM1
DRL/DIM
HRLY
HON
HEAD
CLTB
CLTS
CLTE
AUTO
HU
HF
GND
A24
Automatic Light Control Sensor
Light Control SW
Dimmer SW
OFF
Tail
Head
AUTO
Low
High
Flash
C11
Combination SW
J19
Junction Connector
D 3
Diode (Daytime Running Light)
SB(*1)
W(*1)
Y
G
W–B
BR
IH
* 1 : w/ Daytime Running Light

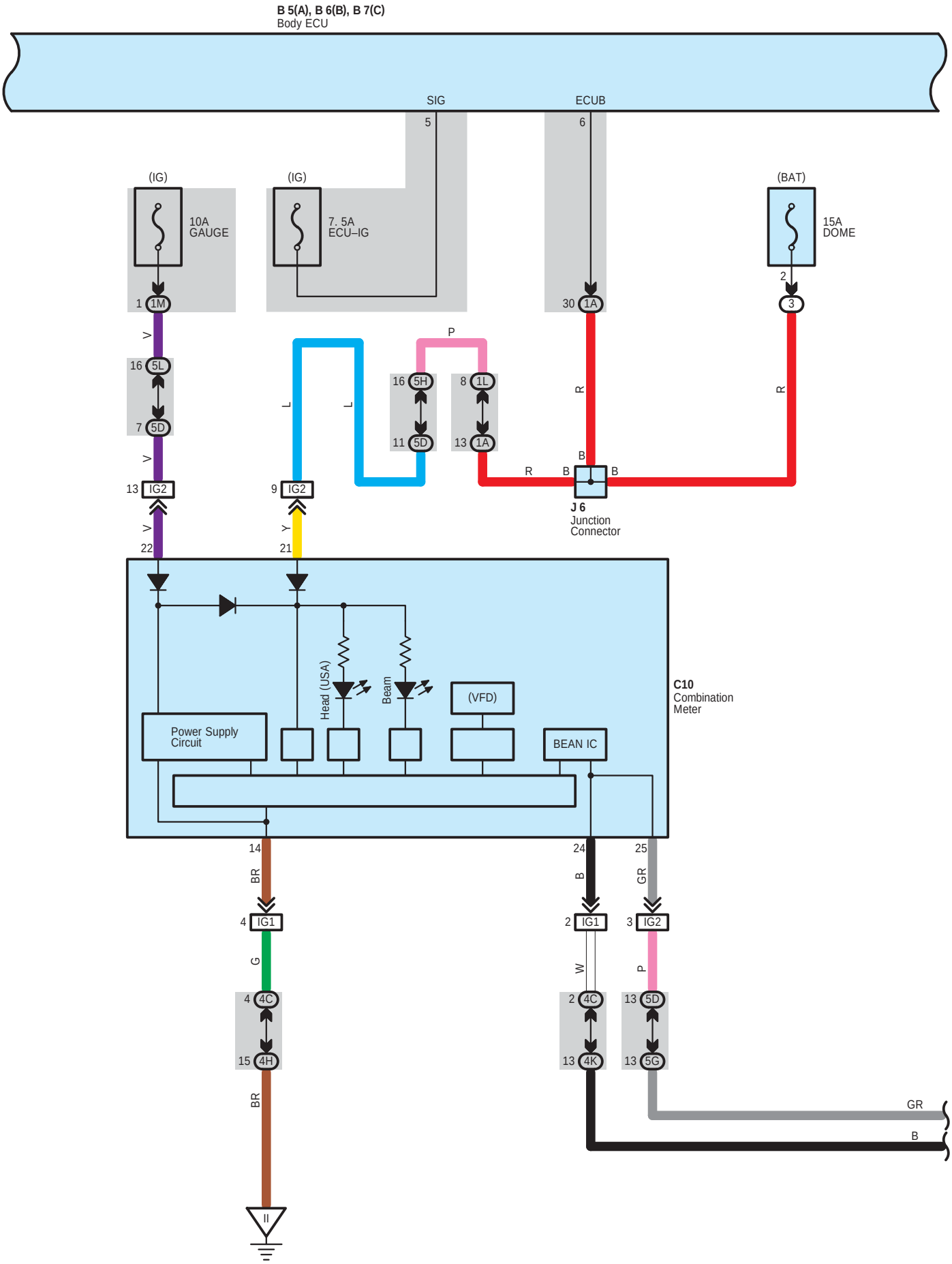
B 5(A), B 6(B), B 7(C)
Body ECU
SIG
ECUB
5
6
(IG)
(IG)
(BAT)
10A
GAUGE
7. 5A
ECU–IG
15A
DOME
1 1M
30 1A
2
3
V
P
16 5L
7 5D
16 5H
11 5D
8 1L
13 1A
L
L
R
R
B
R
B
B
13 IG2
9 IG2
J 6
Junction
Connector
V
Y
22
21
Head (USA)
Beam
(VFD)
Power Supply
Circuit
BEAN IC
C10
Combination
Meter
14
24
25
BR
B
GR
4 IG1
2 IG1
3 IG2
G
W
P
4 4C
15 4H
2 4C
13 4K
13 5D
13 5G
BR
GR
B
II

∗ 5 : w/ Smart Key System
∗ 6 : w/o Smart Key System

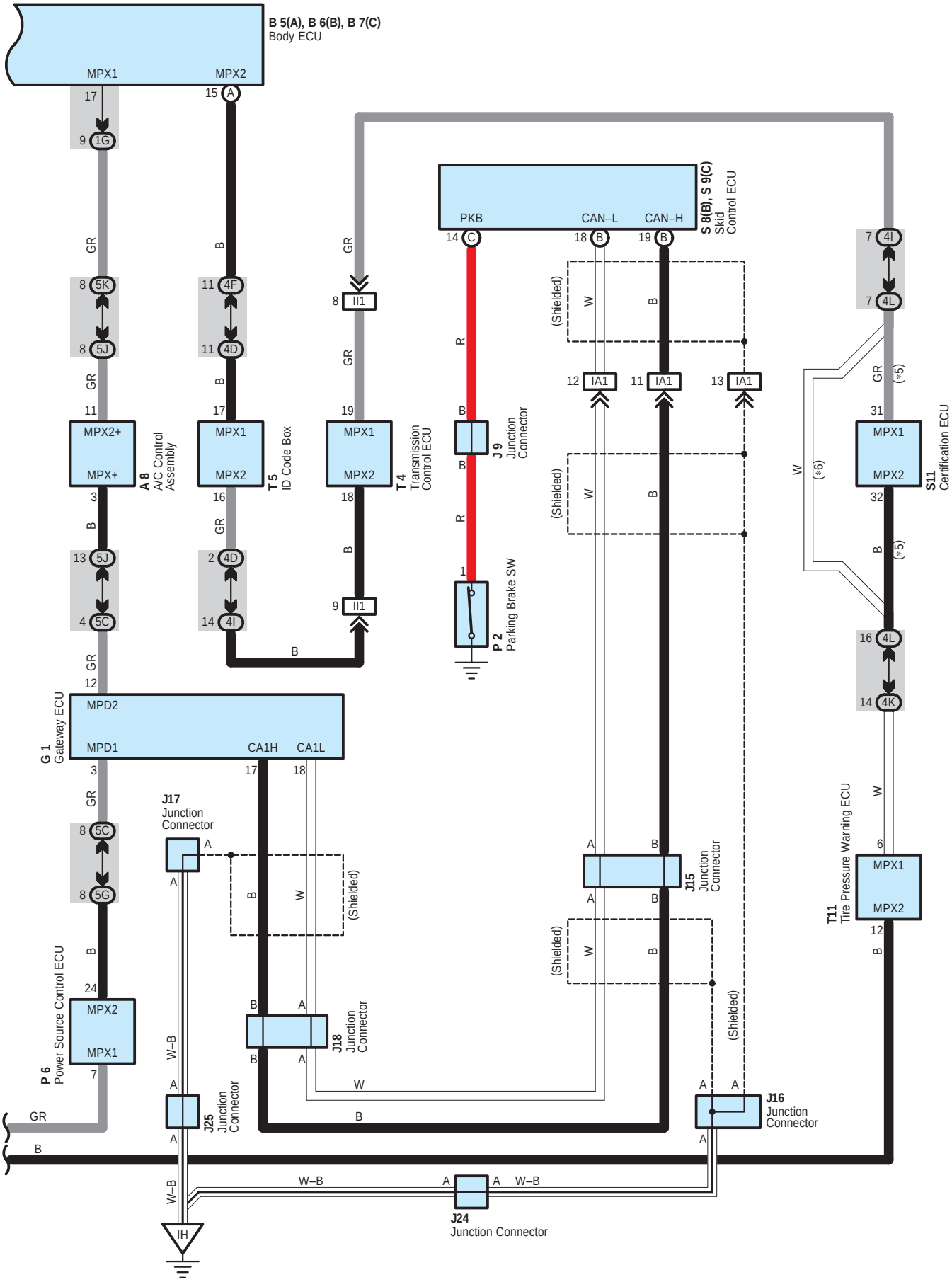

System Outline

Daytime Running Light Function (Canada)

When power SW is at IG ON position and the vehicle is ready to drive (READY lamp on the display in combination meter is on), releasing parking brake makes signal go into TERMINAL PKB of body ECU. In this condition, when light control SW is at Off/Tail/AUTO position (Headlight is not lit), body ECU sends daytime operation request from TERMINAL DRL/DIM to daytime running light relay. As a result, daytime running light relay duty–operates headlights (Dimmer than regular lighting)

: Parts Location

Code	See Page	Code	See Page	Code	See Page
A8	48	H5 A	46	J18	50
A24	48	H6 B	46	J19	50
B5 A	48	H7	46	J24	50
B6 B	48	H8	46	J25	50
B7 C	48	J6	50	P2	51
C10	49	J7 A	50	P6	51
C11	49	J8 B	50	S8 B	51
D2	49	J9	50	S9 C	51
D3	49	J11	50	S11	51
G1	49	J15	50	T4	51
H3 A	46	J16	50	T5	51
H4 B	46	J17	50	T11	51

: Relay Blocks

Code	See Page	Relay Blocks (Relay Block Location)
2	28	Engine Room R/B No.2 (Right Side of Reserve Tank)
3	22	Engine Room R/B (Engine Compartment Left)

: Junction Block and Wire Harness Connector

Code	See Page	Junction Block and Wire Harness (Connector Location)
1A	30	Engine Room Main Wire and Driver Side J/B (Lower Finish Panel)
1E	30	Instrument Panel Wire and Driver Side J/B (Lower Finish Panel)
1G		
1I		
1K	31	
1L		
1M		
3B	23	Engine Room Main Wire and Engine Room J/B (Engine Compartment Left)
4B	38	Instrument Panel Wire and Center Connector No.1 (Behind the Combination Meter)
4C		
4D		
4F		
4G		
4H		
4I		
4K		
4L		
5A	42	Instrument Panel Wire and Center Connector No.2 (Instrument Panel Brace RH)
5C		
5D		
5G		
5H		
5J		
5K		
5L		

Headlight

: Connector Joining Wire Harness and Wire Harness

Code	See Page	Joining Wire Harness and Wire Harness (Connector Location)
IA1	58	Engine Room Main Wire and Instrument Panel Wire (Upper Parts of Front Body Pillar LH)
IA3		
IG1	59	Instrument Panel Wire and Instrument Panel No.2 Wire (Behind the Combination Meter)
IG2		
II1	59	Engine Wire and Instrument Panel Wire (Behind the Glove Box)
IJ3	59	Engine Room Main Wire and Instrument Panel Wire (Behind the Glove Box)

: Ground Points

Code	See Page	Ground Points Location
EA	56	Right Side of the Fender Apron
EB		
EE	56	Left Side of the Suspension Tower
IH	58	Cowl Side Panel LH
II	58	Instrument Panel Brace LH

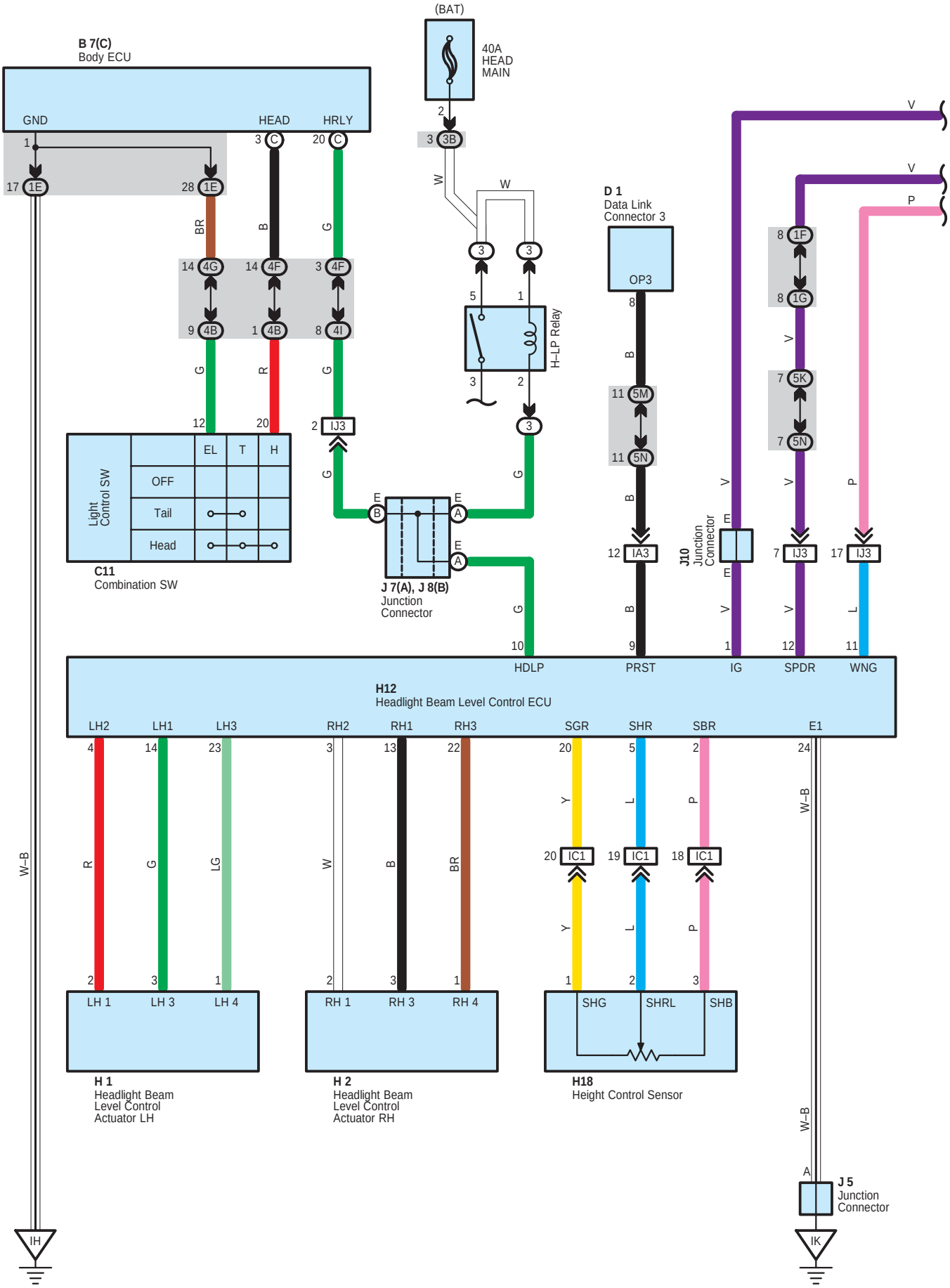
B 7(C)
Body ECU
GND
HEAD
HRLY
(BAT)
40A
HEAD
MAIN
D 1
Data Link
Connector 3
OP3
H-LP Relay
Light
Control SW
OFF
Tail
Head
EL
T
H
C11
Combination SW
J 7(A), J 8(B)
Junction
Connector
J10
Junction
Connector
HDLP
PRST
IG
SPDR
WNG
H12
Headlight Beam Level Control ECU
LH2
LH1
LH3
RH2
RH1
RH3
SGR
SHR
SBR
E1
LH 1
LH 3
LH 4
RH 1
RH 3
RH 4
SHG
SHRL
SHB
H 1
Headlight Beam
Level Control
Actuator LH
H 2
Headlight Beam
Level Control
Actuator RH
H18
Height Control Sensor
J 5
Junction
Connector
W-B
IH
IK

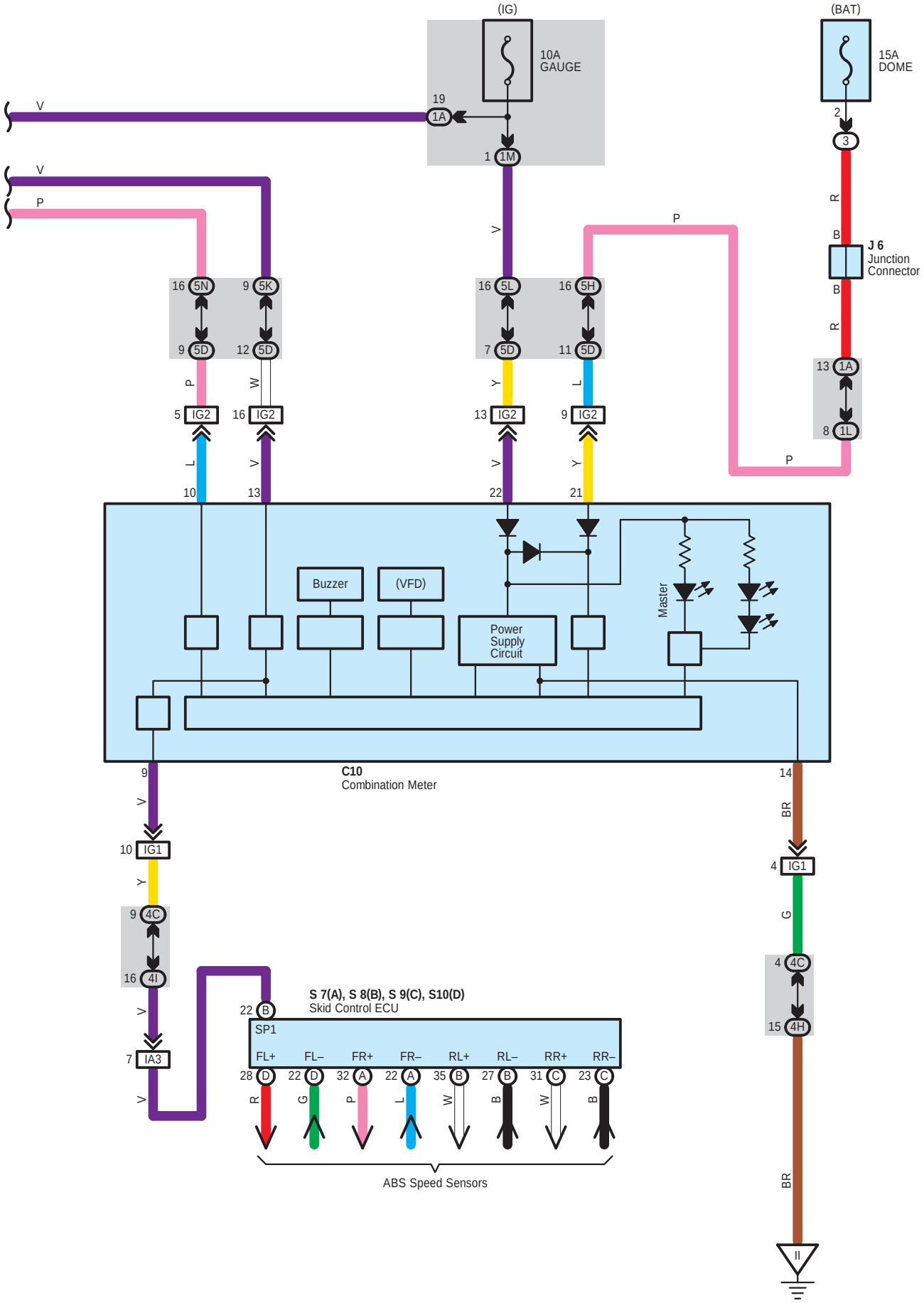
(IG)
10A
GAUGE
19
1A
1
1M
V
V
P
16
5N
9
5K
9
5D
12
5D
P
W
5
IG2
16
IG2
L
V
10
13
16
5L
16
5H
7
5D
11
5D
Y
L
13
IG2
9
IG2
V
Y
22
21
P
(BAT)
15A
DOME
2
3
R
B
J 6
Junction
Connector
B
R
13
1A
8
1L
P
Buzzer
(VFD)
Power
Supply
Circuit
Master
C10
Combination Meter
9
V
10
IG1
Y
9
4C
16
4I
V
7
IA3
V
S 7(A), S 8(B), S 9(C), S10(D)
Skid Control ECU
22
B
SP1
FL+
FL–
FR+
FR–
RL+
RL–
RR+
RR–
28
D
22
D
32
A
22
A
35
B
27
B
31
C
23
C
R
G
P
L
W
B
W
B
ABS Speed Sensors
14
BR
4
IG1
G
4
4C
15
4H
BR

Headlight Beam Level Control

System Outline

This system adjusts the illuminating angle from changes in the vehicle height and axle distance, based on the information of the vehicle height detected by the height sensors installed at the rear of the vehicle and on information of the vehicle speed and acceleration output from the VSC system which operates the reflector with the obtained illuminating angle through actuators in order to always keep the beam axis constant.
If an error occurs in this system, the headlight beam level control warning light in the combination meter lights up and warning buzzer goes on to warn the driver.

: Parts Location

Code	See Page	Code	See Page	Code	See Page
B7 C	48	H12	49	J10	50
C10	49	H18	53	S7 A	51
C11	49	J5	50	S8 B	51
D1	49	J6	50	S9 C	51
H1	46	J7 A	50	S10 D	51
H2	46	J8 B	50		

: Relay Blocks

Code	See Page	Relay Blocks (Relay Block Location)
3	22	Engine Room R/B (Engine Compartment Left)

: Junction Block and Wire Harness Connector

Code	See Page	Junction Block and Wire Harness (Connector Location)
1A	30	Engine Room Main Wire and Driver Side J/B (Lower Finish Panel)
1E	30	Instrument Panel Wire and Driver Side J/B (Lower Finish Panel)
1F		
1G		
1L	31	
1M		
3B	23	Engine Room Main Wire and Engine Room J/B (Engine Compartment Left)
4B	38	Instrument Panel Wire and Center Connector No.1 (Behind the Combination Meter)
4C		
4F		
4G		
4H		
4I		
5D	42	Instrument Panel Wire and Center Connector No.2 (Instrument Panel Brace RH)
5H		
5K		
5L		
5M		
5N		

: Connector Joining Wire Harness and Wire Harness

Code	See Page	Joining Wire Harness and Wire Harness (Connector Location)
IA3	58	Engine Room Main Wire and Instrument Panel Wire (Upper Parts of Front Body Pillar LH)
IC1	58	Engine Room Main Wire and Floor Wire (Cowl Side Panel LH)
IG1	59	Instrument Panel Wire and Instrument Panel No.2 Wire (Behind the Combination Meter)
IG2		
IJ3	59	Engine Room Main Wire and Instrument Panel Wire (Behind the Glove Box)

▽ : **Ground Points**

Code	See Page	Ground Points Location
IH	58	Cowl Side Panel LH
II	58	Instrument Panel Brace LH
IK	58	Cowl Side Panel RH

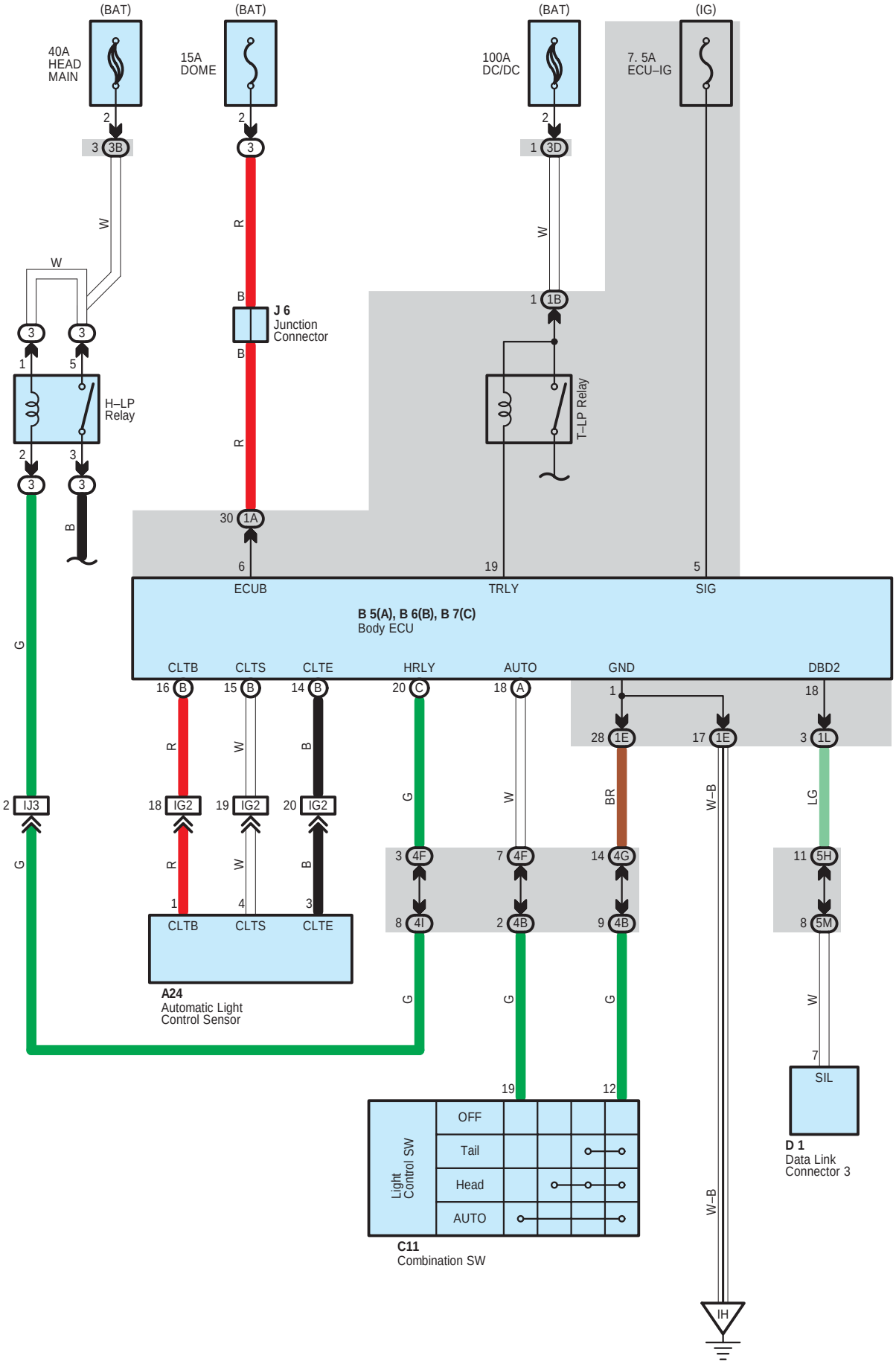
(BAT)
40A
HEAD
MAIN
(BAT)
15A
DOME
(BAT)
100A
DC/DC
(IG)
7. 5A
ECU–IG
J 6
Junction
Connector
H–LP
Relay
T–LP Relay
ECUB
TRLY
SIG
B 5(A), B 6(B), B 7(C)
Body ECU
CLTB
CLTS
CLTE
HRLY
AUTO
GND
DBD2
A24
Automatic Light
Control Sensor
C11
Combination SW
Light
Control SW
OFF
Tail
Head
AUTO
D 1
Data Link
Connector 3
SIL
IH
W–B

System Outline

The automatic light control system works when the light control SW is turned to AUTO. The automatic light control sensor detects the brightness around the vehicle. By this function, the system automatically turns on the taillight and headlight if the brightness is below the certain level and turns off the taillight and headlight when the surroundings become brighter than the certain level.

: Parts Location

Code	See Page	Code	See Page	Code	See Page
A24	48	B7 C	48	J6	50
B5 A	48	C11	49		
B6 B	48	D1	49		

: Relay Blocks

Code	See Page	Relay Blocks (Relay Block Location)
3	22	Engine Room R/B (Engine Compartment Left)

: Junction Block and Wire Harness Connector

Code	See Page	Junction Block and Wire Harness (Connector Location)
1A	30	Engine Room Main Wire and Driver Side J/B (Lower Finish Panel)
1B		
1E	30	Instrument Panel Wire and Driver Side J/B (Lower Finish Panel)
1L	31	
3B	23	Engine Room Main Wire and Engine Room J/B (Engine Compartment Left)
3D		
4B	38	Instrument Panel Wire and Center Connector No.1 (Behind the Combination Meter)
4F		
4G		
4I		
5H	42	Instrument Panel Wire and Center Connector No.2 (Instrument Panel Brace RH)
5M		

: Connector Joining Wire Harness and Wire Harness

Code	See Page	Joining Wire Harness and Wire Harness (Connector Location)
IG2	59	Instrument Panel Wire and Instrument Panel No.2 Wire (Behind the Combination Meter)
IJ3	59	Engine Room Main Wire and Instrument Panel Wire (Behind the Glove Box)

: Ground Points

Code	See Page	Ground Points Location
IH	58	Cowl Side Panel LH

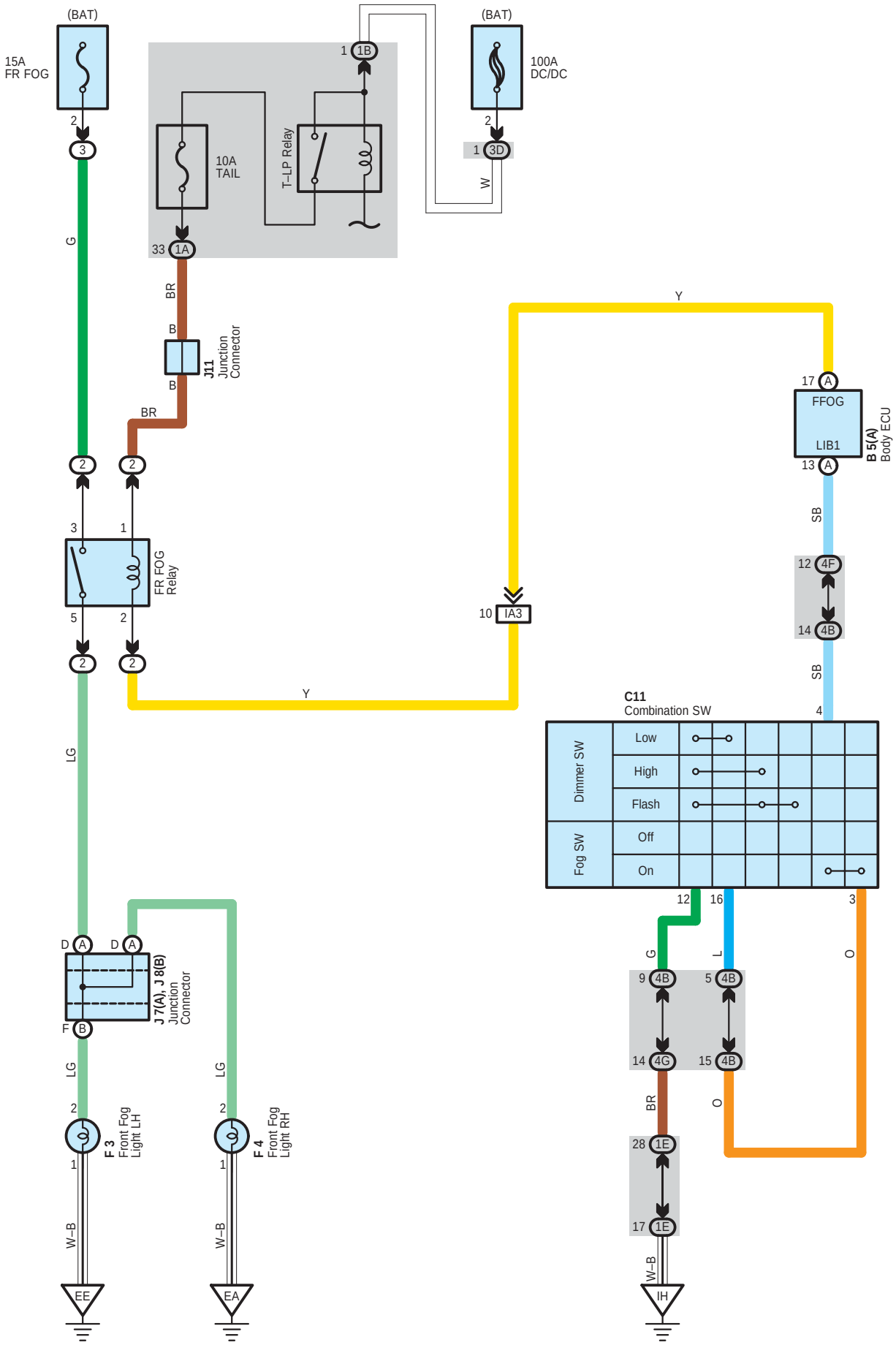
(BAT)
15A
FR FOG
2
3
G
1
1B
10A
TAIL
T–LP Relay
33
1A
BR
B
J11
Junction
Connector
B
BR
2
2
3
1
FR FOG
Relay
5
2
2
2
(BAT)
100A
DC/DC
2
1
3D
W
Y
10
IA3
Y
17
A
FFOG
LIB1
13
A
B 5(A)
Body ECU
SB
12
4F
14
4B
SB
4
C11
Combination SW
Dimmer SW
Low
High
Flash
Fog SW
Off
On
12
16
3
G
L
O
9
4B
5
4B
14
4G
15
4B
BR
O
28
1E
17
1E
W–B
IH
LG
D
A
D
A
J 7(A), J 8(B)
Junction
Connector
F
B
LG
LG
2
F 3
Front Fog
Light LH
1
W–B
EE
2
F 4
Front Fog
Light RH
1
W–B
EA

: Parts Location

Code		See Page	Code		See Page	Code	See Page
B5	A	48	F4		46	J11	50
C11		49	J7	A	50		
F3		46	J8	B	50		

: Relay Blocks

Code	See Page	Relay Blocks (Relay Block Location)
2	28	Engine Room R/B No.2 (Right Side of Reserve Tank)
3	22	Engine Room R/B (Engine Compartment Left)

: Junction Block and Wire Harness Connector

Code	See Page	Junction Block and Wire Harness (Connector Location)
1A	30	Engine Room Main Wire and Driver Side J/B (Lower Finish Panel)
1B		
1E	30	Instrument Panel Wire and Driver Side J/B (Lower Finish Panel)
3D	23	Engine Room Main Wire and Engine Room J/B (Engine Compartment Left)
4B	38	Instrument Panel Wire and Center Connector No.1 (Behind the Combination Meter)
4F		
4G		

: Connector Joining Wire Harness and Wire Harness

Code	See Page	Joining Wire Harness and Wire Harness (Connector Location)
IA3	58	Engine Room Main Wire and Instrument Panel Wire (Upper Parts of Front Body Pillar LH)

: Ground Points

Code	See Page	Ground Points Location
EA	56	Right Side of the Fender Apron
EE	56	Left Side of the Suspension Tower
IH	58	Cowl Side Panel LH

Light Auto Turn Off System

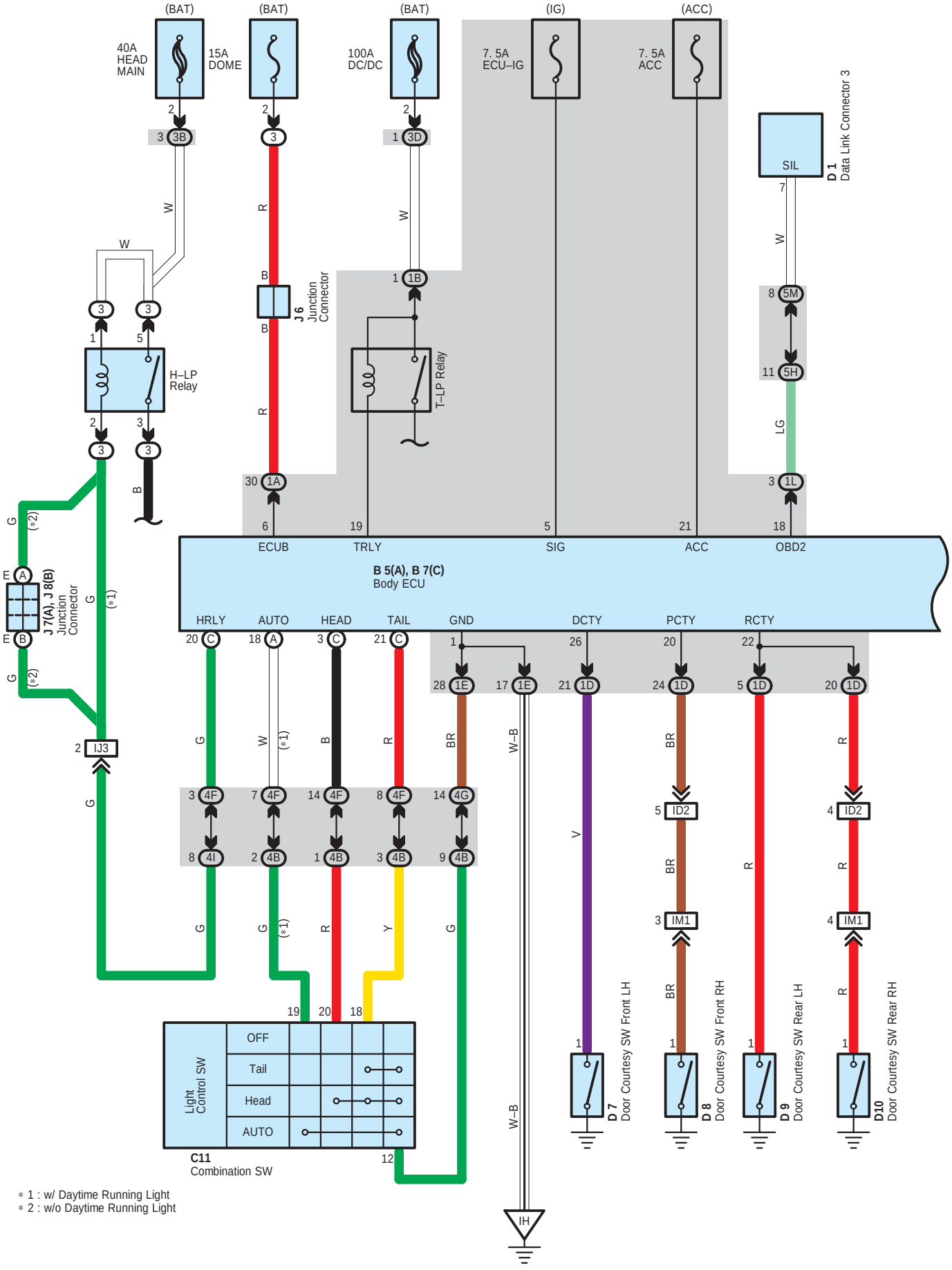

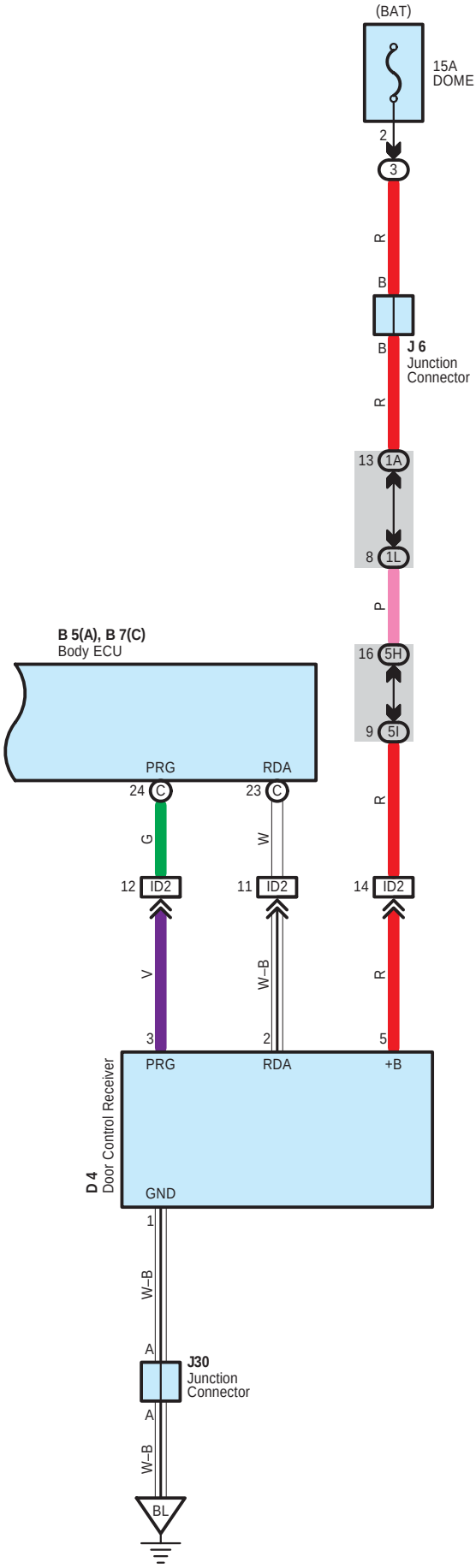
(BAT)
15A
DOME
2
3
R
B
B
J 6
Junction
Connector
R
13 1A
8 1L
P
16 5H
9 5I
R
14 ID2
B 5(A), B 7(C)
Body ECU
PRG
RDA
24 C
23 C
G
W
12 ID2
11 ID2
V
W–B
3
2
5
PRG
RDA
+B
D 4
Door Control Receiver
GND
1
W–B
A
J30
Junction
Connector
A
W–B
BL

Light Auto Turn Off System

System Outline

* When the other lamps than headlights are lit under 'TAIL' or 'AUTO' condition of the light control SW, the taillights and front fog lights are turned OFF if the power SW is changed from 'IG ON' to 'IG OFF', and the driver side door is opened from closed condition.
* When the headlamps are lit under 'HEAD' or 'AUTO' condition of the light control SW, if the power SW is changed from 'IG ON' to 'IG OFF', and all the doors are closed from open condition or under all the door locked condition, operating the wireless door lock function turns OFF the headlights, taillights and front fog lights.

: Parts Location

Code	See Page	Code	See Page	Code	See Page
B5 A	48	D7	52	J7 A	50
B7 C	48	D8	52	J8 B	50
C11	49	D9	52	J30	53
D1	49	D10	52		
D4	52	J6	50		

: Relay Blocks

Code	See Page	Relay Blocks (Relay Block Location)
3	22	Engine Room R/B (Engine Compartment Left)

: Junction Block and Wire Harness Connector

Code	See Page	Junction Block and Wire Harness (Connector Location)
1A	30	Engine Room Main Wire and Driver Side J/B (Lower Finish Panel)
1B		
1D	30	Floor Wire and Driver Side J/B (Lower Finish Panel)
1E	30	Instrument Panel Wire and Driver Side J/B (Lower Finish Panel)
1L	31	
3B	23	Engine Room Main Wire and Engine Room J/B (Engine Compartment Left)
3D		
4B	38	Instrument Panel Wire and Center Connector No.1 (Behind the Combination Meter)
4F		
4G		
4I		
5H	42	Instrument Panel Wire and Center Connector No.2 (Instrument Panel Brace RH)
5I		
5M		

: Connector Joining Wire Harness and Wire Harness

Code	See Page	Joining Wire Harness and Wire Harness (Connector Location)
ID2	58	Instrument Panel Wire and Floor Wire (Left Kick Panel)
IJ3	59	Engine Room Main Wire and Instrument Panel Wire (Behind the Glove Box)
IM1	59	Instrument Panel Wire and Floor No.2 Wire (Right Kick Panel)

: Ground Points

Code	See Page	Ground Points Location
IH	58	Cowl Side Panel LH
BL	60	Rear Side of Left Quarter Panel

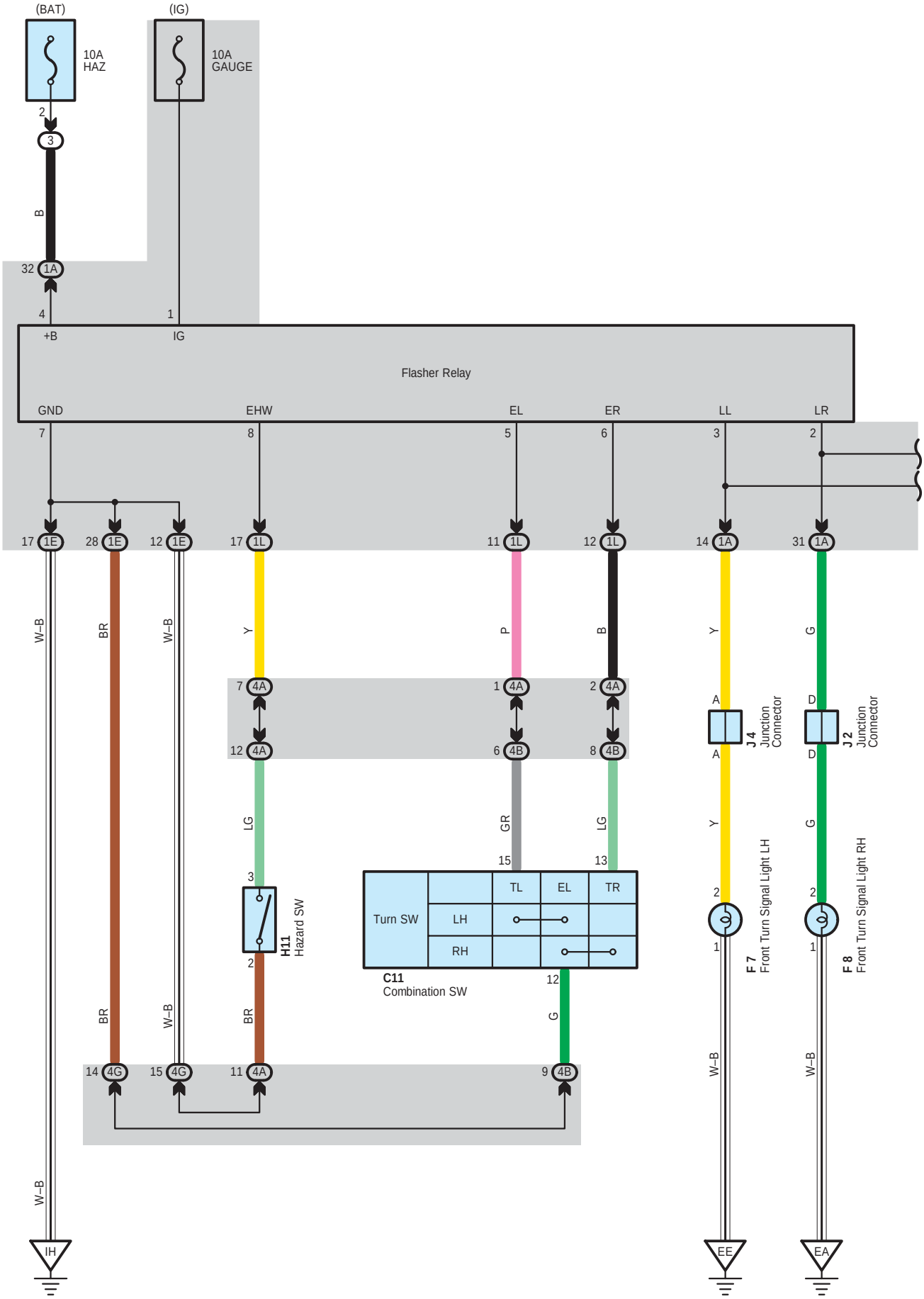
(BAT)
(IG)
10A
HAZ
10A
GAUGE
2
3
B
32 1A
4
+B
1
IG
Flasher Relay
GND
EHW
EL
ER
LL
LR
7
8
5
6
3
2
17 1E
28 1E
12 1E
17 1L
11 1L
12 1L
14 1A
31 1A
W–B
BR
W–B
Y
P
B
Y
G
7 4A
12 4A
1 4A
6 4B
2 4A
8 4B
A
A
J4
Junction
Connector
D
D
J2
Junction
Connector
LG
GR
LG
Y
G
3
15
13
2
1
H11
Hazard SW
Turn SW
TL
EL
TR
LH
RH
C11
Combination SW
12
F7
Front Turn Signal Light LH
F8
Front Turn Signal Light RH
BR
W–B
BR
G
14 4G
15 4G
11 4A
9 4B
W–B
W–B
W–B
IH
EE
EA

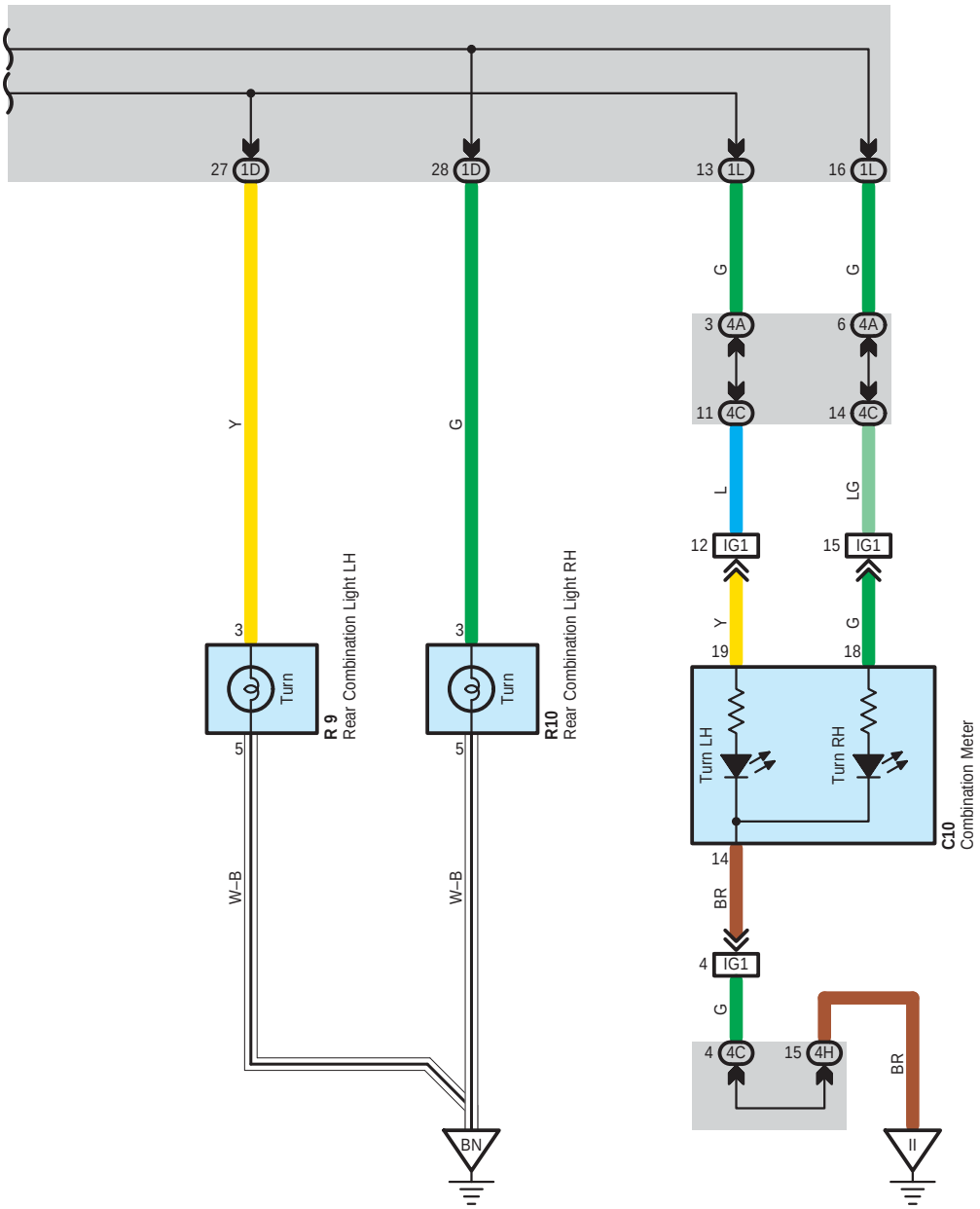
27 1D
28 1D
13 1L
16 1L
G
G
3 4A
6 4A
11 4C
14 4C
L
LG
12 IG1
15 IG1
Y
G
19
18
Y
G
3
3
Turn
Turn
R 9
Rear Combination Light LH
R10
Rear Combination Light RH
5
5
W–B
W–B
Turn LH
Turn RH
C10
Combination Meter
14
BR
4 IG1
G
4 4C
15 4H
BR
BN
II

Turn Signal and Hazard Warning Light

: Parts Location

Code	See Page	Code	See Page	Code	See Page
C10	49	F8	46	J4	47
C11	49	H11	49	R9	54
F7	46	J2	47	R10	54

: Relay Blocks

Code	See Page	Relay Blocks (Relay Block Location)
3	22	Engine Room R/B (Engine Compartment Left)

: Junction Block and Wire Harness Connector

Code	See Page	Junction Block and Wire Harness (Connector Location)
1A	30	Engine Room Main Wire and Driver Side J/B (Lower Finish Panel)
1D	30	Floor Wire and Driver Side J/B (Lower Finish Panel)
1E	30	Instrument Panel Wire and Driver Side J/B (Lower Finish Panel)
1L	31	
4A	38	Instrument Panel Wire and Center Connector No.1 (Behind the Combination Meter)
4B		
4C		
4G		
4H		

: Connector Joining Wire Harness and Wire Harness

Code	See Page	Joining Wire Harness and Wire Harness (Connector Location)
IG1	59	Instrument Panel Wire and Instrument Panel No.2 Wire (Behind the Combination Meter)

: Ground Points

Code	See Page	Ground Points Location
EA	56	Right Side of the Fender Apron
EE	56	Left Side of the Suspension Tower
IH	58	Cowl Side Panel LH
II	58	Instrument Panel Brace LH
BN	60	Lower Back Panel Center

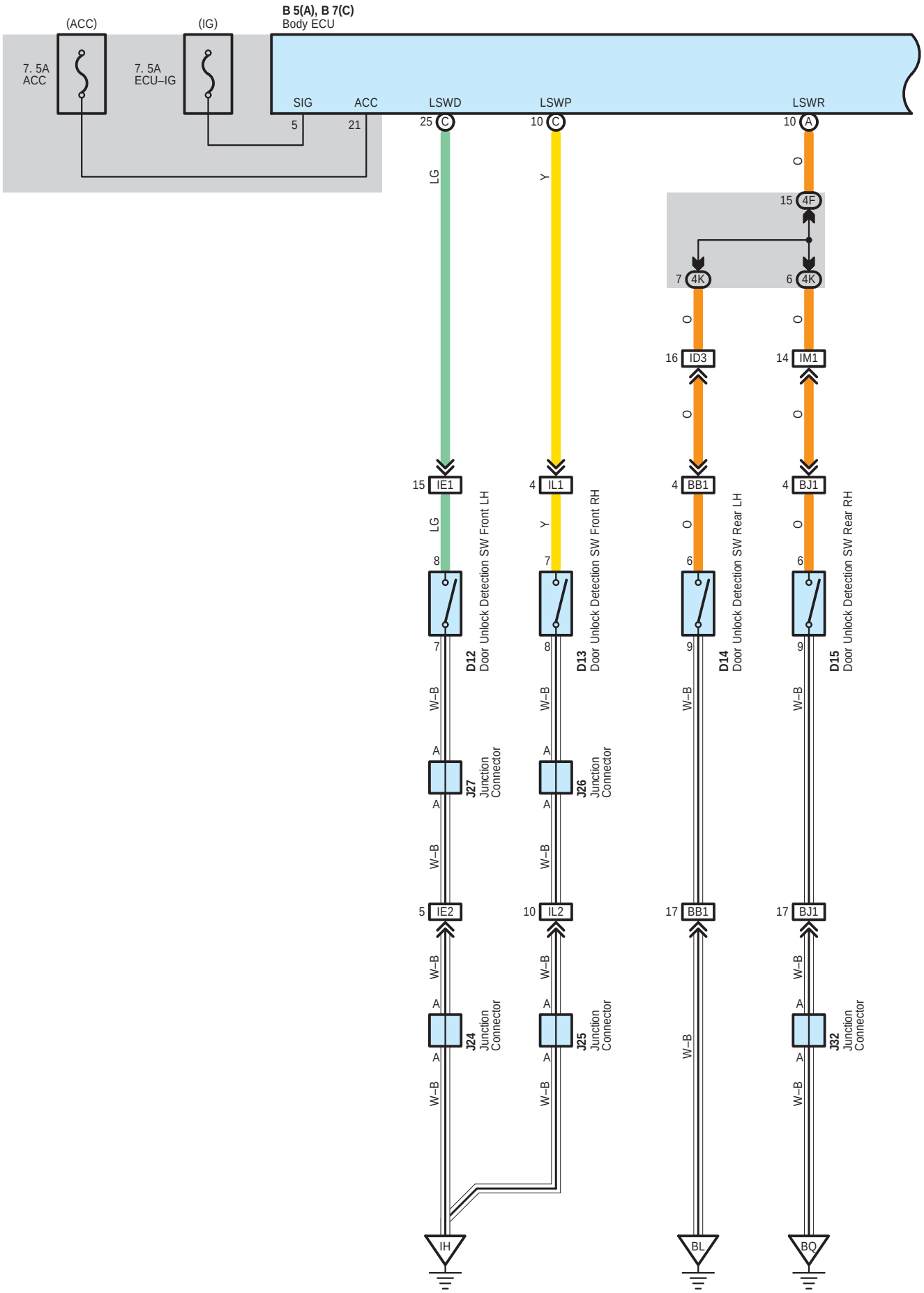
B 5(A), B 7(C)
Body ECU
(ACC)
(IG)
7. 5A
ACC
7. 5A
ECU–IG
SIG
ACC
5
21
LSWD
LSWP
LSWR
25 C
10 C
10 A
LG
Y
O
15 4F
7 4K
6 4K
16 ID3
14 IM1
15 IE1
4 IL1
4 BB1
4 BJ1
D12 Door Unlock Detection SW Front LH
D13 Door Unlock Detection SW Front RH
D14 Door Unlock Detection SW Rear LH
D15 Door Unlock Detection SW Rear RH
W–B
A
J27 Junction Connector
J26 Junction Connector
5 IE2
10 IL2
17 BB1
17 BJ1
J24 Junction Connector
J25 Junction Connector
J32 Junction Connector
IH
BL
BQ

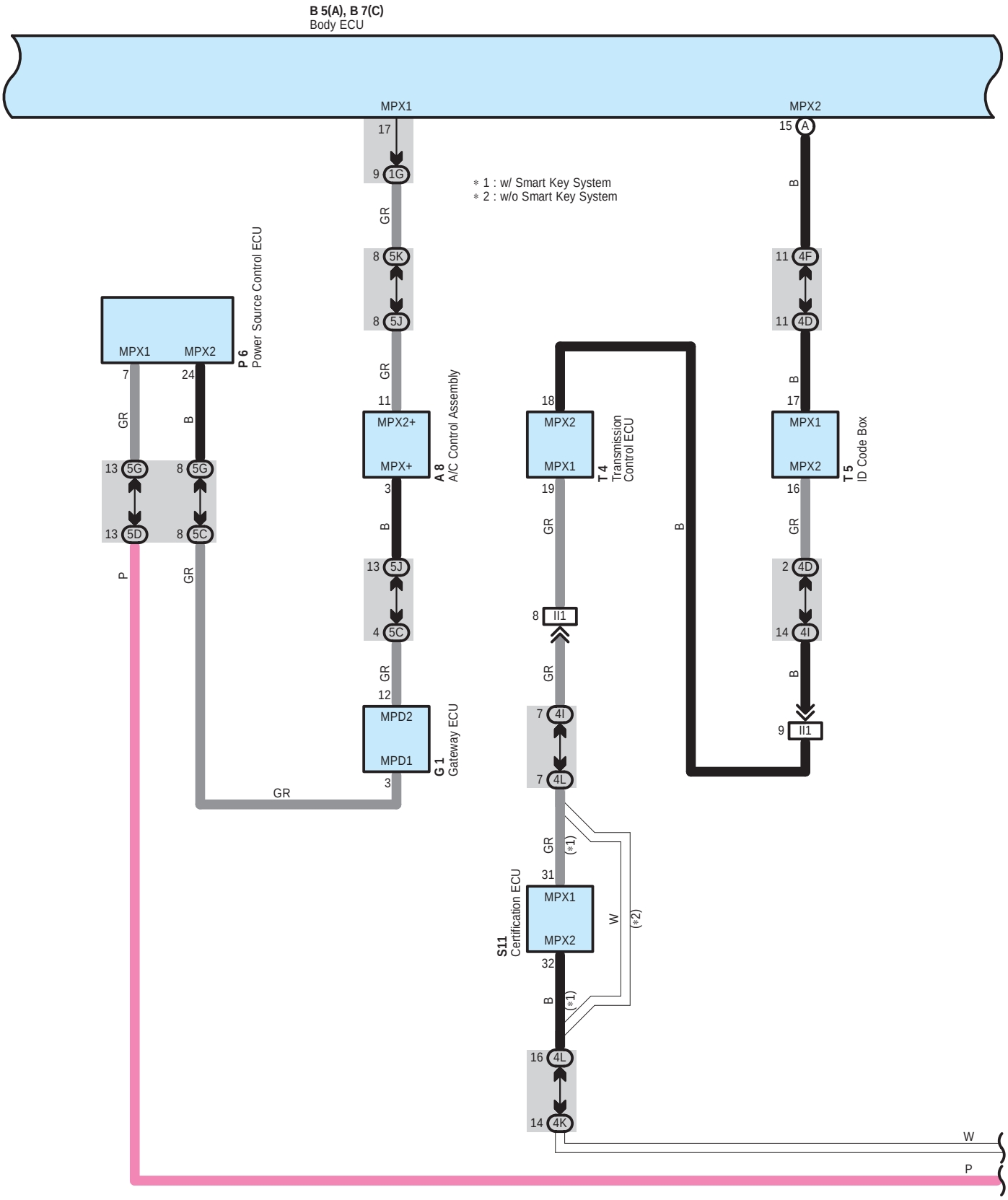
B 5(A), B 7(C)
Body ECU
MPX1
MPX2
17
9 1G
15 A
＊1 : w/ Smart Key System
＊2 : w/o Smart Key System
GR
B
8 5K
8 5J
11 4F
11 4D
P 6
Power Source Control ECU
MPX1
MPX2
7
24
GR
B
13 5G
8 5G
13 5D
8 5C
P
GR
11
MPX2+
MPX+
A 8
A/C Control Assembly
3
B
13 5J
4 5C
GR
12
MPD2
MPD1
G 1
Gateway ECU
3
GR
18
MPX2
MPX1
T 4
Transmission Control ECU
19
GR
8 II1
GR
7 4I
7 4L
B
17
MPX1
MPX2
T 5
ID Code Box
16
GR
2 4D
14 4I
B
9 II1
GR
(＊1)
31
MPX1
MPX2
S11
Certification ECU
W
(＊2)
32
B
(＊1)
16 4L
14 4K
W
P

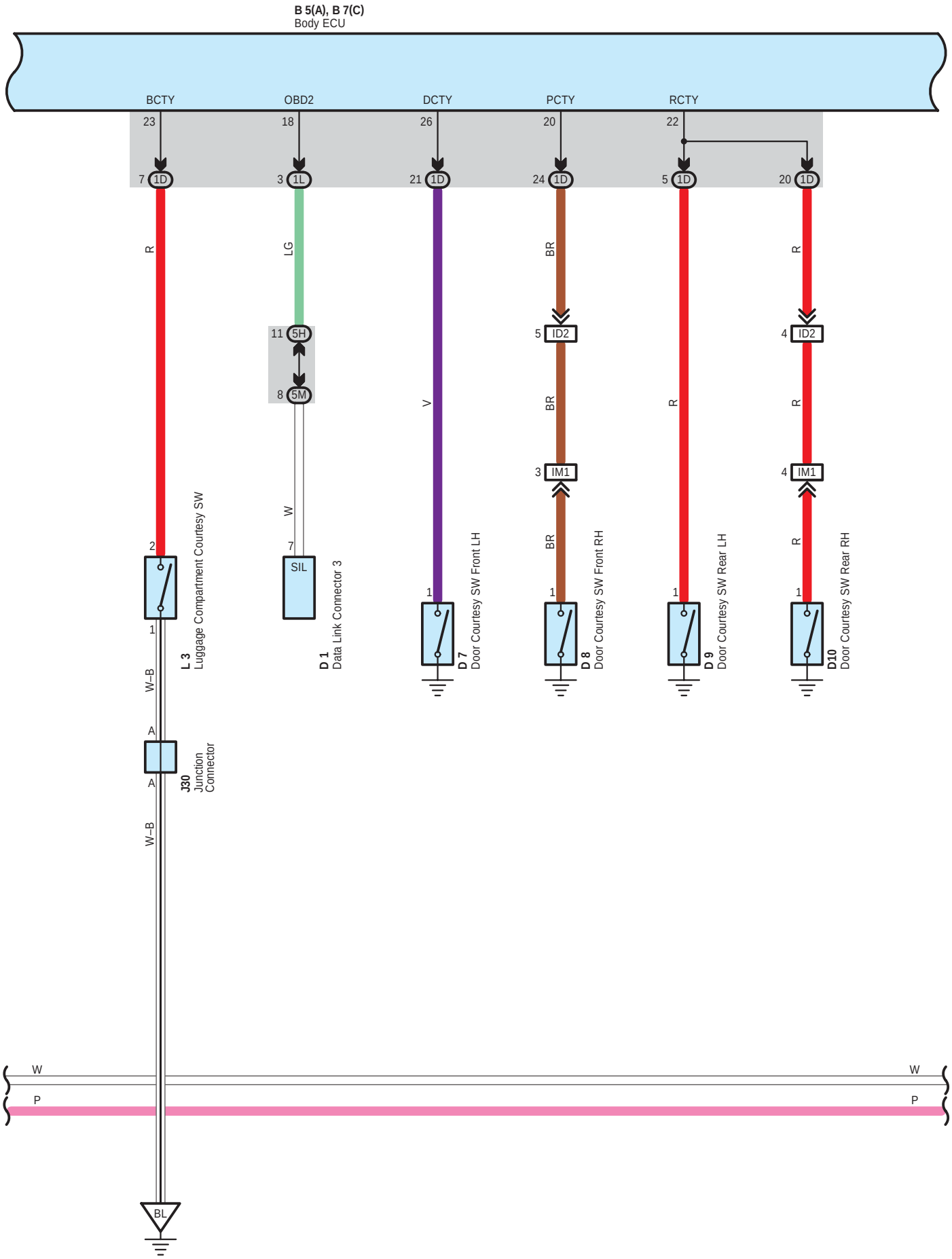
B 5(A), B 7(C)
Body ECU
BCTY
OBD2
DCTY
PCTY
RCTY
23
18
26
20
22
7 1D
3 1L
21 1D
24 1D
5 1D
20 1D
R
LG
V
BR
R
11 5H
8 5M
5 ID2
4 ID2
3 IM1
4 IM1
W
7
SIL
D 1
Data Link Connector 3
D 7
Door Courtesy SW Front LH
D 8
Door Courtesy SW Front RH
D 9
Door Courtesy SW Rear LH
D10
Door Courtesy SW Rear RH
2
1
L 3
Luggage Compartment Courtesy SW
W-B
A
A
J30
Junction Connector
W-B
W
P
W
P
BL

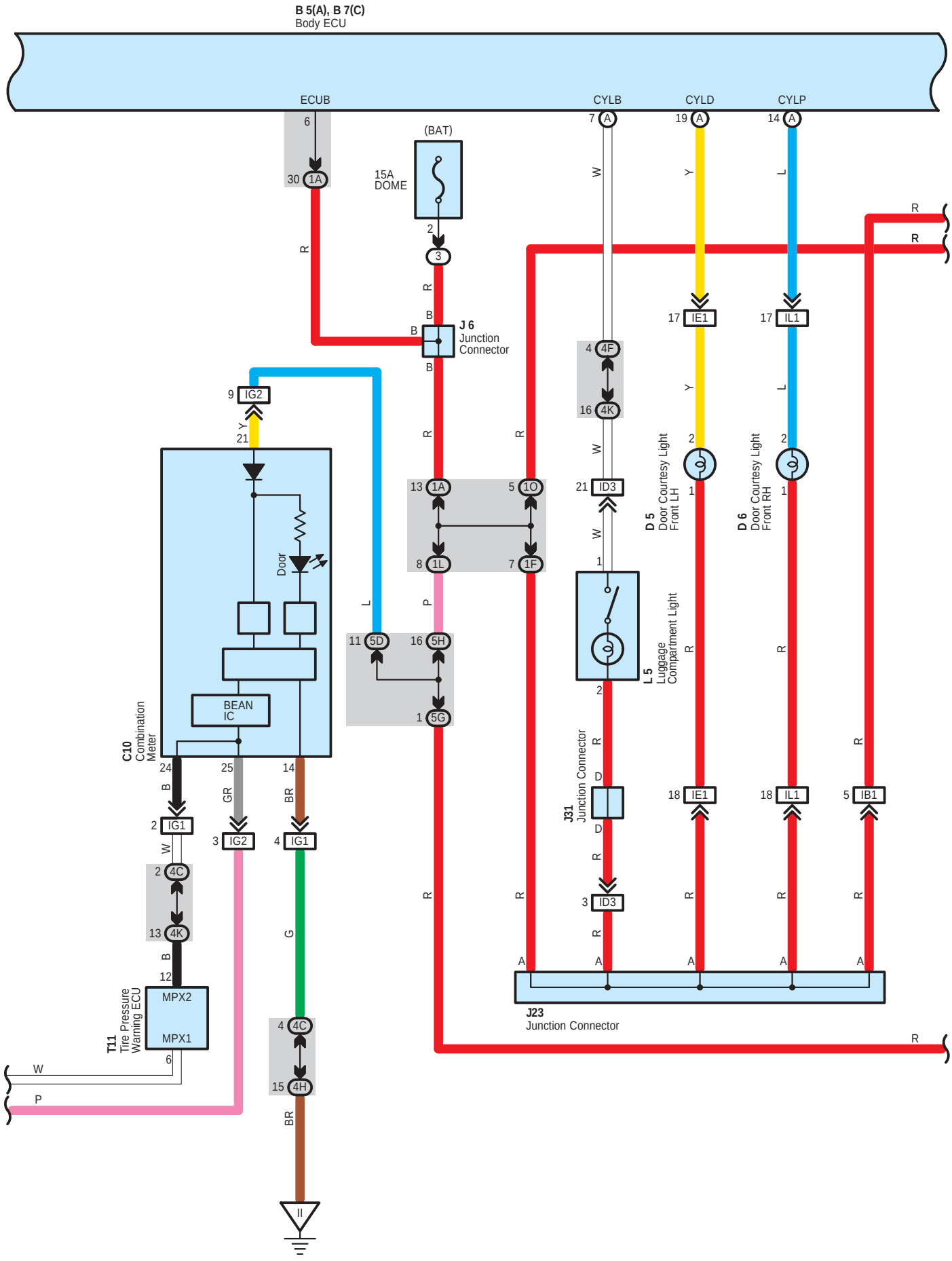
B 5(A), B 7(C)
Body ECU
ECUB
CYLB
CYLD
CYLP
(BAT)
15A
DOME
J 6
Junction
Connector
C10
Combination
Meter
BEAN
IC
Door
T11
Tire Pressure
Warning ECU
MPX2
MPX1
J31
Junction Connector
D 5
Door Courtesy Light
Front LH
D 6
Door Courtesy Light
Front RH
L 5
Luggage
Compartment Light
J23
Junction Connector

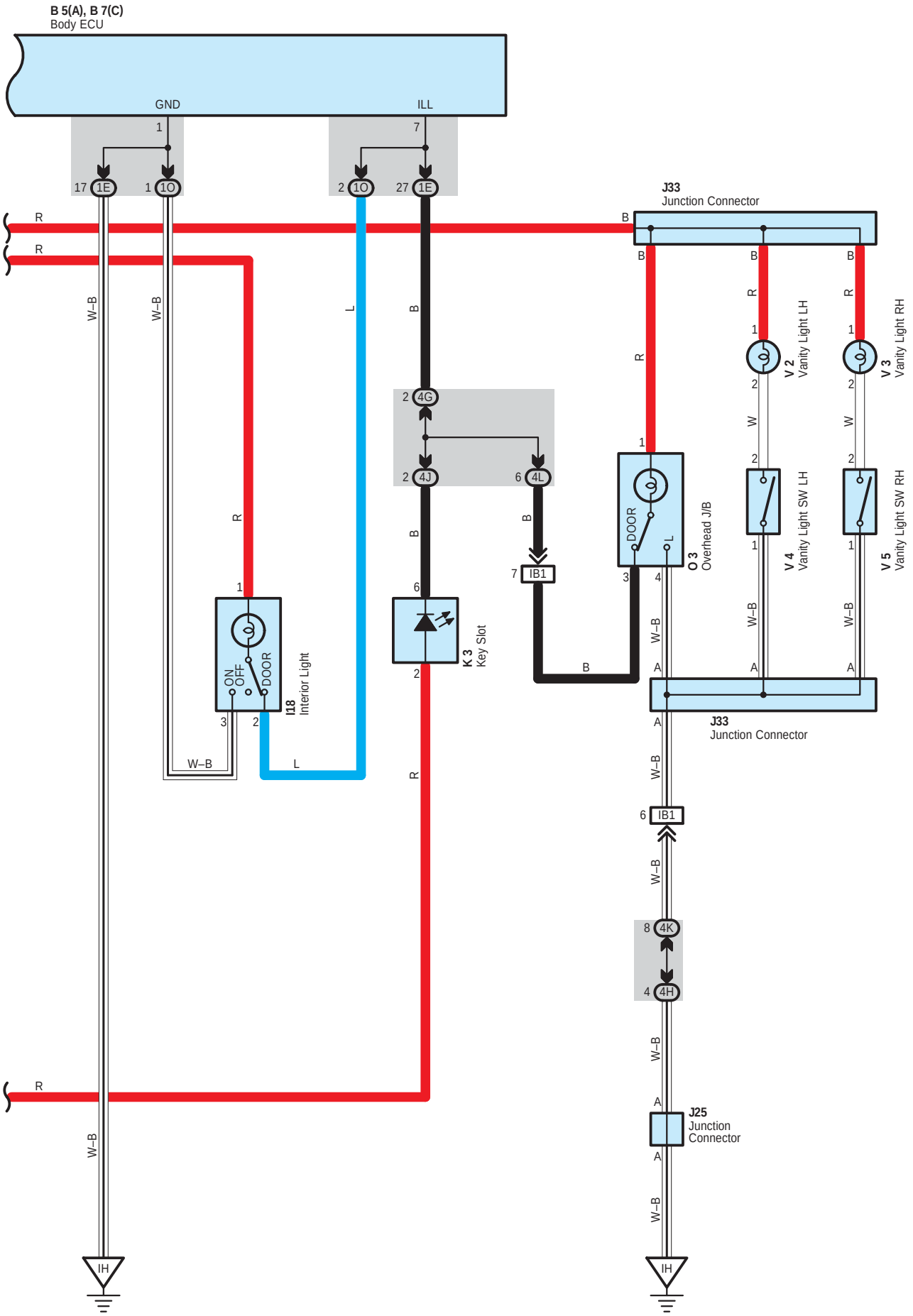
B 5(A), B 7(C)
Body ECU
GND
ILL
1
7
17 1E
1 1O
2 1O
27 1E
J33
Junction Connector
R
B
W–B
L
2 4G
2 4J
6 4L
7 IB1
1
3
4
DOOR
O 3
Overhead J/B
V 2
Vanity Light LH
V 3
Vanity Light RH
V 4
Vanity Light SW LH
V 5
Vanity Light SW RH
ON
OFF
DOOR
I18
Interior Light
K 3
Key Slot
A
J33
Junction Connector
6 IB1
8 4K
4 4H
J25
Junction
Connector
IH

System Outline

Interior light operates with control of body ECU.

Illumination Control

Lighting function of interior light, overhead J/B, electrical key holder

When any door is opened, signal is sent from door courtesy SW to body ECU. Interior light, overhead J/B and key slot light on gradually from unlit condition to fully lit condition within 1.5 seconds if lighting SW of interior light and overhead J/B is set for door.

After that, when all the doors are shut and any one of the door is unlocked, interior light, overhead J/B and key slot are lit up for about 15 seconds (Timer lighting) and then are lit off gradually.

Under conditions that power SW is set at OFF position and all the doors are closed, when any one of the door is unlocked, interior light, overhead J/B and key slot light on gradually from unlit condition to fully lit condition within 1.5 seconds, stay on for the certain time (Timer lighting) and then light off gradually. If power SW is turned from OFF position to ACC ON or IG ON position during timer lighting, the timer lighting function is cut off immediately and the light goes off gradually.

Even though timer lighting conditions are satisfied when power SW is at ACC ON or IG ON position, the light does not stay on for certain time (For 15 sec.) after lighting, but goes off gradually.

All the doors are locked during timer lighting, the timer lighting function is cut off immediately and the light goes off gradually.

○ : Parts Location

Code	See Page	Code	See Page	Code	See Page
A8	48	D15	52	L3	53
B5 A	48	G1	49	L5	53
B7 C	48	I18	53	O3	54
C10	49	J6	50	P6	51
D1	49	J23	50	S11	51
D5	52	J24	50	T4	51
D6	52	J25	50	T5	51
D7	52	J26	53	T11	51
D8	52	J27	53	V2	55
D9	52	J30	53	V3	55
D10	52	J31	53	V4	55
D12	52	J32	53	V5	55
D13	52	J33	53		
D14	52	K3	50		

⬭ : Relay Blocks

Code	See Page	Relay Blocks (Relay Block Location)
3	22	Engine Room R/B (Engine Compartment Left)

: **Junction Block and Wire Harness Connector**

Code	See Page	Junction Block and Wire Harness (Connector Location)
1A	30	Engine Room Main Wire and Driver Side J/B (Lower Finish Panel)
1D	30	Floor Wire and Driver Side J/B (Lower Finish Panel)
1E	30	Instrument Panel Wire and Driver Side J/B (Lower Finish Panel)
1F		
1G		
1L	31	
1O	30	Roof Wire and Driver Side J/B (Lower Finish Panel)
4C	38	Instrument Panel Wire and Center Connector No.1 (Behind the Combination Meter)
4D		
4F		
4G		
4H		
4I		
4J		
4K		
4L		
5C	42	Instrument Panel Wire and Center Connector No.2 (Instrument Panel Brace RH)
5D		
5G		
5H		
5J		
5K		
5M		

: **Connector Joining Wire Harness and Wire Harness**

Code	See Page	Joining Wire Harness and Wire Harness (Connector Location)
IB1	58	Roof Wire and Instrument Panel Wire (Upper Parts of Front Body Pillar LH)
ID2	58	Instrument Panel Wire and Floor Wire (Left Kick Panel)
ID3		
IE1	58	Front Door LH Wire and Instrument Panel Wire (Left Kick Panel)
IE2		
IG1	59	Instrument Panel Wire and Instrument Panel No.2 Wire (Behind the Combination Meter)
IG2		
II1	59	Engine Wire and Instrument Panel Wire (Behind the Glove Box)
IL1	59	Front Door RH Wire and Instrument Panel Wire (Right Kick Panel)
IL2		
IM1	59	Instrument Panel Wire and Floor No.2 Wire (Right Kick Panel)
BB1	60	Rear Door No.2 Wire and Floor Wire (Left Center Pillar)
BJ1	61	Rear Door No.1 Wire and Floor No.2 Wire (Right Center Pillar)

: **Ground Points**

Code	See Page	Ground Points Location
IH	58	Cowl Side Panel LH
II	58	Instrument Panel Brace LH
BL	60	Rear Side of Left Quarter Panel
BQ	60	Rear Side of Right Quarter Panel

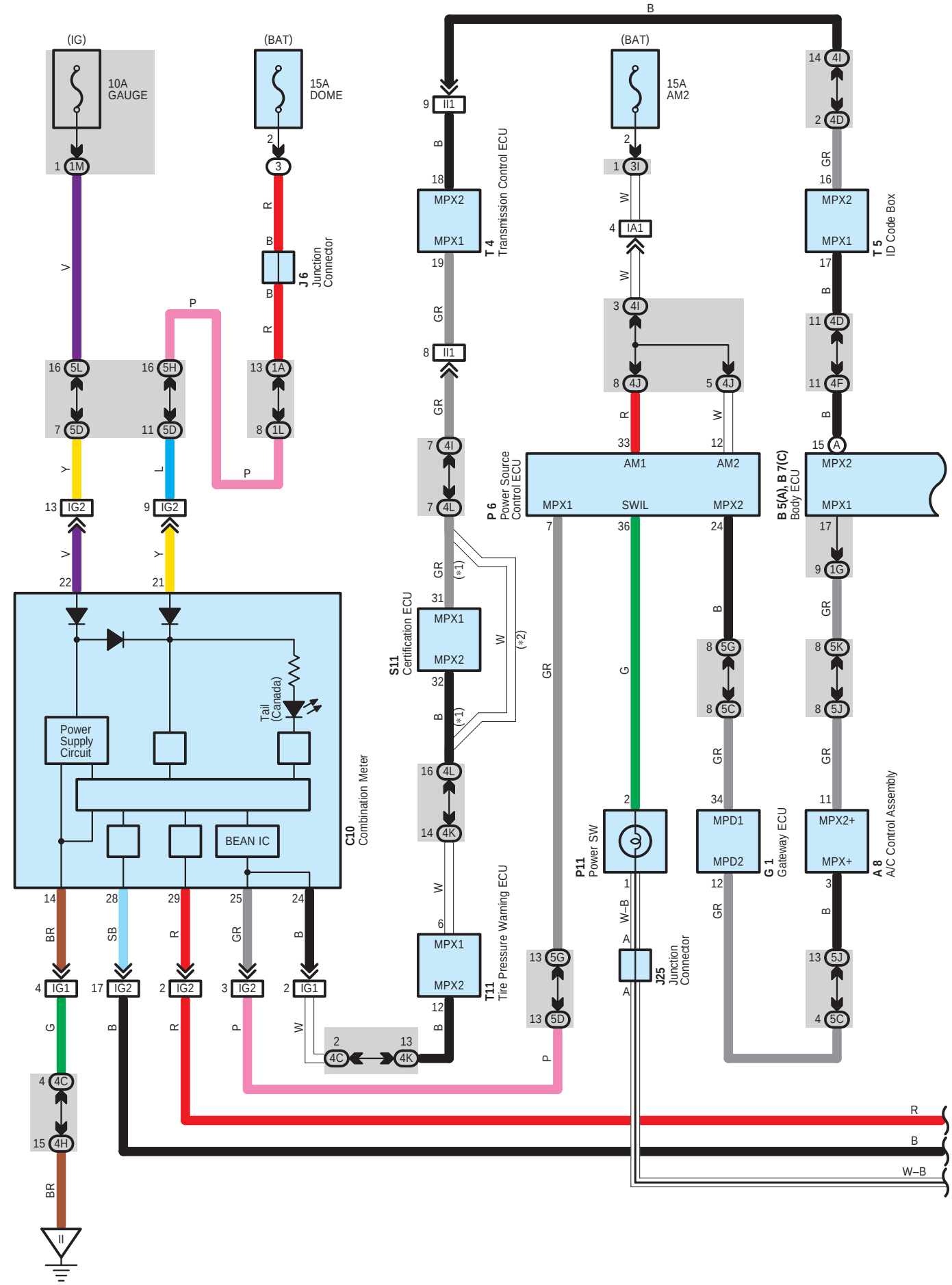
(IG)
10A
GAUGE
(BAT)
15A
DOME
J6
Junction
Connector
(BAT)
15A
AM2
T4
Transmission Control ECU
T5
ID Code Box
P6
Power Source
Control ECU
B5(A), B7(C)
Body ECU
S11
Certification ECU
C10
Combination Meter
Power
Supply
Circuit
Tail
(Canada)
BEAN IC
T11
Tire Pressure Warning ECU
P11
Power SW
J25
Junction
Connector
G1
Gateway ECU
A8
A/C Control Assembly
MPX1
MPX2
AM1
AM2
SWIL
MPD1
MPD2
MPX+
IG1
IG2
(*1)
(*2)

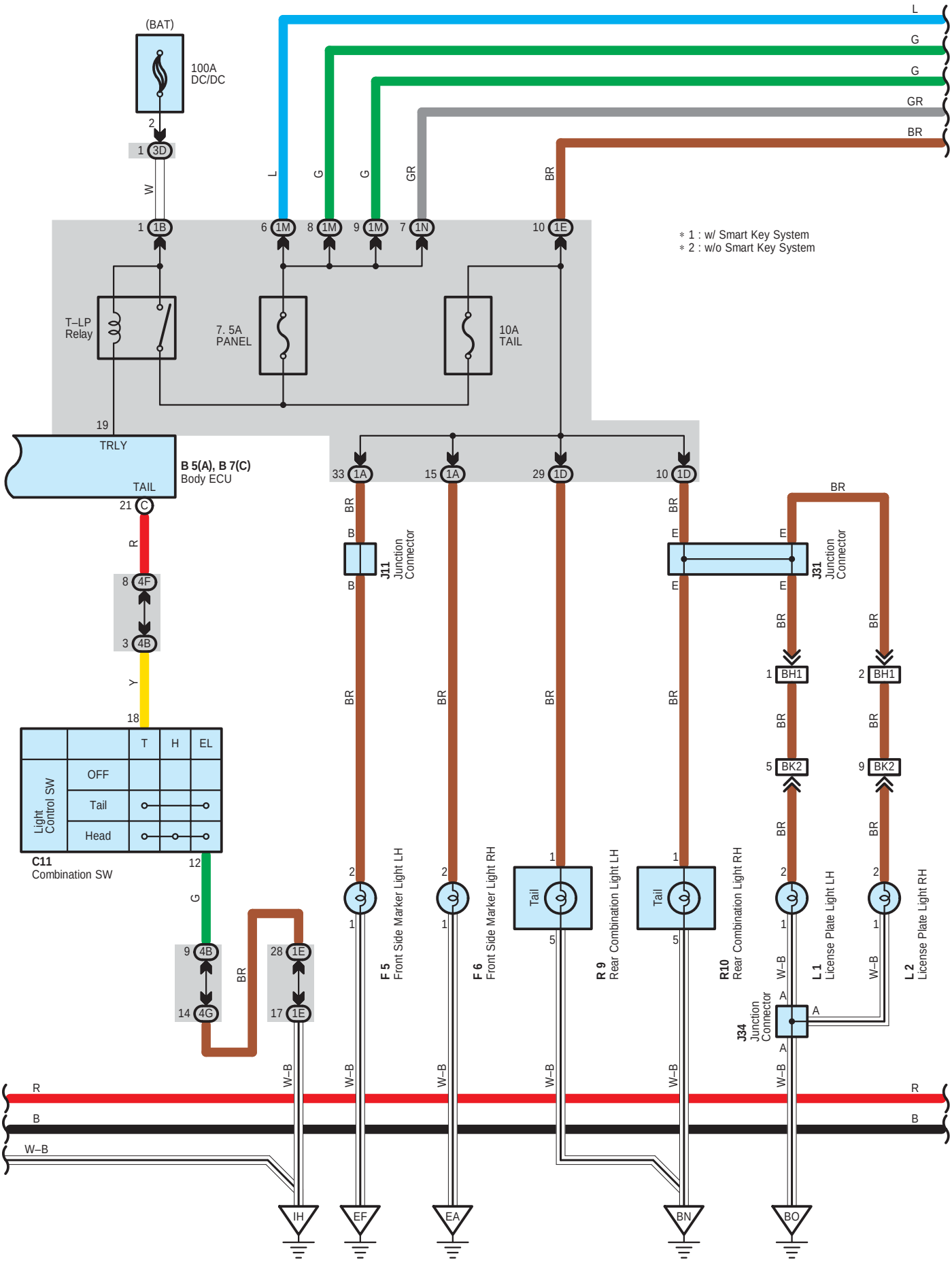
(BAT)
100A
DC/DC
2
1 3D
W
1 1B
L
G
G
GR
BR
6 1M
8 1M
9 1M
7 1N
10 1E
* 1 : w/ Smart Key System
* 2 : w/o Smart Key System
T–LP
Relay
7. 5A
PANEL
10A
TAIL
19
TRLY
TAIL
B 5(A), B 7(C)
Body ECU
21 C
R
8 4F
3 4B
Y
18
T
H
EL
OFF
Tail
Head
Light
Control SW
C11
Combination SW
12
G
9 4B
14 4G
28 1E
17 1E
BR
33 1A
15 1A
29 1D
10 1D
J11
Junction
Connector
J31
Junction
Connector
F 5
Front Side Marker Light LH
F 6
Front Side Marker Light RH
R 9
Rear Combination Light LH
R10
Rear Combination Light RH
Tail
1 BH1
2 BH1
5 BK2
9 BK2
L 1
License Plate Light LH
L 2
License Plate Light RH
J34
Junction
Connector
W–B
R
B
W–B
IH
EF
EA
BN
BO

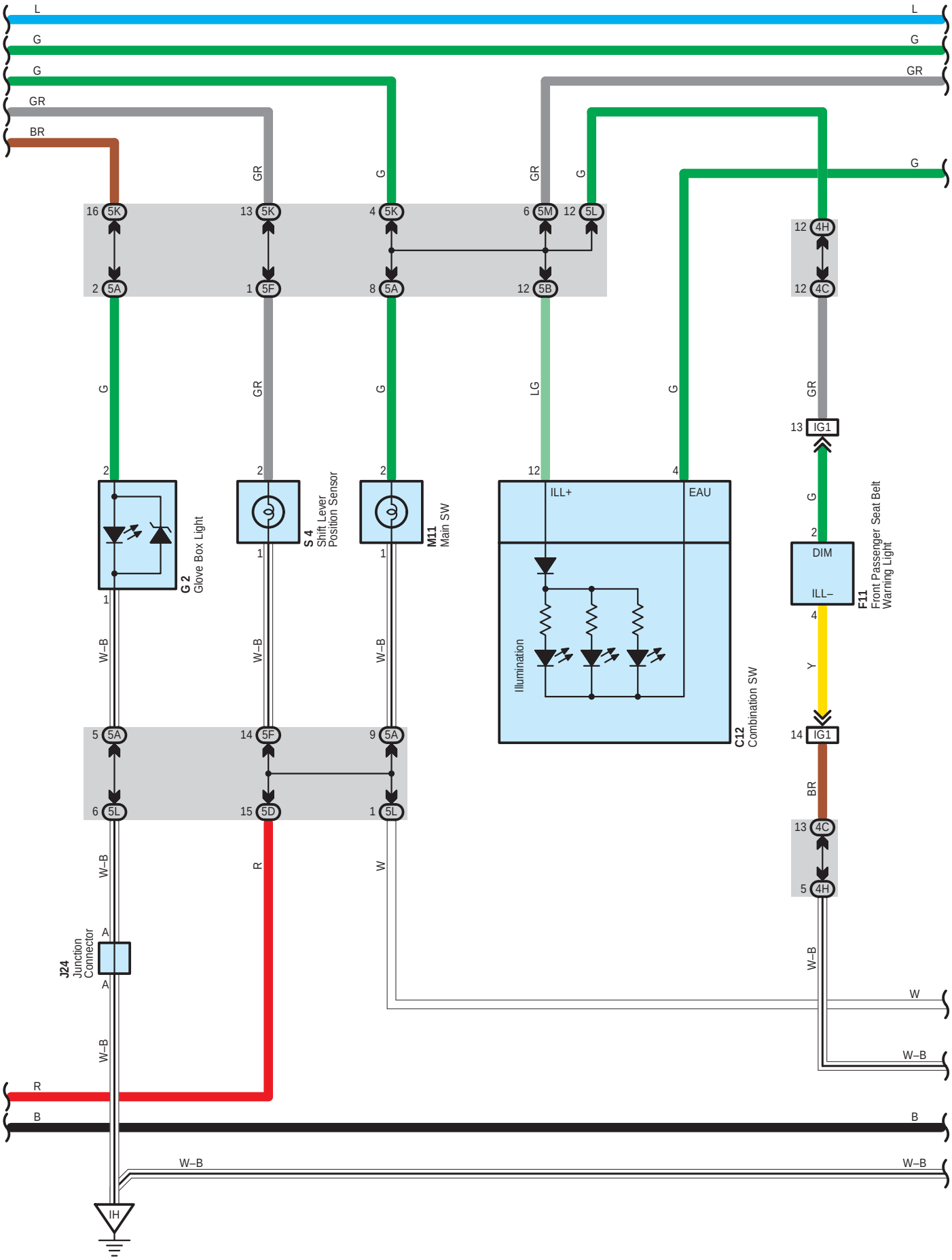
L
G
G
GR
BR
L
G
GR
G
16 5K
13 5K
4 5K
6 5M
12 5L
12 4H
2 5A
1 5F
8 5A
12 5B
12 4C
G
GR
G
LG
G
GR
13 IG1
2
2
2
12
4
G
2
G 2
Glove Box Light
S 4
Shift Lever
Position Sensor
M11
Main SW
ILL+
EAU
DIM
ILL–
F11
Front Passenger Seat Belt
Warning Light
1
1
1
Illumination
C12
Combination SW
W–B
W–B
W–B
4
Y
5 5A
14 5F
9 5A
14 IG1
6 5L
15 5D
1 5L
BR
W–B
R
W
13 4C
5 4H
J24
Junction
Connector
A
A
W–B
W
W–B
R
B
B
W–B
W–B
IH

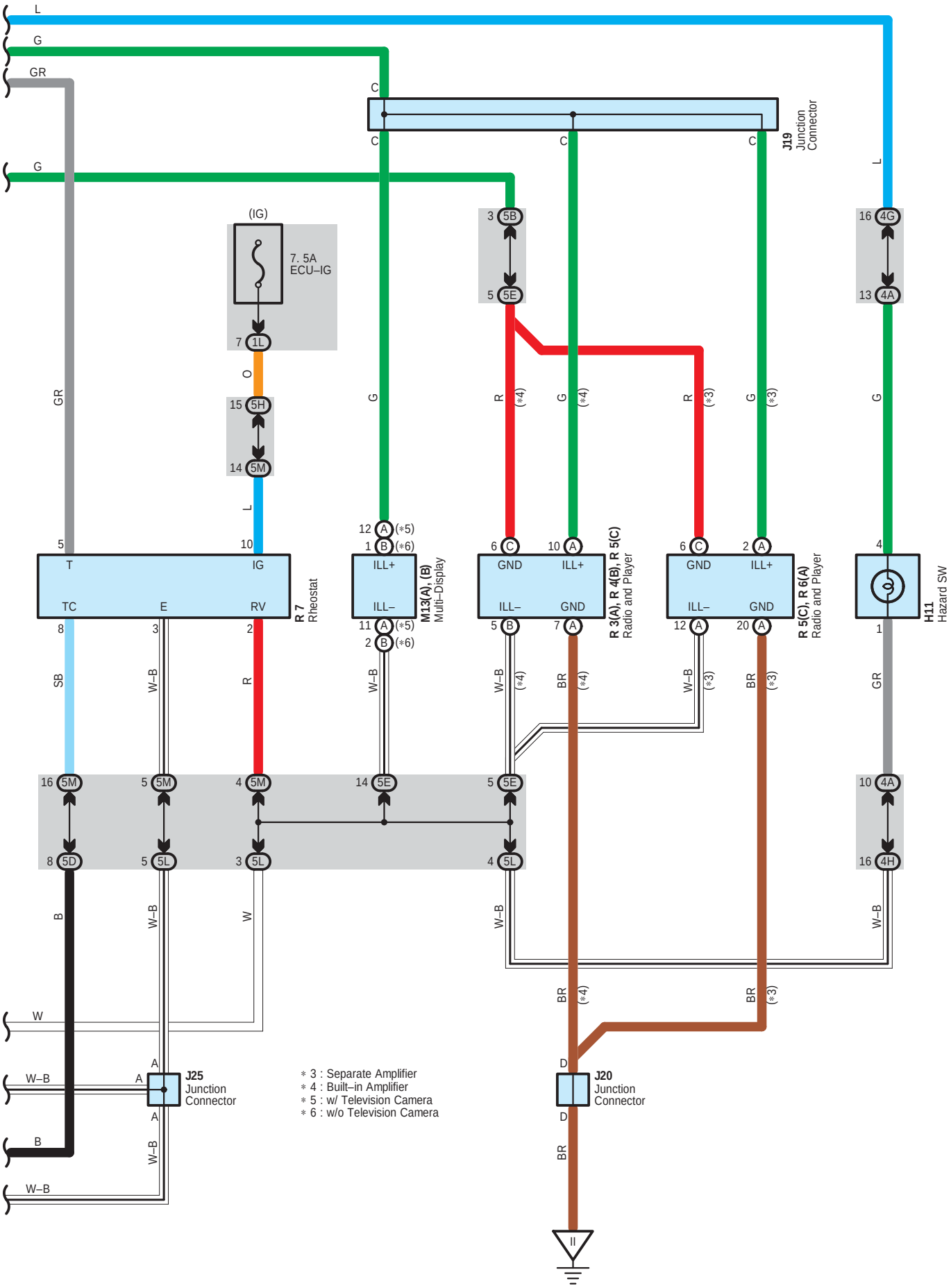
L
G
GR
G
C
C
C
C
J19
Junction
Connector
L
(IG)
7. 5A
ECU–IG
3 5B
5 5E
16 4G
13 4A
7 1L
O
15 5H
14 5M
L
GR
G
R (*4)
G (*4)
R (*3)
G (*3)
G
12 A (*5)
1 B (*6)
11 A (*5)
2 B (*6)
M13(A), (B)
Multi–Display
6 C
10 A
GND
ILL+
ILL–
GND
R 3(A), R 4(B), R 5(C)
Radio and Player
6 C
2 A
GND
ILL+
ILL–
GND
R 5(C), R 6(A)
Radio and Player
4
1
H11
Hazard SW
5
T
IG
TC
E
RV
R 7
Rheostat
8
3
2
SB
W–B
R
W–B
(*4)
BR
(*4)
W–B
(*3)
BR
(*3)
GR
16 5M
5 5M
4 5M
14 5E
5 5E
10 4A
8 5D
5 5L
3 5L
4 5L
16 4H
B
W–B
W
W–B
BR (*4)
BR (*3)
W
W–B
B
W–B
A
A
A
J25
Junction
Connector
D
D
J20
Junction
Connector
BR
* 3 : Separate Amplifier
* 4 : Built–in Amplifier
* 5 : w/ Television Camera
* 6 : w/o Television Camera

Taillight and Illumination

○ : Parts Location

Code	See Page	Code	See Page	Code	See Page
A8	48	J11	50	P11	51
B5 A	48	J19	50	R3 A	51
B7 C	48	J20	50	R4 B	51
C10	49	J24	50	R5 C	51
C11	49	J25	50	R6 A	51
C12	49	J31	53	R7	51
F5	46	J34	53	R9	54
F6	46	L1	53	R10	54
F11	49	L2	53	S4	51
G1	49	M11	50	S11	51
G2	49	M13 A	50	T4	51
H11	49	M13 B	50	T5	51
J6	50	P6	51	T11	51

▭ : Relay Blocks

Code	See Page	Relay Blocks (Relay Block Location)
3	22	Engine Room R/B (Engine Compartment Left)

: **Junction Block and Wire Harness Connector**

Code	See Page	Junction Block and Wire Harness (Connector Location)
1A	30	Engine Room Main Wire and Driver Side J/B (Lower Finish Panel)
1B		
1D	30	Floor Wire and Driver Side J/B (Lower Finish Panel)
1E	30	Instrument Panel Wire and Driver Side J/B (Lower Finish Panel)
1G		
1L	31	
1M		
1N		
3D	23	Engine Room Main Wire and Engine Room J/B (Engine Compartment Left)
3I	24	
4A	38	Instrument Panel Wire and Center Connector No.1 (Behind the Combination Meter)
4B		
4C		
4D		
4F		
4G		
4H		
4I		
4J		
4K		
4L		
5A	42	Instrument Panel Wire and Center Connector No.2 (Instrument Panel Brace RH)
5B		
5C		
5D		
5E		
5F		
5G		
5H		
5J		
5K		
5L		
5M		

: **Connector Joining Wire Harness and Wire Harness**

Code	See Page	Joining Wire Harness and Wire Harness (Connector Location)
IA1	58	Engine Room Main Wire and Instrument Panel Wire (Upper Parts of Front Body Pillar LH)
IG1	59	Instrument Panel Wire and Instrument Panel No.2 Wire (Behind the Combination Meter)
IG2		
II1	59	Engine Wire and Instrument Panel Wire (Behind the Glove Box)
BH1	61	Back Door No.1 Wire and Floor Wire (Rear Side of Roof Panel)
BK2	61	Back Door No.1 Wire and Back Door No.2 Wire (Rear Side of Roof Panel)

: **Ground Points**

Code	See Page	Ground Points Location
EA	56	Right Side of the Fender Apron
EF	56	Left Side of the Suspension Tower
IH	58	Cowl Side Panel LH
II	58	Instrument Panel Brace LH
BN	60	Lower Back Panel Center
BO	60	Center of the Back Door Panel

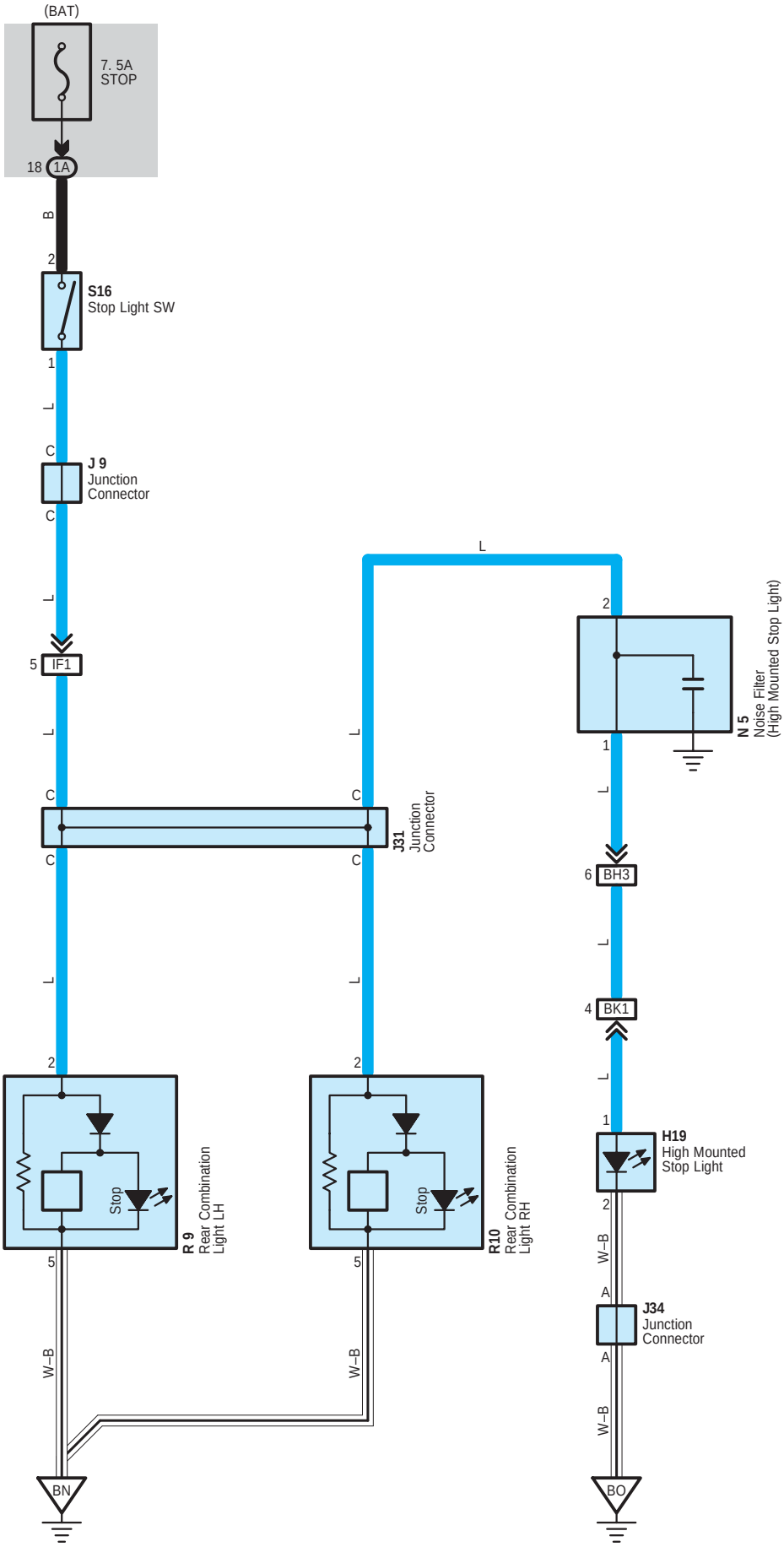
(BAT)
7. 5A
STOP
18
1A
B
2
S16
Stop Light SW
1
L
C
J 9
Junction
Connector
C
L
5
IF1
L
C
C
C
C
J31
Junction
Connector
L
L
2
2
Stop
R 9
Rear Combination
Light LH
Stop
R10
Rear Combination
Light RH
5
5
W–B
W–B
BN
L
2
N 5
Noise Filter
(High Mounted Stop Light)
1
L
6
BH3
L
4
BK1
L
1
H19
High Mounted
Stop Light
2
W–B
A
J34
Junction
Connector
A
W–B
BO

: Parts Location

Code	See Page	Code	See Page	Code	See Page
H19	53	J34	53	R10	54
J9	50	N5	54	S16	51
J31	53	R9	54		

: Junction Block and Wire Harness Connector

Code	See Page	Junction Block and Wire Harness (Connector Location)
1A	30	Engine Room Main Wire and Driver Side J/B (Lower Finish Panel)

: Connector Joining Wire Harness and Wire Harness

Code	See Page	Joining Wire Harness and Wire Harness (Connector Location)
IF1	58	Floor Wire and Engine Room Main Wire (Left Kick Panel)
BH3	61	Back Door No.1 Wire and Floor Wire (Rear Side of Roof Panel)
BK1	61	Back Door No.1 Wire and Back Door No.2 Wire (Rear Side of Roof Panel)

: Ground Points

Code	See Page	Ground Points Location
BN	60	Lower Back Panel Center
BO	60	Center of the Back Door Panel

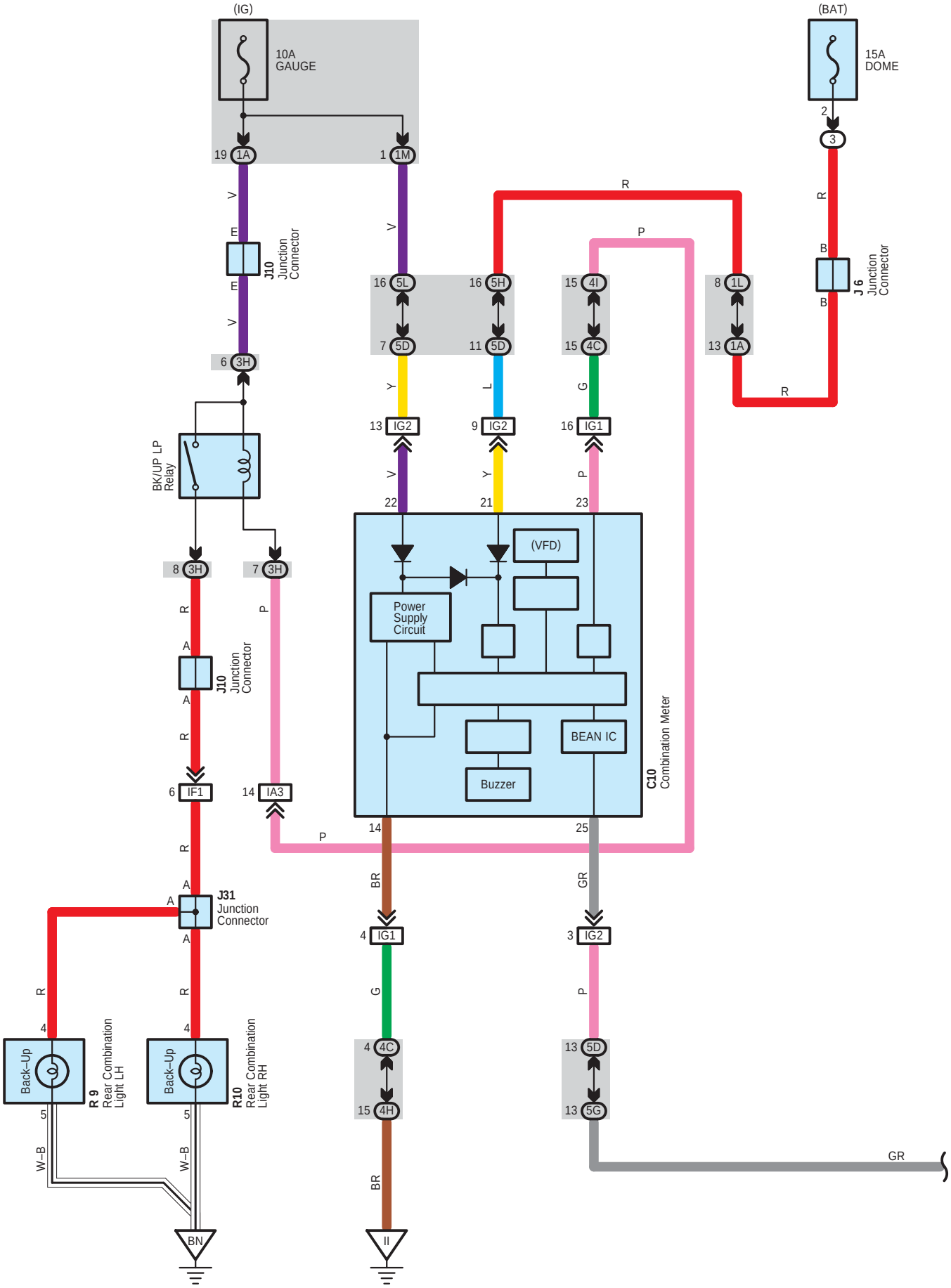
(IG)
10A
GAUGE
19 1A
1 1M
V
E
J10
Junction
Connector
E
V
6 3H
BK/UP LP
Relay
8 3H
7 3H
R
A
J10
Junction
Connector
A
R
6 IF1
14 IA3
R
A
A
J31
Junction
Connector
A
R
R
4
4
Back–Up
R 9
Rear Combination
Light LH
Back–Up
R10
Rear Combination
Light RH
5
5
W–B
W–B
BN
(BAT)
15A
DOME
2
3
R
B
B
J 6
Junction
Connector
R
R
8 1L
13 1A
16 5L
7 5D
16 5H
11 5D
15 4I
15 4C
P
Y
L
G
13 IG2
9 IG2
16 IG1
V
Y
P
22
21
23
(VFD)
Power
Supply
Circuit
BEAN IC
Buzzer
C10
Combination Meter
14
25
P
BR
GR
4 IG1
3 IG2
G
P
4 4C
15 4H
13 5D
13 5G
BR
GR
II

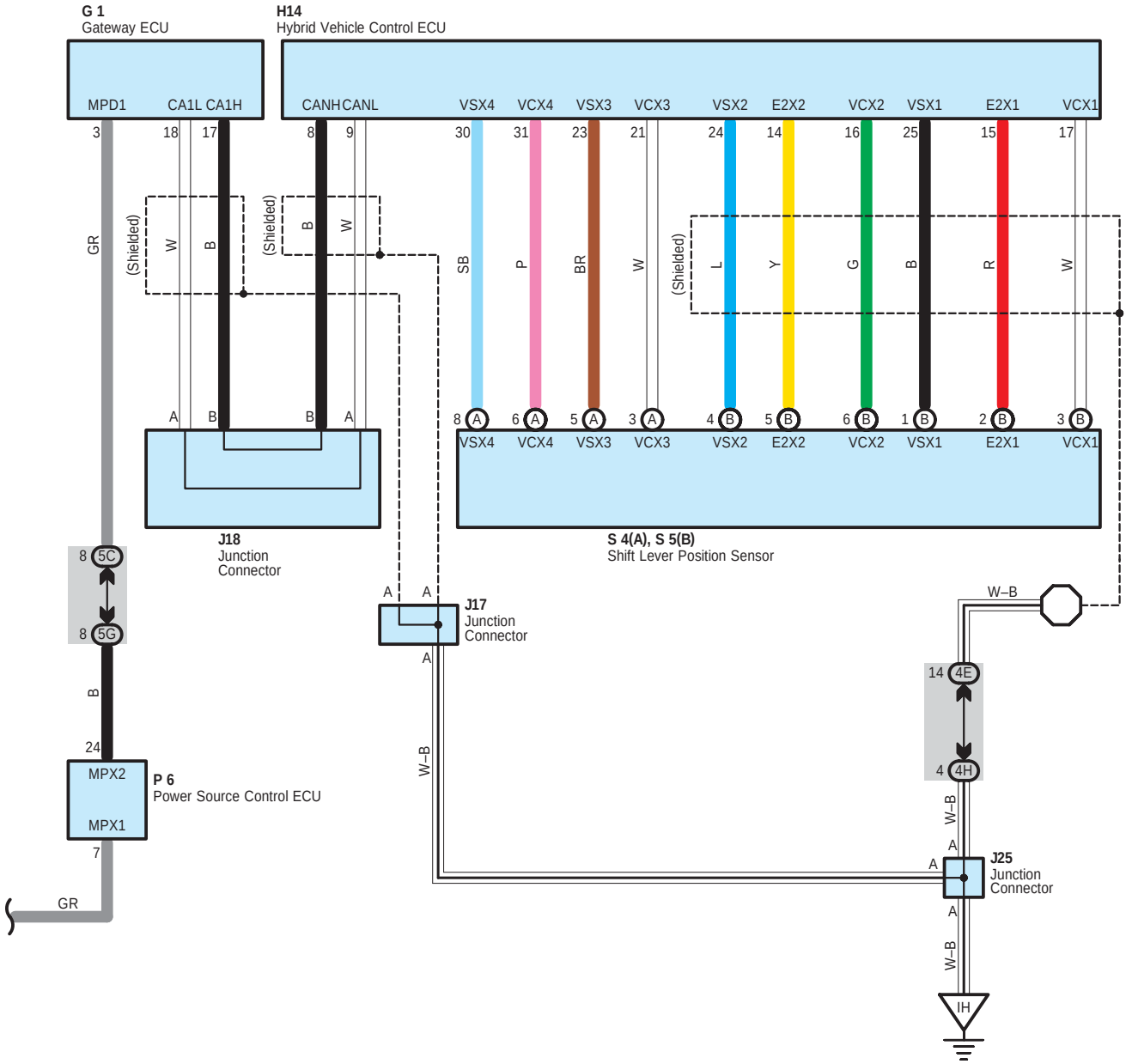
G 1
Gateway ECU
H14
Hybrid Vehicle Control ECU
MPD1
CA1L CA1H
CANH CANL
VSX4 VCX4 VSX3 VCX3 VSX2 E2X2 VCX2 VSX1 E2X1 VCX1
3
18 17
8 9
30 31 23 21 24 14 16 25 15 17
GR
(Shielded)
W
B
(Shielded)
B
W
SB P BR W
(Shielded)
L Y G B R W
A B B A
8 A 6 A 5 A 3 A 4 B 5 B 6 B 1 B 2 B 3 B
VSX4 VCX4 VSX3 VCX3 VSX2 E2X2 VCX2 VSX1 E2X1 VCX1
J18
Junction
Connector
S 4(A), S 5(B)
Shift Lever Position Sensor
8 5C
8 5G
B
24
MPX2
MPX1
7
GR
P 6
Power Source Control ECU
A A
J17
Junction
Connector
A
W–B
W–B
14 4E
4 4H
W–B
A
A
J25
Junction
Connector
A
W–B
IH

Back–Up Light

: Parts Location

Code	See Page	Code	See Page	Code		See Page
C10	49	J17	50	R9		54
G1	49	J18	50	R10		54
H14	49	J25	50	S4	A	51
J6	50	J31	53	S5	B	51
J10	50	P6	51			

: Relay Blocks

Code	See Page	Relay Blocks (Relay Block Location)
3	22	Engine Room R/B (Engine Compartment Left)

: Junction Block and Wire Harness Connector

Code	See Page	Junction Block and Wire Harness (Connector Location)
1A	30	Engine Room Main Wire and Driver Side J/B (Lower Finish Panel)
1L	31	Instrument Panel Wire and Driver Side J/B (Lower Finish Panel)
1M		
3H	24	Engine Room Main Wire and Engine Room J/B (Engine Compartment Left)
4C	38	Instrument Panel Wire and Center Connector No.1 (Behind the Combination Meter)
4E		
4H		
4I		
5C	42	Instrument Panel Wire and Center Connector No.2 (Instrument Panel Brace RH)
5D		
5G		
5H		
5L		

: Connector Joining Wire Harness and Wire Harness

Code	See Page	Joining Wire Harness and Wire Harness (Connector Location)
IA3	58	Engine Room Main Wire and Instrument Panel Wire (Upper Parts of Front Body Pillar LH)
IF1	58	Floor Wire and Engine Room Main Wire (Left Kick Panel)
IG1	59	Instrument Panel Wire and Instrument Panel No.2 Wire (Behind the Combination Meter)
IG2		

: Ground Points

Code	See Page	Ground Points Location
IH	58	Cowl Side Panel LH
II	58	Instrument Panel Brace LH
BN	60	Lower Back Panel Center

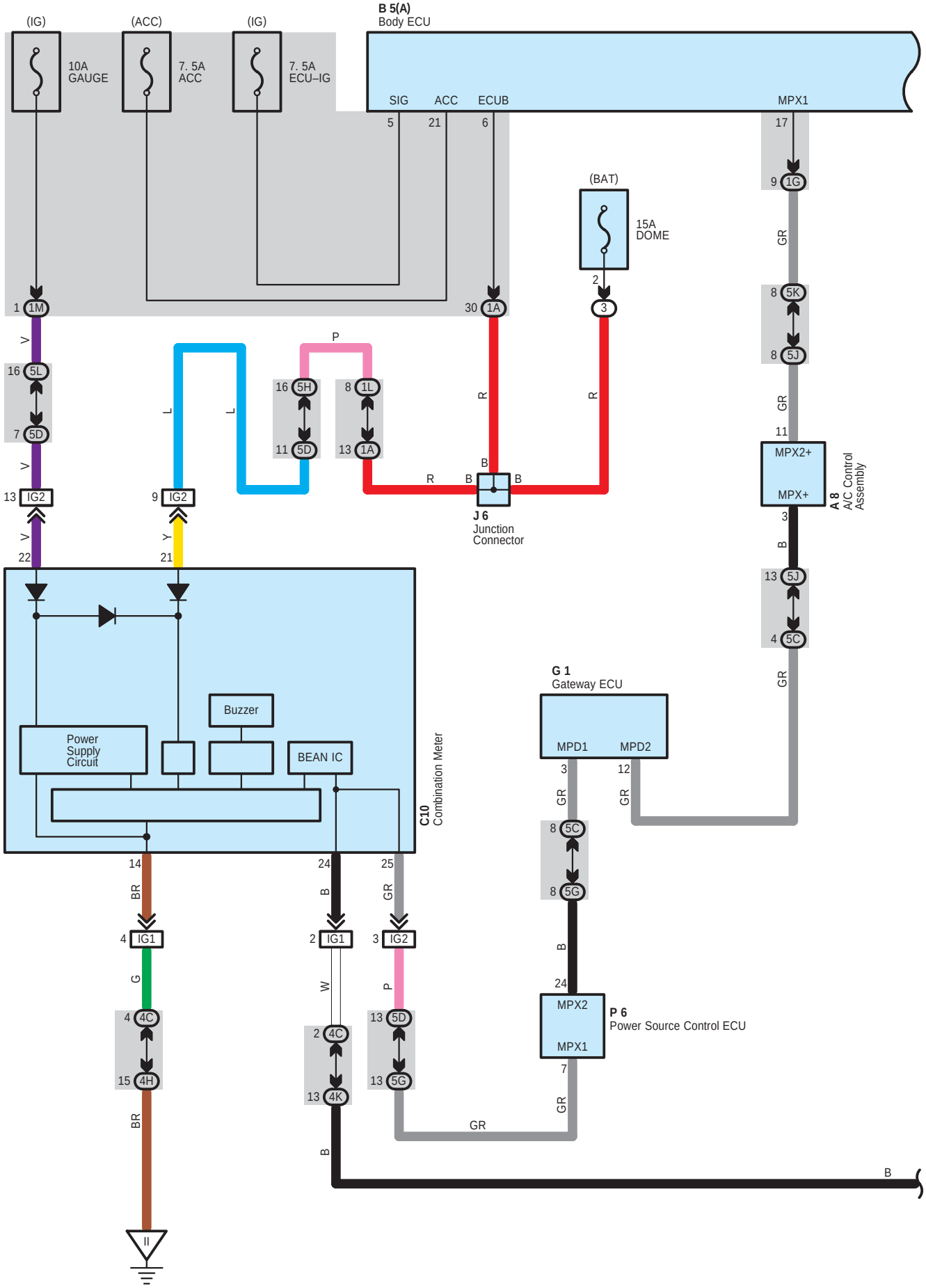
(IG)
(ACC)
(IG)
10A
GAUGE
7. 5A
ACC
7. 5A
ECU–IG
B 5(A)
Body ECU
SIG
ACC
ECUB
MPX1
5
21
6
17
(BAT)
15A
DOME
9 1G
GR
8 5K
8 5J
GR
11
MPX2+
MPX+
A 8
A/C Control
Assembly
3
B
13 5J
4 5C
GR
1 1M
V
16 5L
7 5D
V
13 IG2
22
V
9 IG2
Y
21
L
L
P
16 5H
11 5D
8 1L
13 1A
R
R
30 1A
2
3
B
R
B
B
J 6
Junction
Connector
Buzzer
Power
Supply
Circuit
BEAN IC
C10
Combination Meter
G 1
Gateway ECU
MPD1
MPD2
3
12
GR
GR
8 5C
8 5G
B
24
MPX2
MPX1
P 6
Power Source Control ECU
7
GR
14
BR
4 IG1
G
4 4C
15 4H
BR
24
B
2 IG1
W
2 4C
13 4K
25
GR
3 IG2
P
13 5D
13 5G
GR
B
B

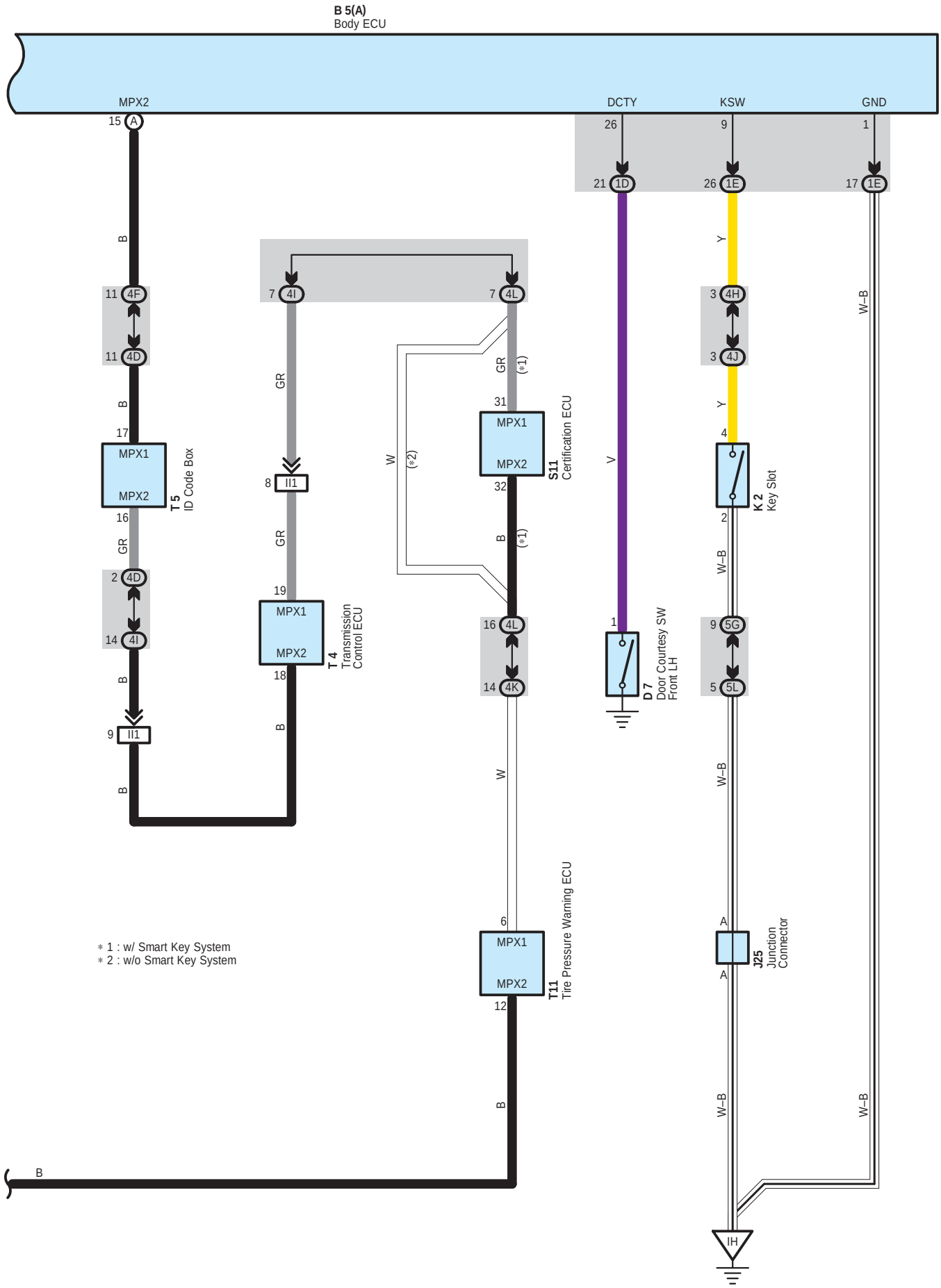
B 5(A)
Body ECU
MPX2
DCTY
KSW
GND
15 A
26
9
1
21 1D
26 1E
17 1E
B
Y
W–B
11 4F
7 4I
7 4L
3 4H
11 4D
GR
(*1)
3 4J
B
Y
17
31
MPX1
MPX2
S11
Certification ECU
V
4
MPX1
MPX2
T 5
ID Code Box
W
(*2)
8 II1
32
K 2
Key Slot
16
GR
B
(*1)
2
W–B
2 4D
19
16 4L
9 5G
14 4I
MPX1
MPX2
T 4
Transmission
Control ECU
1
D 7
Door Courtesy SW
Front LH
14 4K
5 5L
B
18
W–B
9 II1
W
A
J25
Junction
Connector
6
MPX1
MPX2
T11
Tire Pressure Warning ECU
12
A
B
W–B
W–B
B
IH
* 1 : w/ Smart Key System
* 2 : w/o Smart Key System

Key Reminder

System Outline

Key Reminder System

If the driver's side door is opened with the power supply set at ACC or OFF position and with the electrical key remained in the key slot, signal from key slot is input to TERMINAL KSW of body ECU and that from courtesy SW at driver's side is input to TERMINAL DCTY of body ECU. The signal from body ECU to combination meter activates warning buzzer to send a message to the driver that electrical key remains in the key slot.

: Parts Location

Code	See Page	Code	See Page	Code	See Page
A8	48	J6	50	T4	51
B5 A	48	J25	50	T5	51
C10	49	K2	50	T11	51
D7	52	P6	51		
G1	49	S11	51		

: Relay Blocks

Code	See Page	Relay Blocks (Relay Block Location)
3	22	Engine Room R/B (Engine Compartment Left)

: Junction Block and Wire Harness Connector

Code	See Page	Junction Block and Wire Harness (Connector Location)
1A	30	Engine Room Main Wire and Driver Side J/B (Lower Finish Panel)
1D	30	Floor Wire and Driver Side J/B (Lower Finish Panel)
1E	30	Instrument Panel Wire and Driver Side J/B (Lower Finish Panel)
1G		
1L	31	
1M		
4C	38	Instrument Panel Wire and Center Connector No.1 (Behind the Combination Meter)
4D		
4F		
4H		
4I		
4J		
4K		
4L		
5C	42	Instrument Panel Wire and Center Connector No.2 (Instrument Panel Brace RH)
5D		
5G		
5H		
5J		
5K		
5L		

: Connector Joining Wire Harness and Wire Harness

Code	See Page	Joining Wire Harness and Wire Harness (Connector Location)
IG1	59	Instrument Panel Wire and Instrument Panel No.2 Wire (Behind the Combination Meter)
IG2		
II1	59	Engine Wire and Instrument Panel Wire (Behind the Glove Box)

: Ground Points

Code	See Page	Ground Points Location
IH	58	Cowl Side Panel LH
II	58	Instrument Panel Brace LH

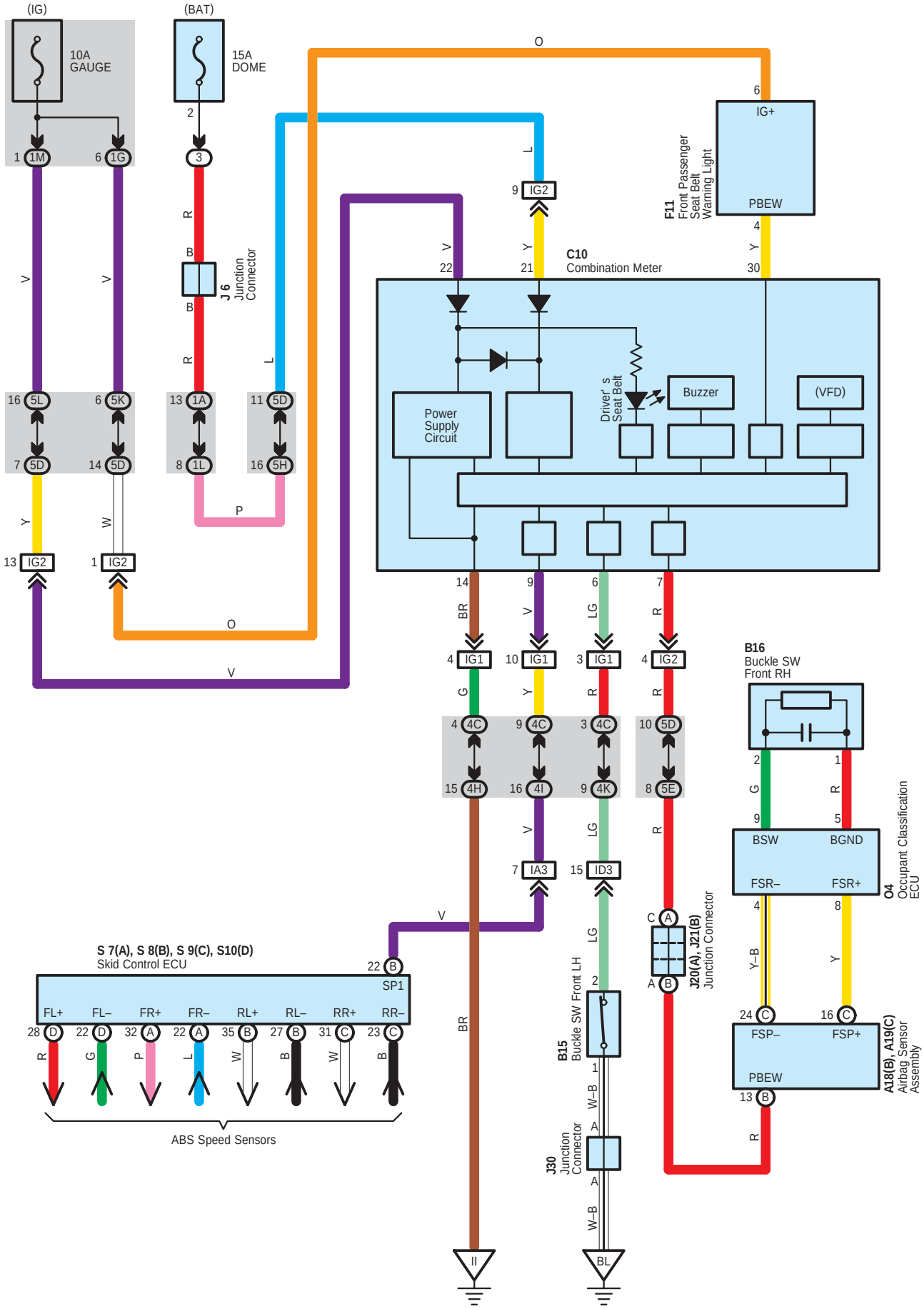
(IG)
10A
GAUGE
(BAT)
15A
DOME
J6
Junction
Connector
F11
Front Passenger
Seat Belt
Warning Light
IG+
PBEW
C10
Combination Meter
Power
Supply
Circuit
Driver's
Seat Belt
Buzzer
(VFD)
B16
Buckle SW
Front RH
BSW
BGND
FSR–
FSR+
O4
Occupant Classification
ECU
FSP–
FSP+
PBEW
A18(B), A19(C)
Airbag Sensor
Assembly
J20(A), J21(B)
Junction Connector
B15
Buckle SW Front LH
J30
Junction
Connector
S 7(A), S 8(B), S 9(C), S10(D)
Skid Control ECU
SP1
FL+
FL–
FR+
FR–
RL+
RL–
RR+
RR–
ABS Speed Sensors
IG1
IG2
IA3
ID3
1M
1G
1A
1L
4C
4I
4H
4K
5D
5E
5H
5K
5L

System Outline

If the driver does not have seat belt fastened when power SW is turned to IG ON position, the indicator in combination meter lights up. Buzzer sound for 6 seconds reminds the driver of seat belt fastening. After that, if seat belt has not been fastened yet, another buzzer sound goes on for 30 seconds when vehicle speed is 15 km/h or more. The buzzer sound also goes on when the driver unfastens seat belt from fastening condition with vehicle speed over 15 km/h.
Sensor installed in front passenger seat detects whether passenger(s) is(are) seated on front passenger seat(s). If a passenger does not have seat belt fastened in front seat, passenger seat belt warning light blinks.

: Parts Location

Code	See Page	Code	See Page	Code	See Page
A18 B	48	F11	49	O4	54
A19 C	48	J6	50	S7 A	51
B15	52	J20 A	50	S8 B	51
B16	52	J21 B	50	S9 C	51
C10	49	J30	53	S10 D	51

: Relay Blocks

Code	See Page	Relay Blocks (Relay Block Location)
3	22	Engine Room R/B (Engine Compartment Left)

: Junction Block and Wire Harness Connector

Code	See Page	Junction Block and Wire Harness (Connector Location)
1A	30	Engine Room Main Wire and Driver Side J/B (Lower Finish Panel)
1G	30	Instrument Panel Wire and Driver Side J/B (Lower Finish Panel)
1L	31	
1M		
4C	38	Instrument Panel Wire and Center Connector No.1 (Behind the Combination Meter)
4H		
4I		
4K		
5D	42	Instrument Panel Wire and Center Connector No.2 (Instrument Panel Brace RH)
5E		
5H		
5K		
5L		

: Connector Joining Wire Harness and Wire Harness

Code	See Page	Joining Wire Harness and Wire Harness (Connector Location)
IA3	58	Engine Room Main Wire and Instrument Panel Wire (Upper Parts of Front Body Pillar LH)
ID3	58	Instrument Panel Wire and Floor Wire (Left Kick Panel)
IG1	59	Instrument Panel Wire and Instrument Panel No.2 Wire (Behind the Combination Meter)
IG2		

: Ground Points

Code	See Page	Ground Points Location
II	58	Instrument Panel Brace LH
BL	60	Rear Side of Left Quarter Panel

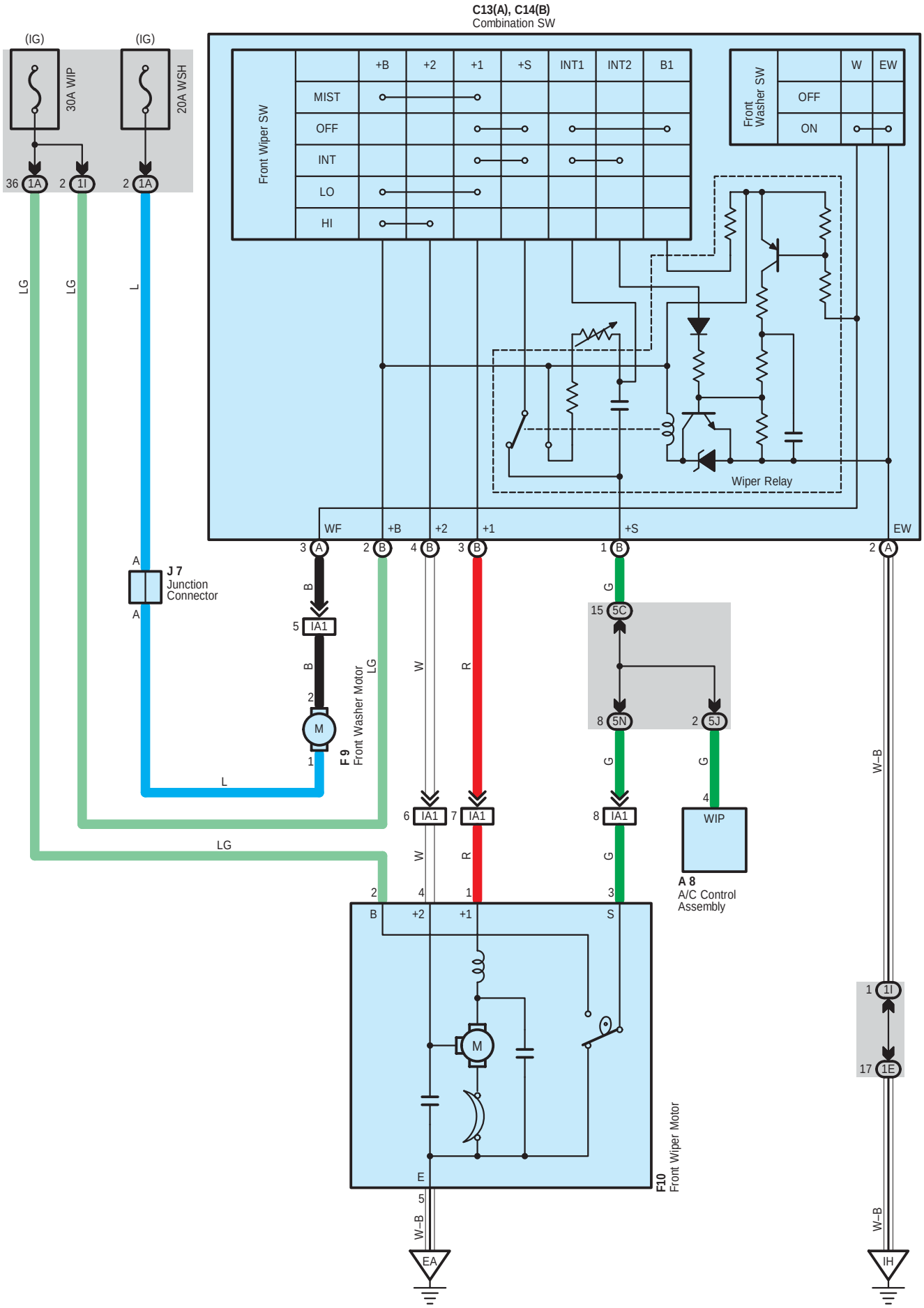
C13(A), C14(B)
Combination SW
(IG)
(IG)
30A WIP
20A WSH
36 1A
2 1I
2 1A
Front Wiper SW
MIST
OFF
INT
LO
HI
+B
+2
+1
+S
INT1
INT2
B1
Front Washer SW
W
EW
OFF
ON
Wiper Relay
WF
+B
+2
+1
+S
EW
LG
LG
L
J 7
Junction Connector
3 A
2 B
4 B
3 B
1 B
2 A
B
G
5 IA1
B
2
M
1
F 9
Front Washer Motor
LG
W
R
15 5C
8 5N
2 5J
G
G
L
6 IA1
7 IA1
8 IA1
4
WIP
A 8
A/C Control Assembly
W
R
G
LG
2
4
1
3
B
+2
+1
S
M
E
5
F10
Front Wiper Motor
W–B
EA
1 1I
17 1E
W–B
IH

System Outline

With the power SW pushed to IG ON position, the current flows to TERMINAL (B) 2 of the wiper and washer SW, and TERMINAL 2 of the front wiper motor through the WIP fuse.

1. Low Speed Position

With the wiper and washer SW turned to LO position, the current flows from TERMINAL (B) 2 of the wiper and washer SW to TERMINAL (B) 3 to TERMINAL 5 of the front wiper motor to TERMINAL 4 to GROUND, which runs the front wiper motor at low speed.

2. High Speed Position

With the wiper and washer SW turned to HI position, the current flows from TERMINAL (B) 2 of the wiper and washer SW to TERMINAL (B) 4 to TERMINAL 3 of the front wiper motor to TERMINAL 4 to GROUND, which runs the front wiper motor at high speed.

3. INT Position

With the wiper and washer SW turned to INT position, the wiper relay operates and current flows from TERMINAL (B) 2 of the wiper and washer SW to TERMINAL (A) 2 to GROUND. This activates the intermittent circuit and the current flows from TERMINAL (B) 2 of the wiper and washer SW to TERMINAL (B) 3 to TERMINAL 5 of the front wiper motor to TERMINAL 4 to GROUND and then the wiper operates. Intermittent operation is controlled by a condenser's charge and discharge function in the relay.

4. Washer Interlocking Operation

With the wiper and washer SW pulled to washer position (Washer SW ON position), the current flows from the WSH fuse to TERMINAL 1 of the front washer motor to TERMINAL 2 to TERMINAL (A) 3 of the wiper and washer SW to TERMINAL (A) 2 to GROUND and runs the washer motor and the window washer to spray. Simultaneously, current flows from the WIP fuse to TERMINAL (B) 2 of the wiper and washer SW to TERMINAL (B) 3 to TERMINAL 5 of the front wiper motor to TERMINAL 4 to GROUND, which activates the wiper.

○ : Parts Location

Code	See Page	Code	See Page	Code	See Page
A8	48	C14 B	49	F10	46
C13 A	49	F9	46	J7	50

⬭ : Junction Block and Wire Harness Connector

Code	See Page	Junction Block and Wire Harness (Connector Location)
1A	30	Engine Room Main Wire and Driver Side J/B (Lower Finish Panel)
1E	30	Instrument Panel Wire and Driver Side J/B (Lower Finish Panel)
1I		
5C	42	Instrument Panel Wire and Center Connector No.2 (Instrument Panel Brace RH)
5J		
5N		

▭ : Connector Joining Wire Harness and Wire Harness

Code	See Page	Joining Wire Harness and Wire Harness (Connector Location)
IA1	58	Engine Room Main Wire and Instrument Panel Wire (Upper Parts of Front Body Pillar LH)

▽ : Ground Points

Code	See Page	Ground Points Location
EA	56	Right Side of the Fender Apron
IH	58	Cowl Side Panel LH

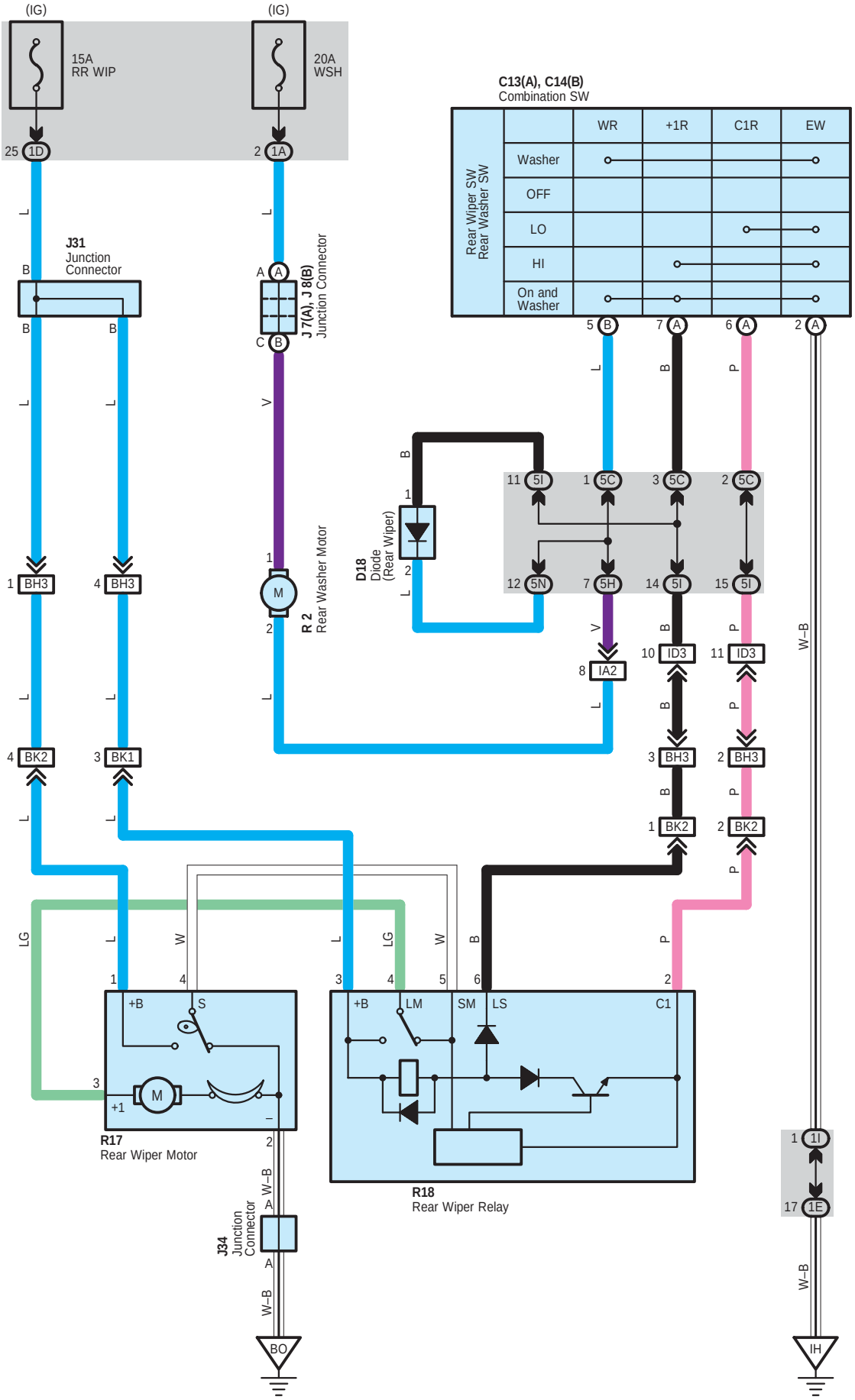
(IG)
15A
RR WIP
(IG)
20A
WSH
C13(A), C14(B)
Combination SW
Rear Wiper SW
Rear Washer SW
WR
+1R
C1R
EW
Washer
OFF
LO
HI
On and Washer
J31
Junction Connector
J 7(A), J 8(B)
Junction Connector
D18
Diode
(Rear Wiper)
R 2
Rear Washer Motor
R17
Rear Wiper Motor
R18
Rear Wiper Relay
J34
Junction Connector
BO
IH
W–B

System Outline

When the power SW is pushed to IG ON position, the current flows from the WSH fuse to rear washer motor TERMINAL 1, and the current flows from the RR WIP fuse to rear wiper relay TERMINAL 3, and to the rear wiper motor TERMINAL 1 respectively.

1. Rear Wiper Normal Operation

When the power SW is pushed to IG ON position, and the rear wiper and washer SW is turned to HI position, the current flows from the rear wiper relay TERMINAL 3 to TERMINAL 6 to the rear wiper and washer SW TERMINAL (A) 7 to TERMINAL (A) 2 to GROUND, and turns on the rear wiper relay. As a result, the current flows from the rear wiper relay TERMINAL 3 to TERMINAL 4 to the rear wiper motor TERMINAL 3 to TERMINAL 2 to GROUND, and operates the rear wiper.

2. Rear Wiper Intermittent Operation

When the power SW is pushed to IG ON position, and the rear wiper and washer SW is turned to LO position, the current flows from the rear wiper relay TERMINAL 3 to TERMINAL 2 to the rear wiper and washer SW TERMINAL (A) 6 to TERMINAL (A) 2 to GROUND, and the intermittent circuit in the rear wiper relay is controlled to operate the wiper intermittently.

3. Washer Operation

With the power SW is pushed to IG ON position, and the rear wiper and washer SW turned to ON position, when the washer is turned ON (to Wiper HI side), current to TERMINAL 1 of the washer motor flows to TERMINAL 2 of the motor to TERMINAL 5 of the rear wiper and washer SW to TERMINAL 2 to GROUND so that the washer motor rotates and the window washer emits water.

With the power SW is pushed to IG ON position, and the rear wiper and washer SW turned to OFF position, when the washer is turned ON (to Wiper OFF side), current flows as above so that the washer motor rotates and the window washer emits water as well as the wiper operates.

: Parts Location

Code	See Page	Code	See Page	Code	See Page
C13 A	49	J8 B	50	R17	54
C14 B	49	J31	53	R18	54
D18	49	J34	53		
J7 A	50	R2	47		

: Junction Block and Wire Harness Connector

Code	See Page	Junction Block and Wire Harness (Connector Location)
1A	30	Engine Room Main Wire and Driver Side J/B (Lower Finish Panel)
1D	30	Floor Wire and Driver Side J/B (Lower Finish Panel)
1E	30	Instrument Panel Wire and Driver Side J/B (Lower Finish Panel)
1I		
5C	42	Instrument Panel Wire and Center Connector No.2 (Instrument Panel Brace RH)
5H		
5I		
5N		

: Connector Joining Wire Harness and Wire Harness

Code	See Page	Joining Wire Harness and Wire Harness (Connector Location)
IA2	58	Engine Room Main Wire and Instrument Panel Wire (Upper Parts of Front Body Pillar LH)
ID3	58	Instrument Panel Wire and Floor Wire (Left Kick Panel)
BH3	61	Back Door No.1 Wire and Floor Wire (Rear Side of Roof Panel)
BK1	61	Back Door No.1 Wire and Back Door No.2 Wire (Rear Side of Roof Panel)
BK2		

: Ground Points

Code	See Page	Ground Points Location
IH	58	Cowl Side Panel LH
BO	60	Center of the Back Door Panel

Power Window

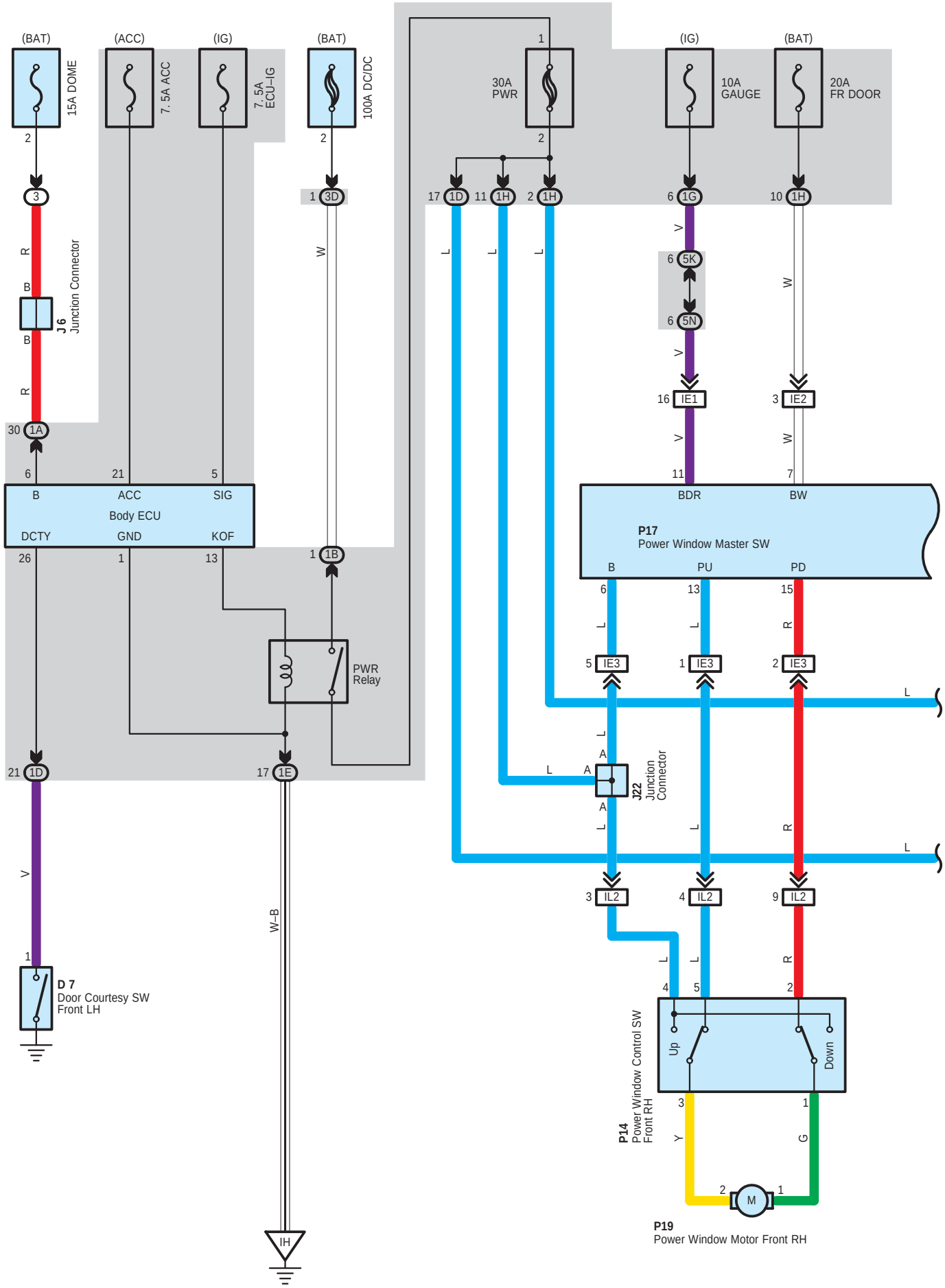

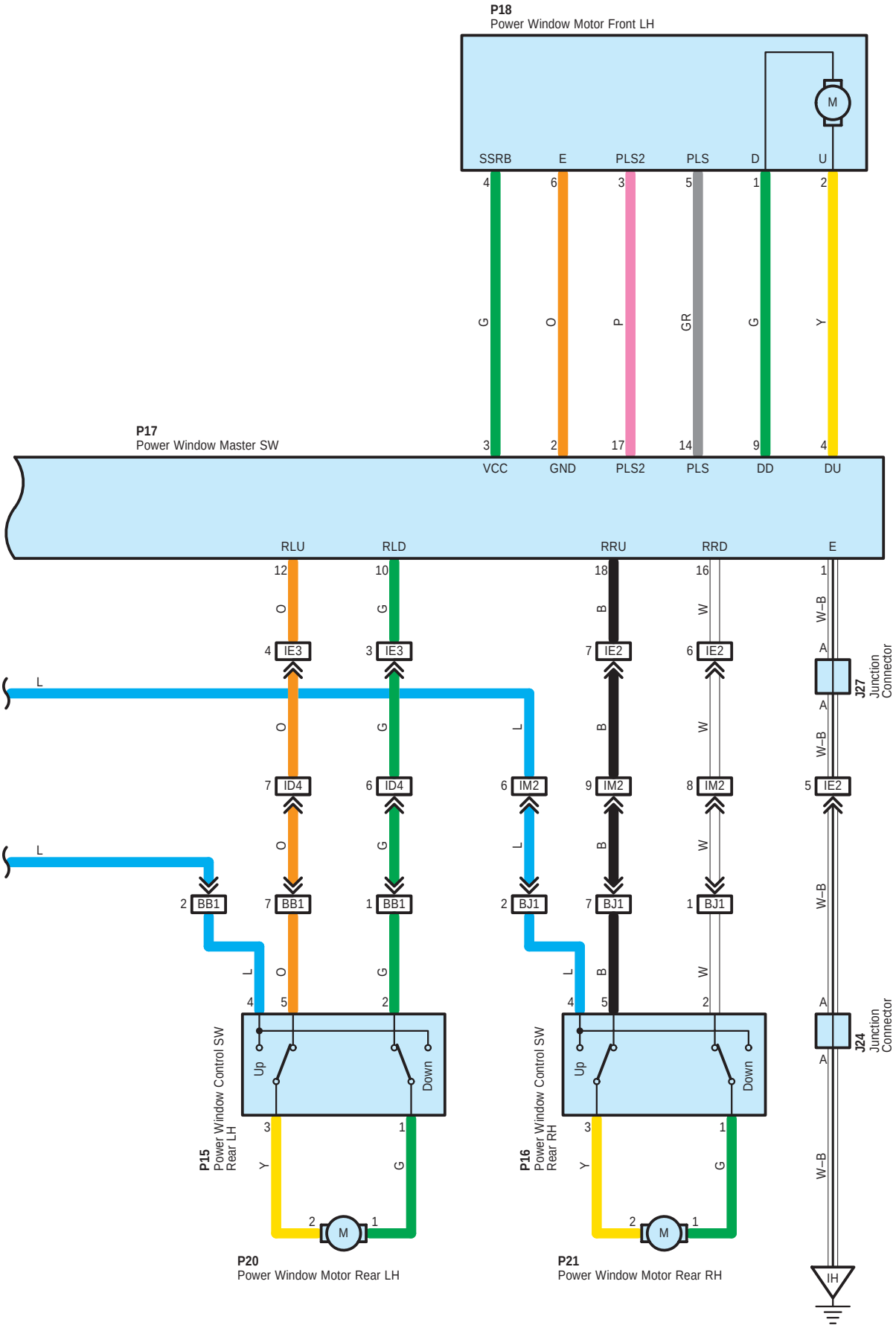
P18
Power Window Motor Front LH
SSRB
E
PLS2
PLS
D
U
M
4
6
3
5
1
2
G
O
P
GR
G
Y
P17
Power Window Master SW
3
2
17
14
9
4
VCC
GND
PLS2
PLS
DD
DU
RLU
RLD
RRU
RRD
E
12
10
18
16
1
O
G
B
W
W–B
4 IE3
3 IE3
7 IE2
6 IE2
A
J27
Junction
Connector
L
7 ID4
6 ID4
6 IM2
9 IM2
8 IM2
5 IE2
2 BB1
7 BB1
1 BB1
2 BJ1
7 BJ1
1 BJ1
4
5
2
Up
Down
P15
Power Window Control SW
Rear LH
P16
Power Window Control SW
Rear RH
3
1
Y
G
2
1
M
J24
Junction
Connector
P20
Power Window Motor Rear LH
P21
Power Window Motor Rear RH
IH

Power Window

System Outline

1. Manual Up and Down Function

This function operates the window to open or close while the power window switch is being pulled up or pushed down (Driver's SW should be pulled up and down halfway for manual operation.). The window stops as soon as the switch is released.

2. Driver's Door One–Touch Auto Up and Down Function

"The driver's door one–touch auto up and down function" enables the window of front doors to be fully opened or closed with a touch of the power window switch.

3. Jam Protection Function (Driver's Door)

The jam protection function automatically stops the power window and moves it downward if a foreign object gets jammed in the course of the window during one–touch auto–up operation.

4. Remote Control Function

The up and down operation of the front passenger door windows and the rear door windows can be controlled by operating the power window master switch.

5. Key–Off Operation Function

For about 43 seconds after pushing OFF the power SW or opening the driver's side door, this function enables the power window master switch to operate all the door windows and enables the switch of each passenger's door to operate each window manually. Please note that the function becomes unavailable if the driver's side door is shut. (The one–touch auto up and down operation of the driver's side door is included as well)

* When the battery terminal or fuse is disconnected, the glass position of all door windows have to be reset to the initial positions, one by one, with the power window control switch by following the procedure below:

A) Reconnect the battery terminal or fuse.

B) Push the power SW to IG ON position

C) Lower the window of each door halfway or more with the power window switch.

D) Then close the window fully with the power window switch.
Do not release the switch for at least one second after the window is fully closed.

○ : Parts Location

Code	See Page	Code	See Page	Code	See Page
D7	52	P14	54	P19	54
J6	50	P15	54	P20	54
J22	50	P16	54	P21	54
J24	50	P17	54		
J27	53	P18	54		

▭ : Relay Blocks

Code	See Page	Relay Blocks (Relay Block Location)
3	22	Engine Room R/B (Engine Compartment Left)

▭ : Junction Block and Wire Harness Connector

Code	See Page	Junction Block and Wire Harness (Connector Location)
1A	30	Engine Room Main Wire and Driver Side J/B (Lower Finish Panel)
1B		
1D	30	Floor Wire and Driver Side J/B (Lower Finish Panel)
1E	30	Instrument Panel Wire and Driver Side J/B (Lower Finish Panel)
1G		
1H		
3D	23	Engine Room Main Wire and Engine Room J/B (Engine Compartment Left)
5K	42	Instrument Panel Wire and Center Connector No.2 (Instrument Panel Brace RH)
5N		

: **Connector Joining Wire Harness and Wire Harness**

Code	See Page	Joining Wire Harness and Wire Harness (Connector Location)
ID4	58	Instrument Panel Wire and Floor Wire (Left Kick Panel)
IE1	58	Front Door LH Wire and Instrument Panel Wire (Left Kick Panel)
IE2		
IE3		
IL2	59	Front Door RH Wire and Instrument Panel Wire (Right Kick Panel)
IM2	59	Instrument Panel Wire and Floor No.2 Wire (Right Kick Panel)
BB1	60	Rear Door No.2 Wire and Floor Wire (Left Center Pillar)
BJ1	61	Rear Door No.1 Wire and Floor No.2 Wire (Right Center Pillar)

: **Ground Points**

Code	See Page	Ground Points Location
IH	58	Cowl Side Panel LH

Door Lock Control

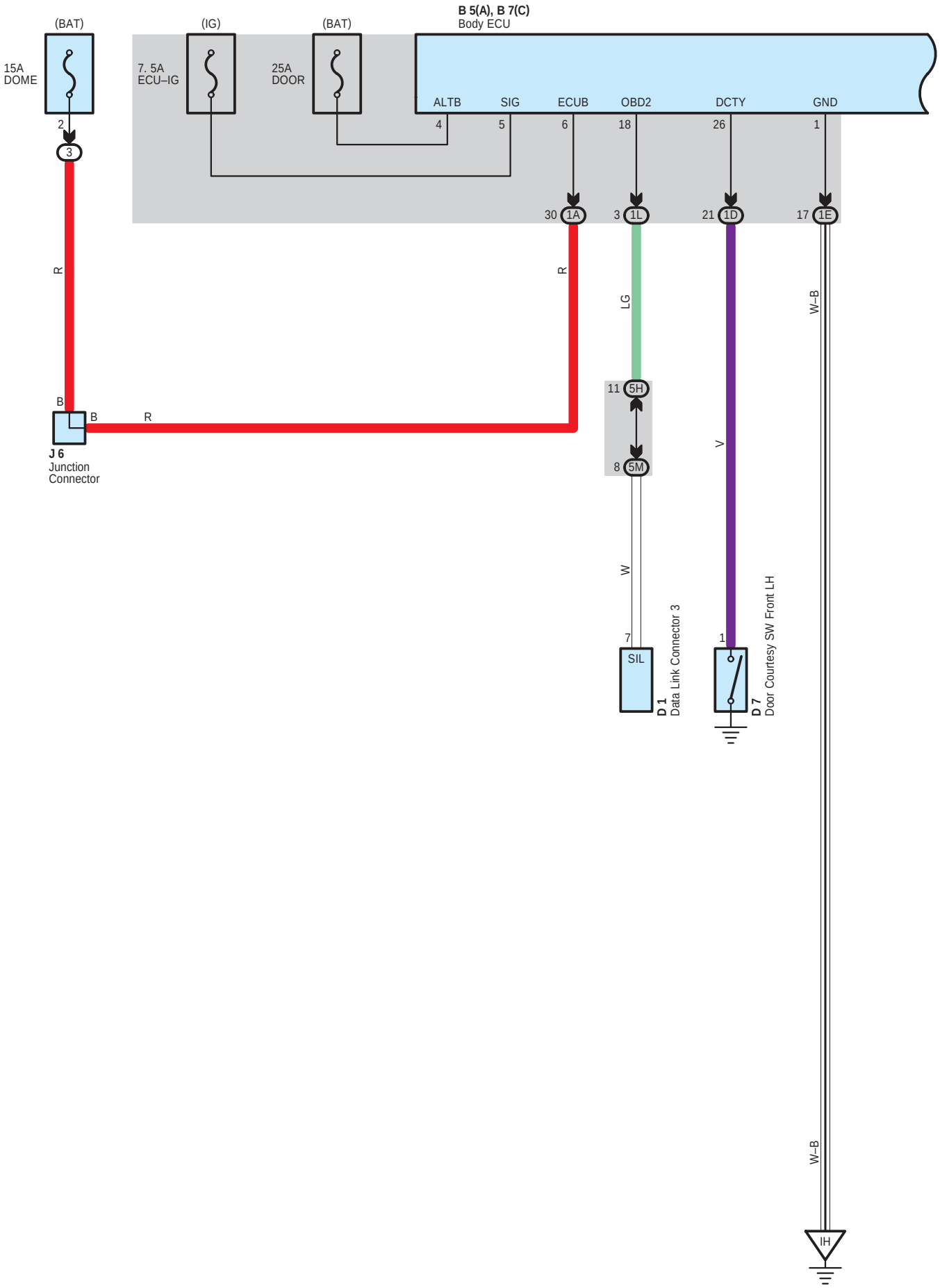

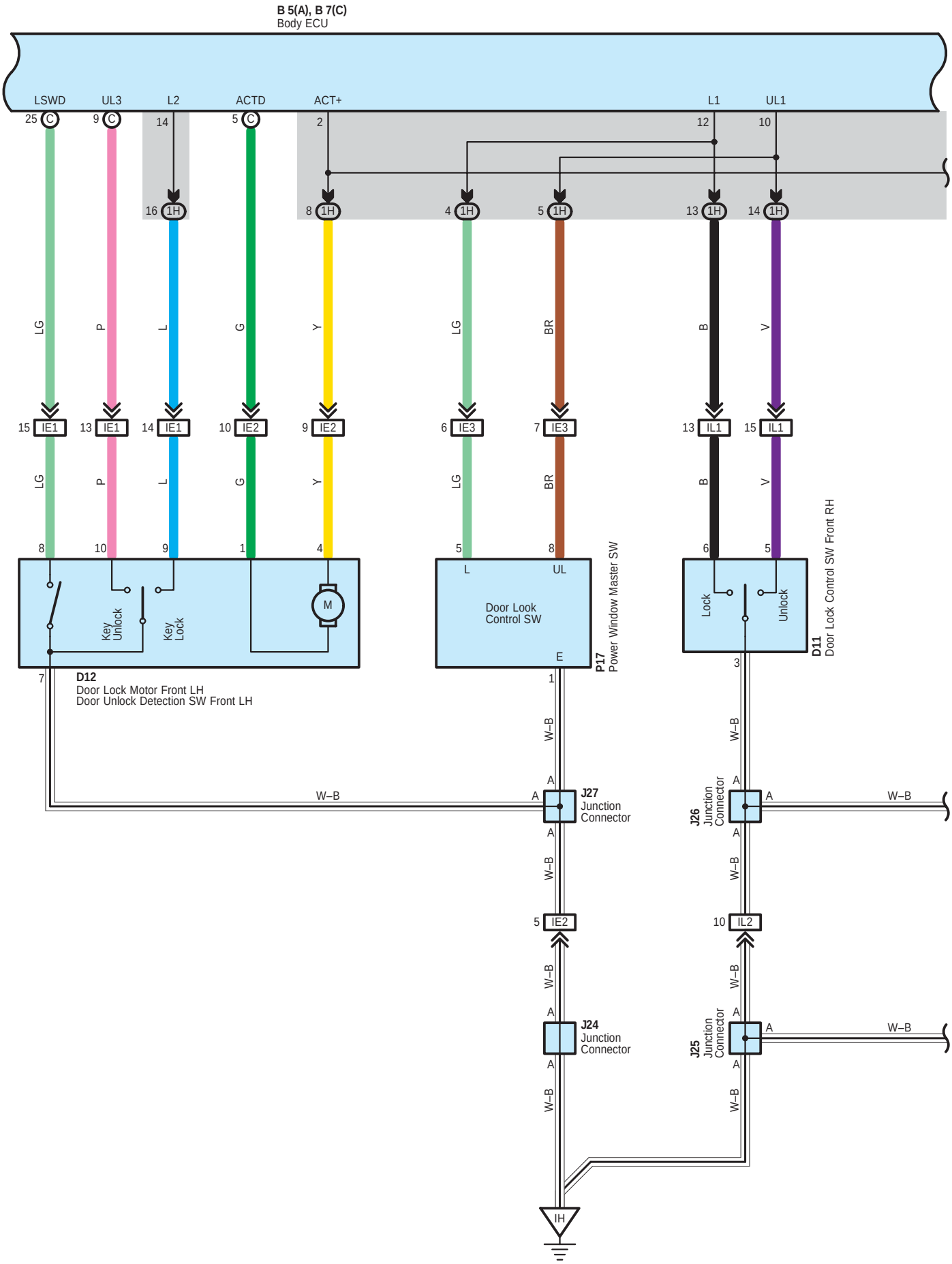
B 5(A), B 7(C)
Body ECU
LSWD
UL3
L2
ACTD
ACT+
L1
UL1
25 C
9 C
14
5 C
2
12
10
16 1H
8 1H
4 1H
5 1H
13 1H
14 1H
LG
P
L
G
Y
LG
BR
B
V
15 IE1
13 IE1
14 IE1
10 IE2
9 IE2
6 IE3
7 IE3
13 IL1
15 IL1
LG
P
L
G
Y
LG
BR
B
V
8
10
9
1
4
5
8
6
5
Key Unlock
Key Lock
M
L
UL
Door Look Control SW
E
Lock
Unlock
7
D12
Door Lock Motor Front LH
Door Unlock Detection SW Front LH
P17
Power Window Master SW
D11
Door Lock Control SW Front RH
1
3
W–B
W–B
A
A
W–B
A
J27
Junction Connector
A
J26
Junction Connector
A
W–B
A
W–B
W–B
5 IE2
10 IL2
W–B
W–B
A
J24
Junction Connector
A
J25
Junction Connector
A
A
W–B
A
W–B
W–B
IH

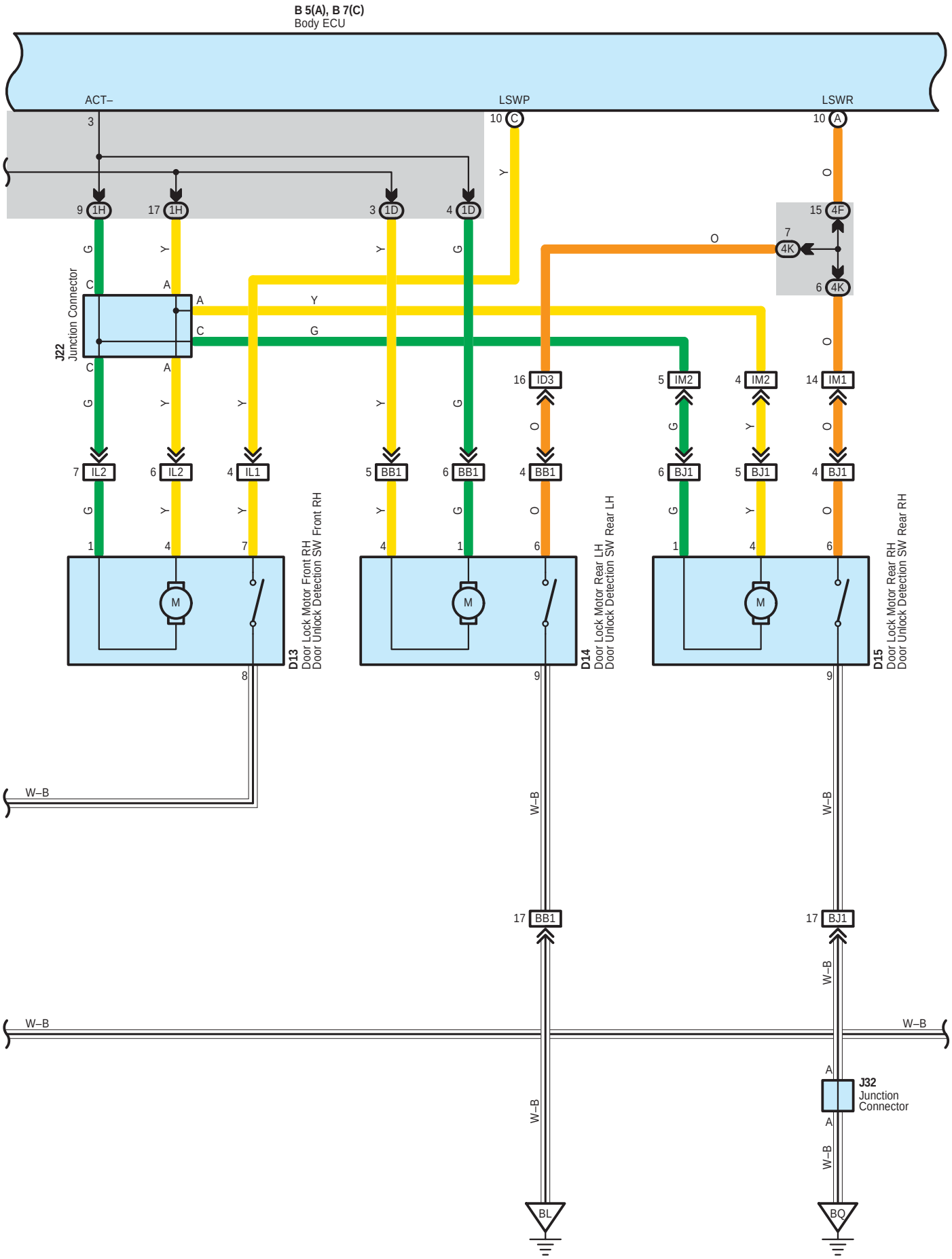
B 5(A), B 7(C)
Body ECU
ACT–
LSWP
LSWR
J22
Junction Connector
D13
Door Lock Motor Front RH
Door Unlock Detection SW Front RH
D14
Door Lock Motor Rear LH
Door Unlock Detection SW Rear LH
D15
Door Lock Motor Rear RH
Door Unlock Detection SW Rear RH
J32
Junction Connector
W–B
BL
BQ

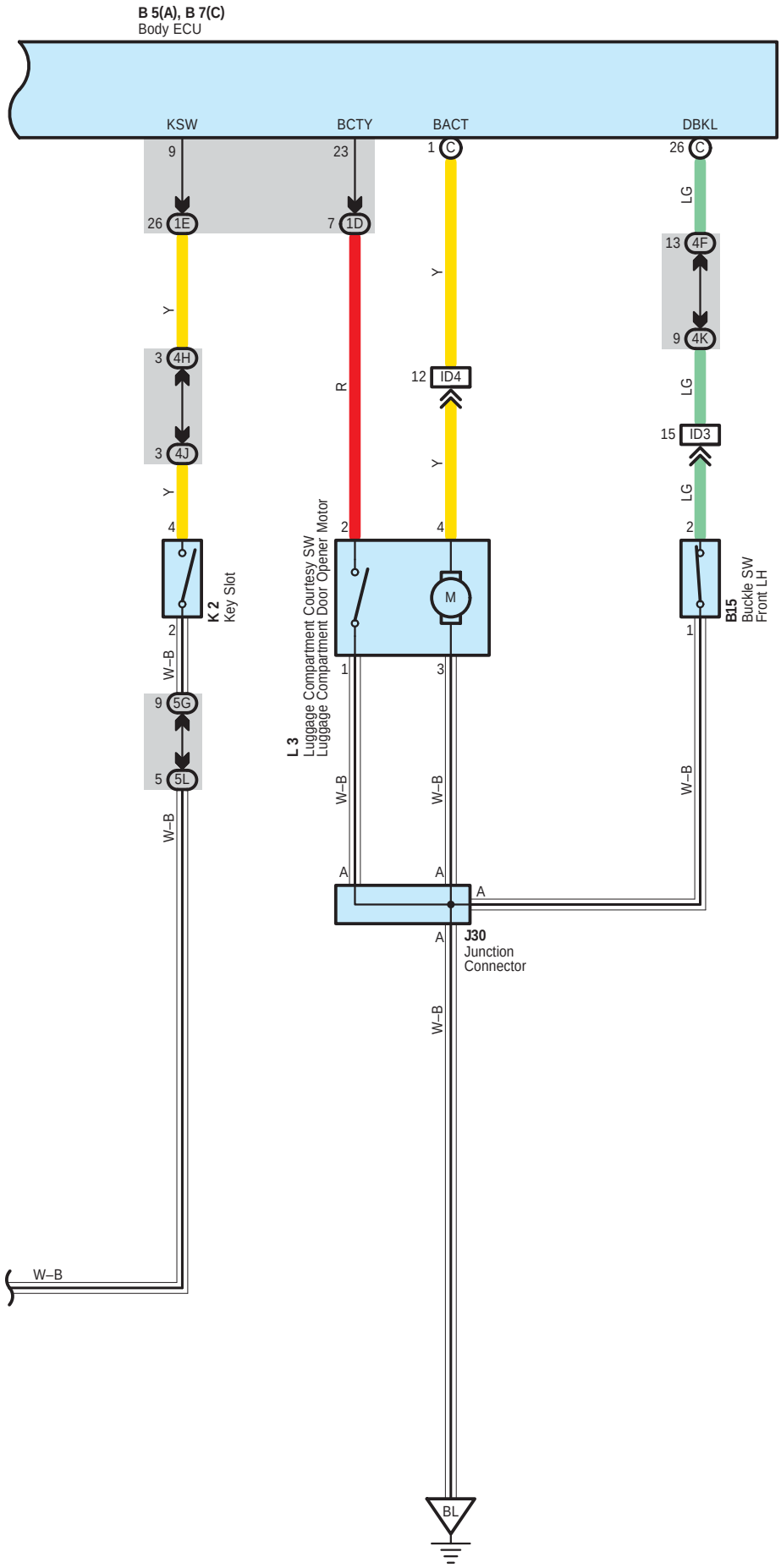
B 5(A), B 7(C)
Body ECU
KSW
BCTY
BACT
DBKL
9
23
1
C
26
C
26
1E
7
1D
LG
13
4F
Y
9
4K
3
4H
12
ID4
R
LG
15
ID3
3
4J
Y
Y
LG
4
2
4
2
K 2
Key Slot
L 3
Luggage Compartment Courtesy SW
Luggage Compartment Door Opener Motor
M
B15
Buckle SW
Front LH
2
1
3
1
W–B
W–B
W–B
9
5G
5
5L
A
A
A
A
J30
Junction
Connector
W–B
W–B
BL

Door Lock Control

System Outline

The door lock control is a system controlled by various signals input into the body ECU through communication control of the body ECU etc.

1. Manual Unlock Operation

When the door lock control SW of the driver's or passenger's side door is pushed to UNLOCK, the door unlocks.

2. Manual Lock Operation

When the door lock control SW of the driver's or passenger's side door is pushed to LOCK, the door locks.

3. Door Key Unlock Operation

* Unlock operation from driver's side door
  When the driver's side door is unlocked once using the mechanical key, only the driver's side door unlocks. If this operation is repeated within 3 seconds, all the other doors also unlock.

4. Ignition Key Reminder Operation

Under condition that the electrical key remains inserted in the key slot and driver's side door is open, locking operation with door knob of driver's door is not effective but automatically unlocks the door. When the door is locked with the manual door lock SW of driver's door or door key SW of driver's door, the door locks once but right after that, the door unlocks automatically.

○ : Parts Location

Code	See Page	Code	See Page	Code	See Page
B5 A	48	D13	52	J26	53
B7 C	48	D14	52	J27	53
B15	52	D15	52	J30	53
D1	49	J6	50	J32	53
D7	52	J22	50	K2	50
D11	52	J24	50	L3	53
D12	52	J25	50	P17	54

▭ : Relay Blocks

Code	See Page	Relay Blocks (Relay Block Location)
3	22	Engine Room R/B (Engine Compartment Left)

▭ : Junction Block and Wire Harness Connector

Code	See Page	Junction Block and Wire Harness (Connector Location)
1A	30	Engine Room Main Wire and Driver Side J/B (Lower Finish Panel)
1D	30	Floor Wire and Driver Side J/B (Lower Finish Panel)
1E	30	Instrument Panel Wire and Driver Side J/B (Lower Finish Panel)
1H		
1L	31	
4F	38	Instrument Panel Wire and Center Connector No.1 (Behind the Combination Meter)
4H		
4J		
4K		
5G	42	Instrument Panel Wire and Center Connector No.2 (Instrument Panel Brace RH)
5H		
5L		
5M		

: **Connector Joining Wire Harness and Wire Harness**

Code	See Page	Joining Wire Harness and Wire Harness (Connector Location)
ID3	58	Instrument Panel Wire and Floor Wire (Left Kick Panel)
ID4		
IE1	58	Front Door LH Wire and Instrument Panel Wire (Left Kick Panel)
IE2		
IE3		
IL1	59	Front Door RH Wire and Instrument Panel Wire (Right Kick Panel)
IL2		
IM1	59	Instrument Panel Wire and Floor No.2 Wire (Right Kick Panel)
IM2		
BB1	60	Rear Door No.2 Wire and Floor Wire (Left Center Pillar)
BJ1	61	Rear Door No.1 Wire and Floor No.2 Wire (Right Center Pillar)

: **Ground Points**

Code	See Page	Ground Points Location
IH	58	Cowl Side Panel LH
BL	60	Rear Side of Left Quarter Panel
BQ	60	Rear Side of Right Quarter Panel

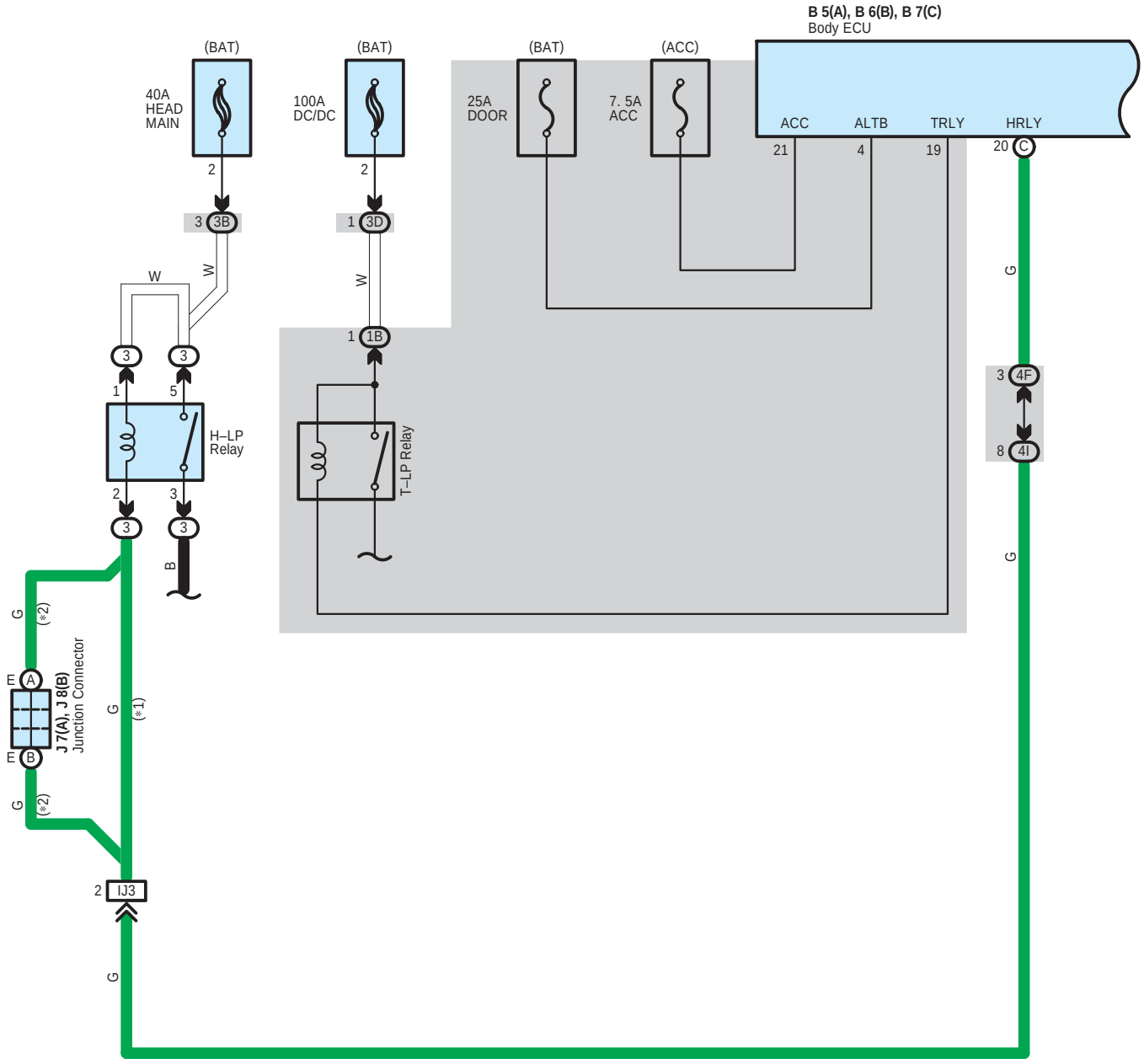

∗ 1 : w/ Daytime Running Light
∗ 2 : w/o Daytime Running Light

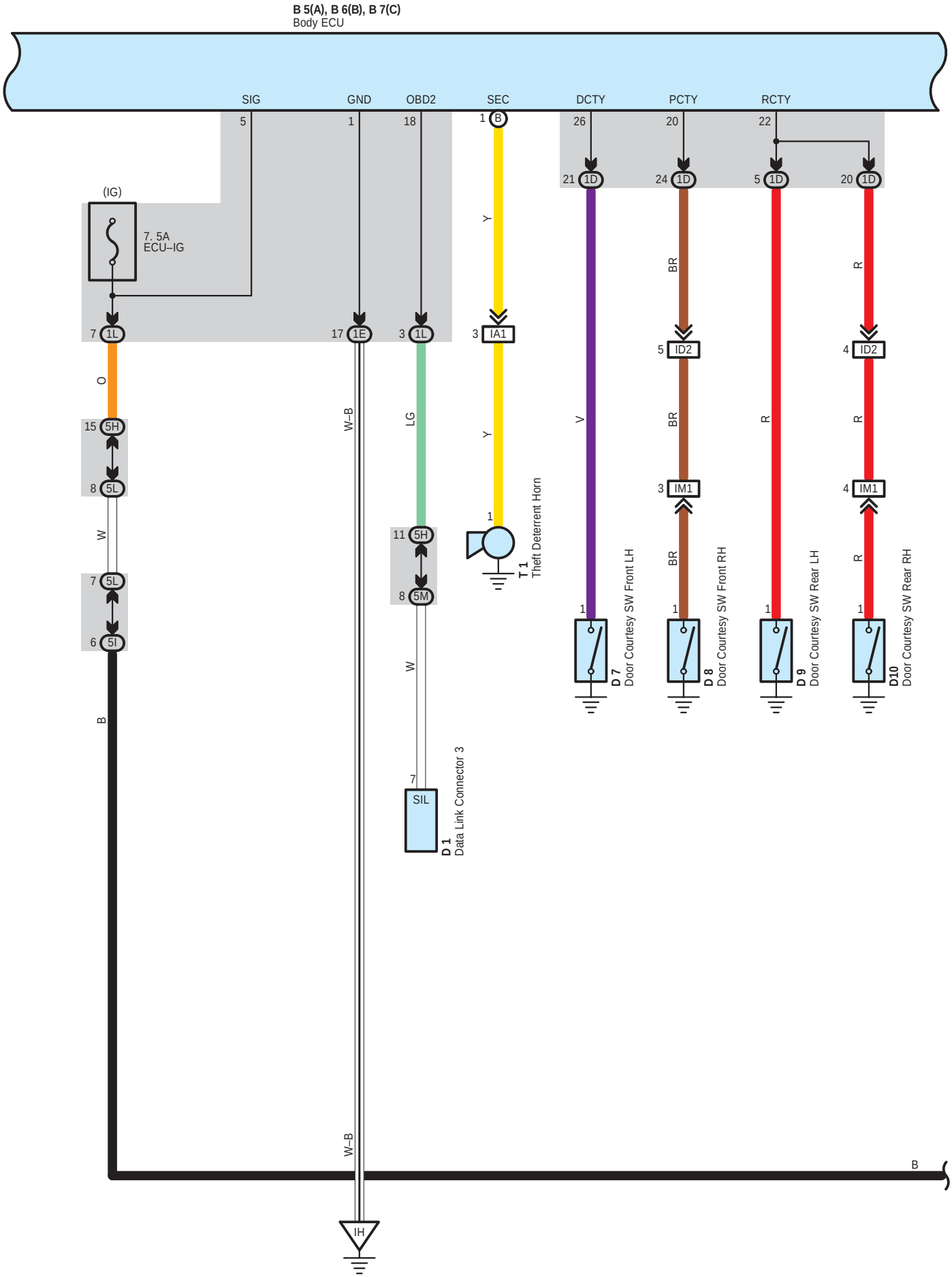
B 5(A), B 6(B), B 7(C)
Body ECU
SIG
GND
OBD2
SEC
DCTY
PCTY
RCTY
5
1
18
1 B
26
20
22
21 1D
24 1D
5 1D
20 1D
(IG)
7. 5A
ECU–IG
7 1L
17 1E
3 1L
3 IA1
5 ID2
4 ID2
15 5H
8 5L
11 5H
8 5M
3 IM1
4 IM1
7 5L
6 5I
7
SIL
1
O
W
B
W–B
LG
Y
V
BR
R
T 1
Theft Deterrent Horn
D 7
Door Courtesy SW Front LH
D 8
Door Courtesy SW Front RH
D 9
Door Courtesy SW Rear LH
D10
Door Courtesy SW Rear RH
D 1
Data Link Connector 3
IH

Smart Key System and Wireless Door Lock Control

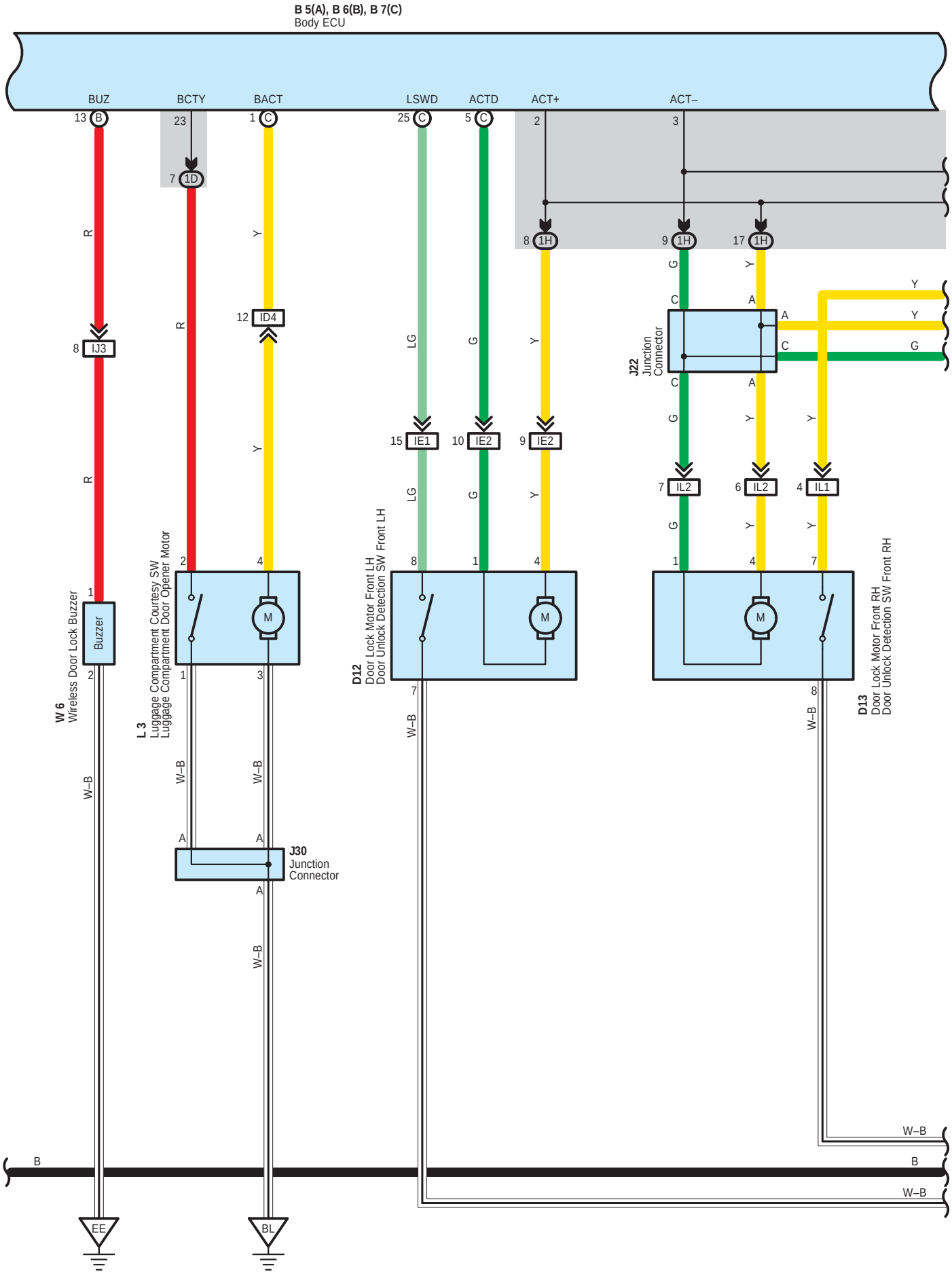

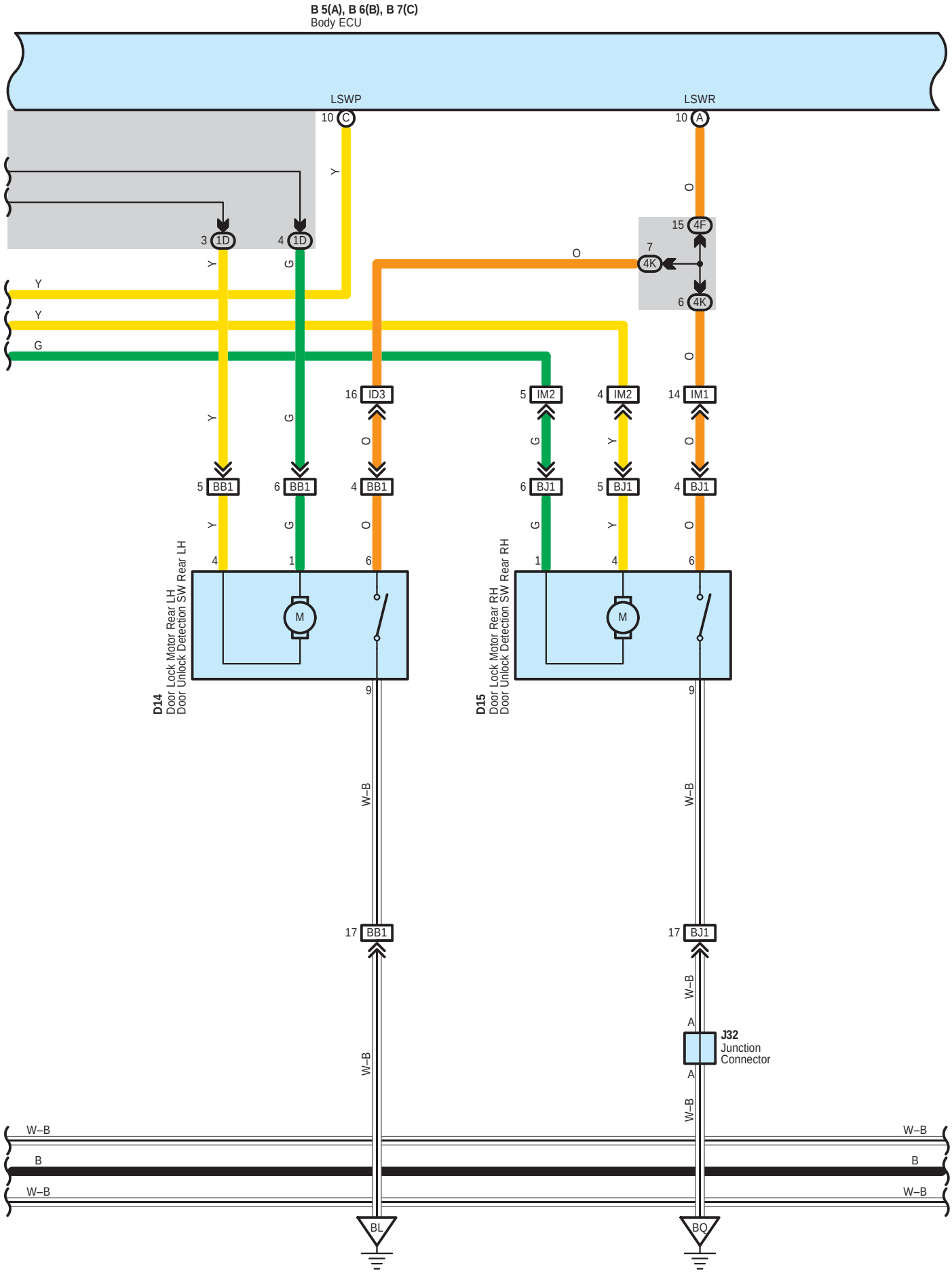
B 5(A), B 6(B), B 7(C)
Body ECU
LSWP
LSWR
10 C
10 A
3 1D
4 1D
15 4F
7 4K
6 4K
16 ID3
5 IM2
4 IM2
14 IM1
5 BB1
6 BB1
4 BB1
6 BJ1
5 BJ1
4 BJ1
D14
Door Lock Motor Rear LH
Door Unlock Detection SW Rear LH
D15
Door Lock Motor Rear RH
Door Unlock Detection SW Rear RH
M
17 BB1
17 BJ1
J32
Junction
Connector
W–B
B
BL
BQ

Smart Key System and Wireless Door Lock Control

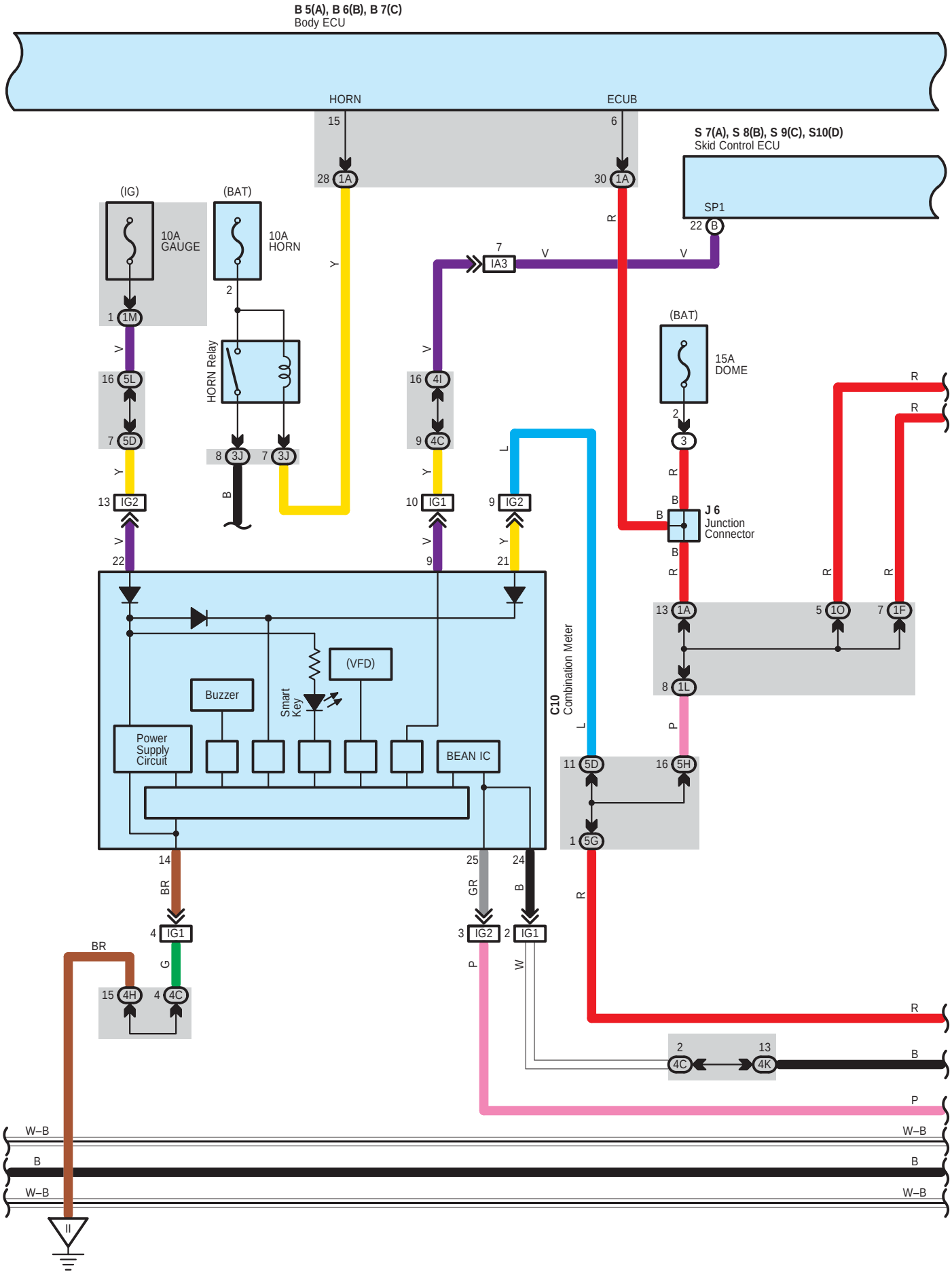

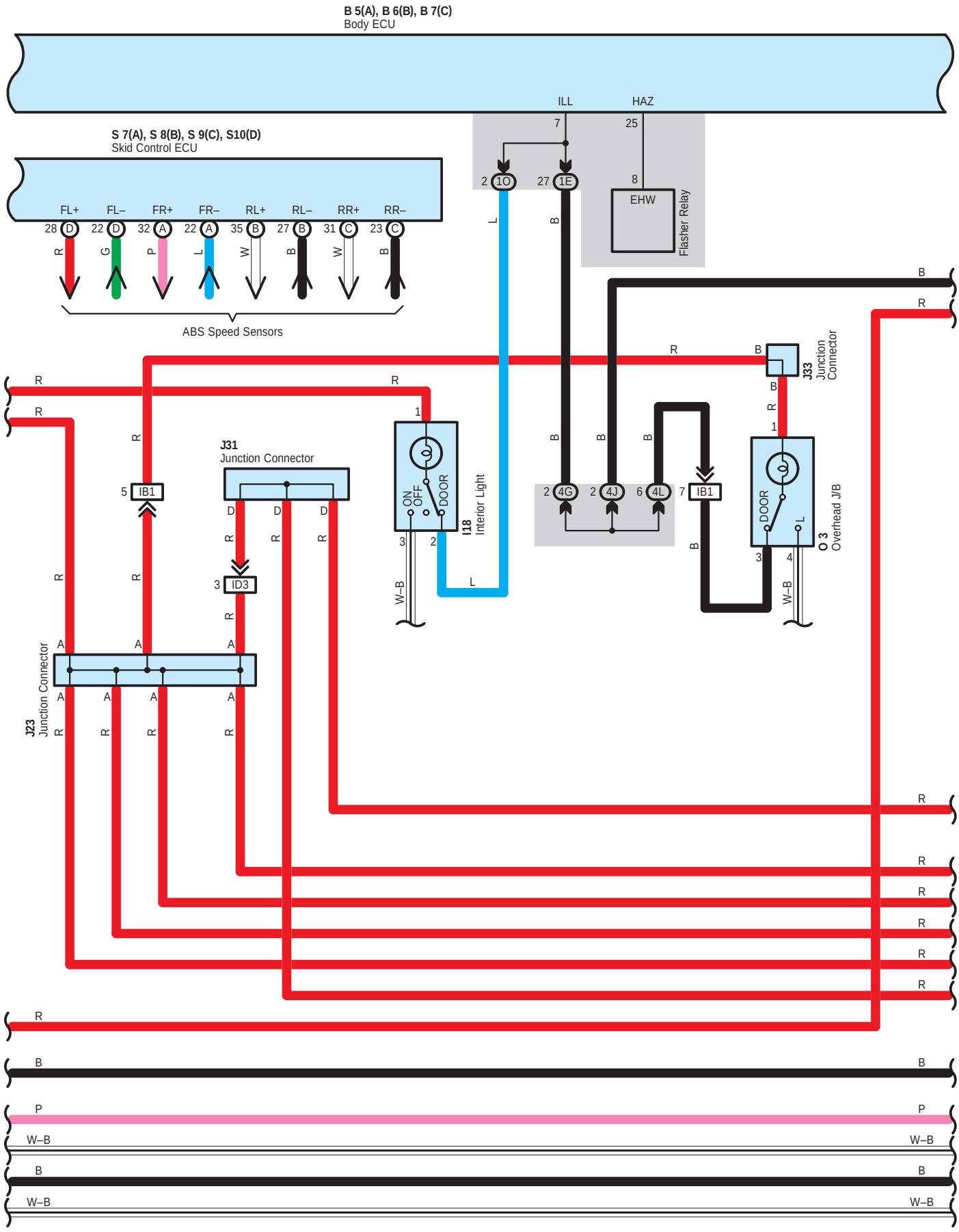
B 5(A), B 6(B), B 7(C)
Body ECU
S 7(A), S 8(B), S 9(C), S10(D)
Skid Control ECU
FL+
FL–
FR+
FR–
RL+
RL–
RR+
RR–
ABS Speed Sensors
ILL
HAZ
EHW
Flasher Relay
J31
Junction Connector
J33
Junction Connector
J23
Junction Connector
I18
Interior Light
O 3
Overhead J/B
IB1
ID3
ON
OFF
DOOR

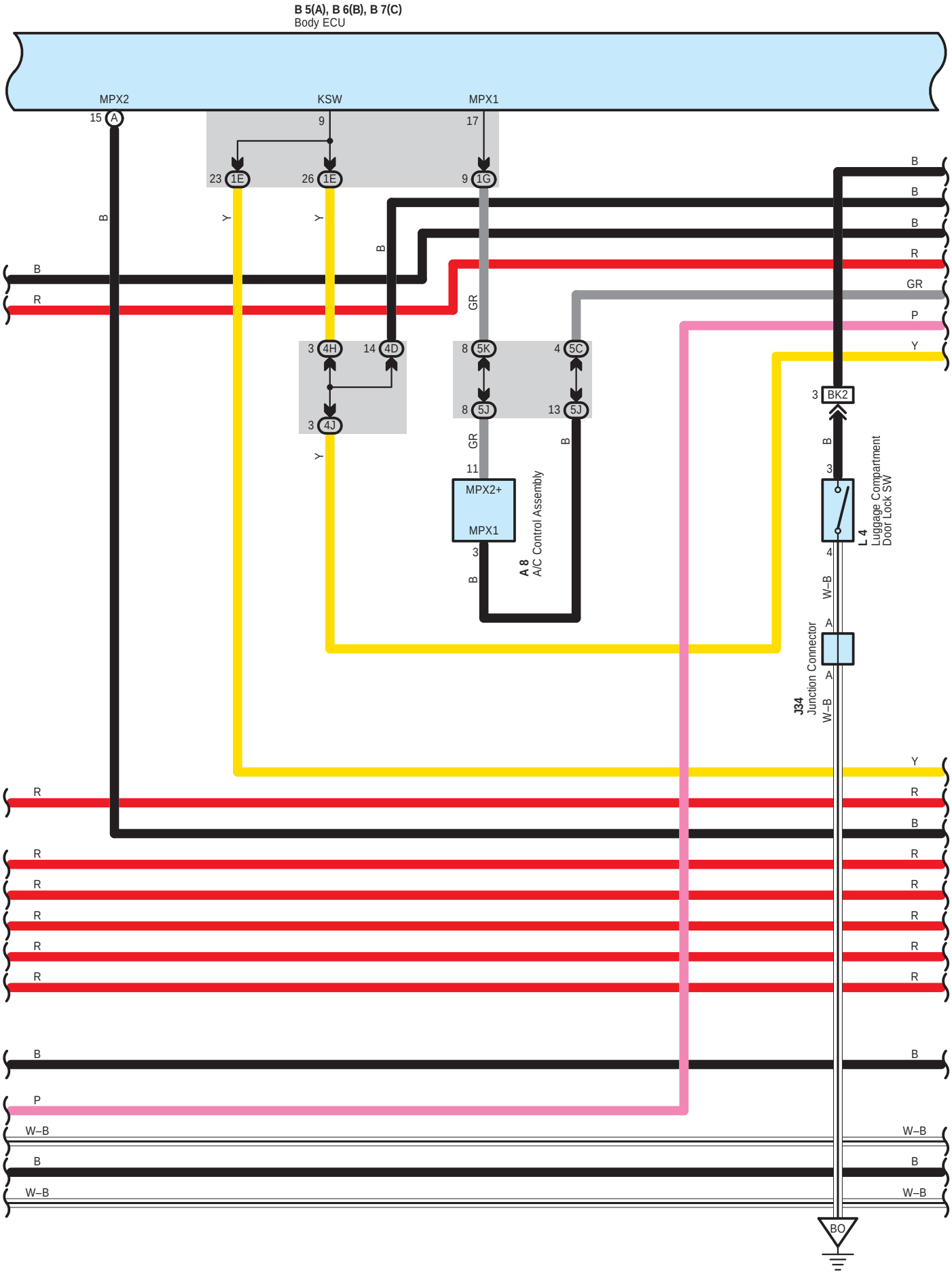
B 5(A), B 6(B), B 7(C)
Body ECU
MPX2
KSW
MPX1
15 A
9
17
23 1E
26 1E
9 1G
3 4H
14 4D
3 4J
8 5K
4 5C
8 5J
13 5J
11
MPX2+
MPX1
3
A 8
A/C Control Assembly
3 BK2
3
4
L 4
Luggage Compartment
Door Lock SW
W–B
A
A
J34
Junction Connector
W–B
BO
B
R
GR
P
Y
W–B

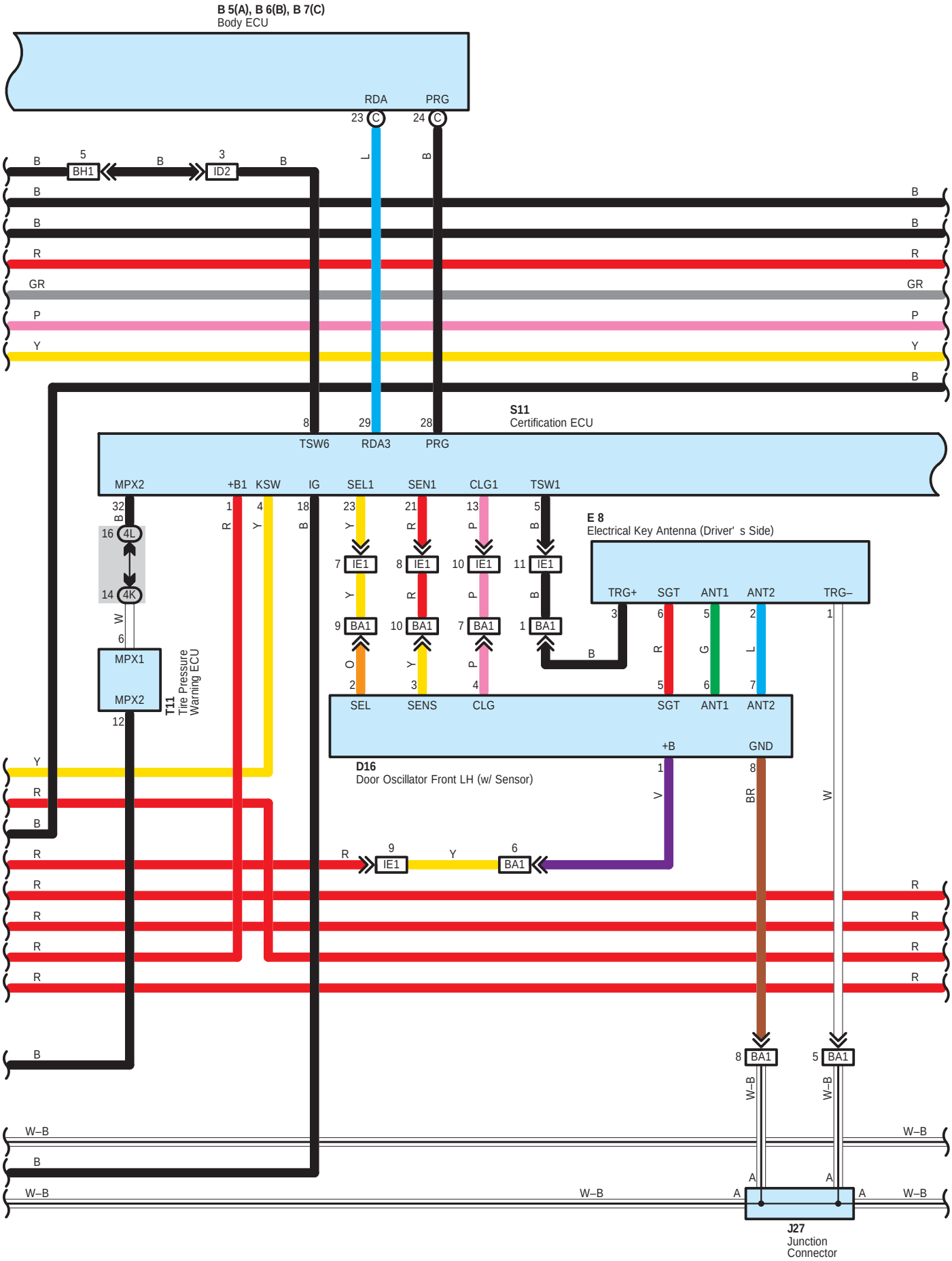
B 5(A), B 6(B), B 7(C)
Body ECU
RDA
PRG
23
24
BH1
ID2
S11
Certification ECU
TSW6
RDA3
PRG
MPX2
+B1
KSW
IG
SEL1
SEN1
CLG1
TSW1
E 8
Electrical Key Antenna (Driver' s Side)
TRG+
SGT
ANT1
ANT2
TRG–
4L
4K
MPX1
MPX2
T11
Tire Pressure Warning ECU
IE1
BA1
SEL
SENS
CLG
D16
Door Oscillator Front LH (w/ Sensor)
+B
GND
J27
Junction Connector

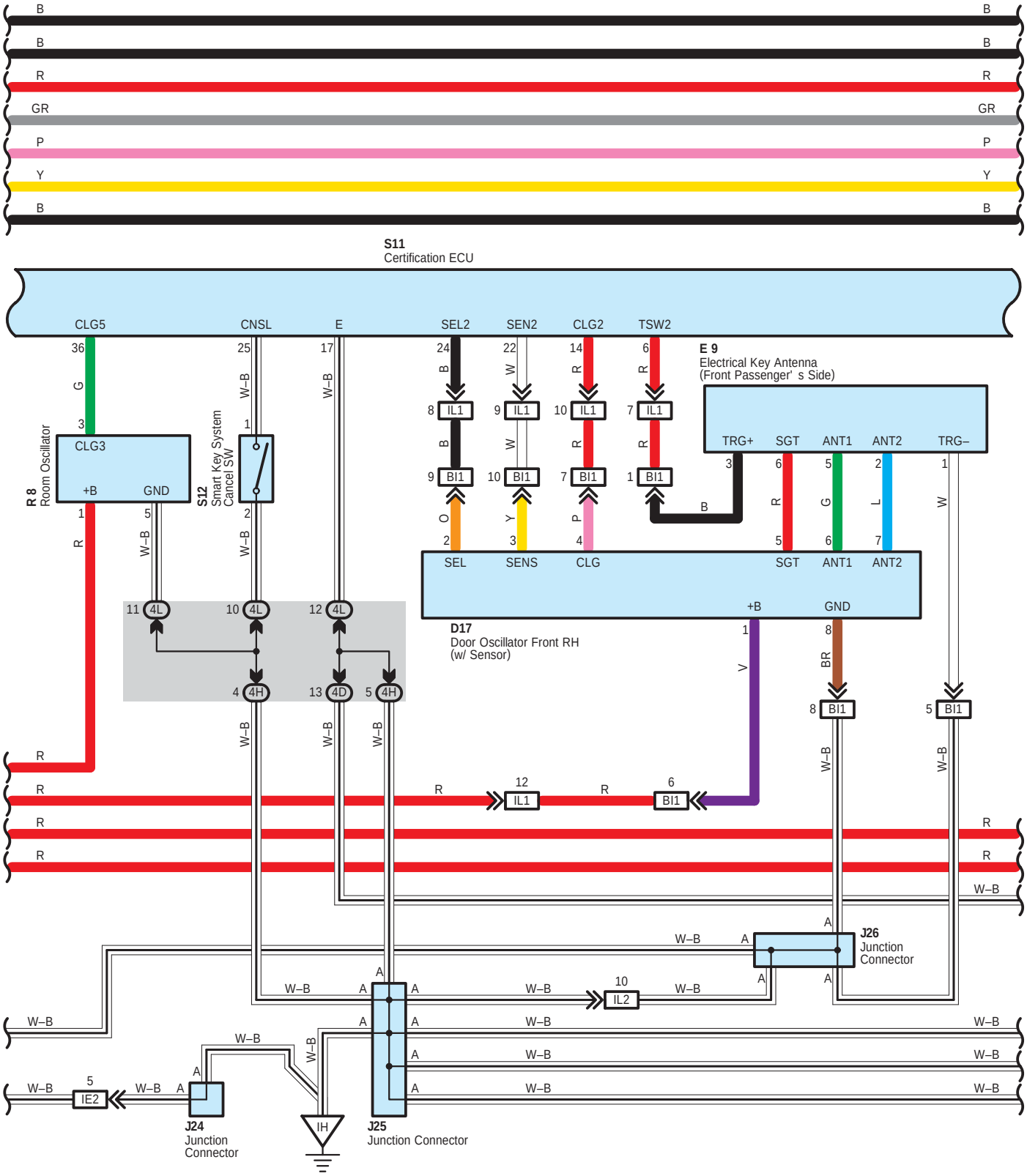
S11
Certification ECU
CLG5
CNSL
E
SEL2
SEN2
CLG2
TSW2
E 9
Electrical Key Antenna
(Front Passenger' s Side)
TRG+
SGT
ANT1
ANT2
TRG–
R 8
Room Oscillator
CLG3
+B
GND
S12
Smart Key System
Cancel SW
SEL
SENS
CLG
D17
Door Oscillator Front RH
(w/ Sensor)
J26
Junction
Connector
J24
Junction
Connector
J25
Junction Connector
IH
IE2

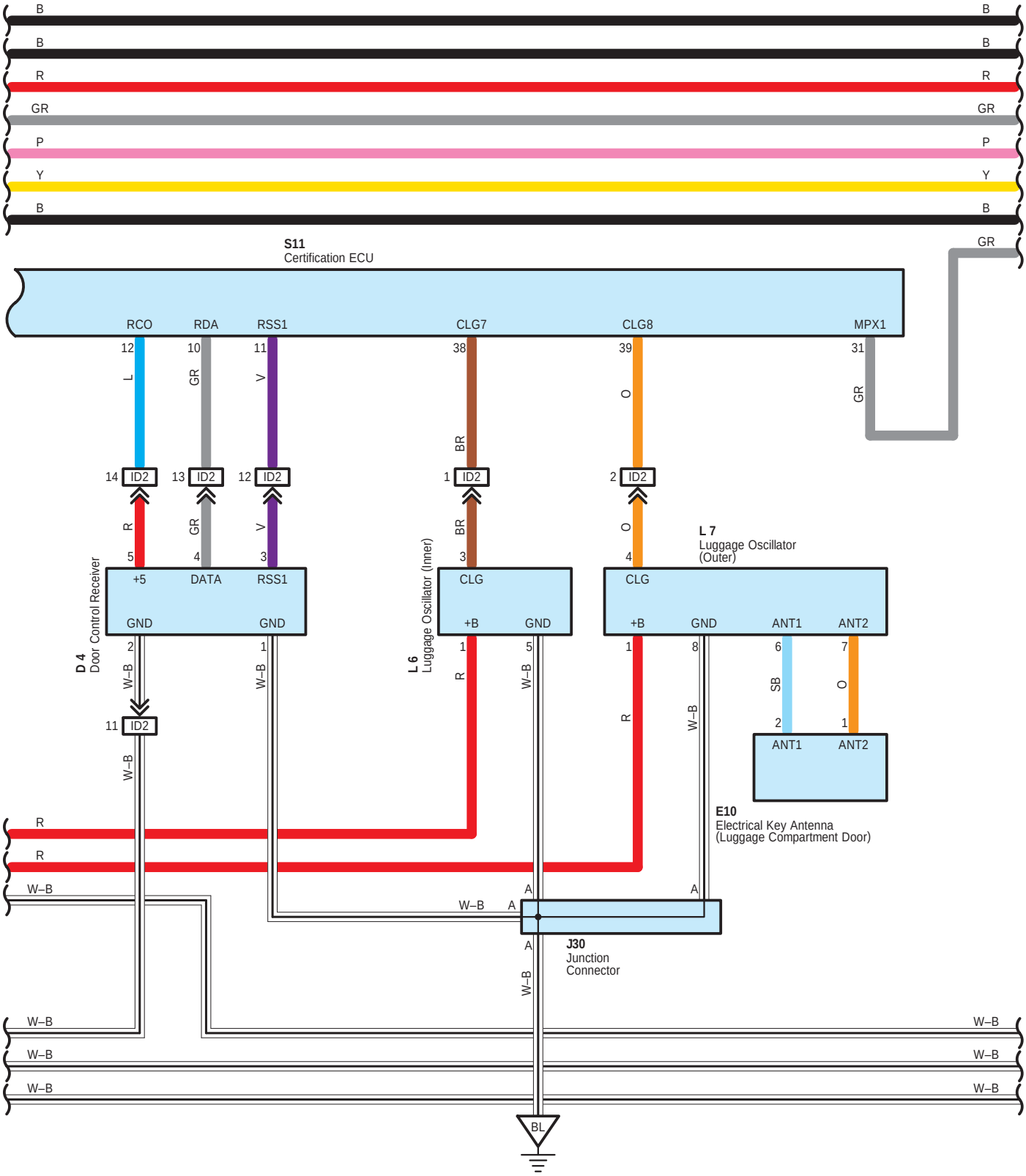
B
B
R
GR
P
Y
B
S11
Certification ECU
RCO
RDA
RSS1
CLG7
CLG8
MPX1
12
10
11
38
39
31
L
GR
V
BR
O
GR
14 ID2
13 ID2
12 ID2
1 ID2
2 ID2
R
GR
V
BR
O
5
4
3
3
4
D 4
Door Control Receiver
+5
DATA
RSS1
GND
GND
L 6
Luggage Oscillator (Inner)
CLG
+B
GND
L 7
Luggage Oscillator
(Outer)
CLG
+B
GND
ANT1
ANT2
2
1
1
5
1
8
6
7
W–B
W–B
R
W–B
SB
O
11 ID2
W–B
2
1
ANT1
ANT2
E10
Electrical Key Antenna
(Luggage Compartment Door)
R
R
W–B
W–B
A
A
A
J30
Junction
Connector
W–B
W–B
W–B
W–B
W–B
W–B
BL

Smart Key System and Wireless Door Lock Control

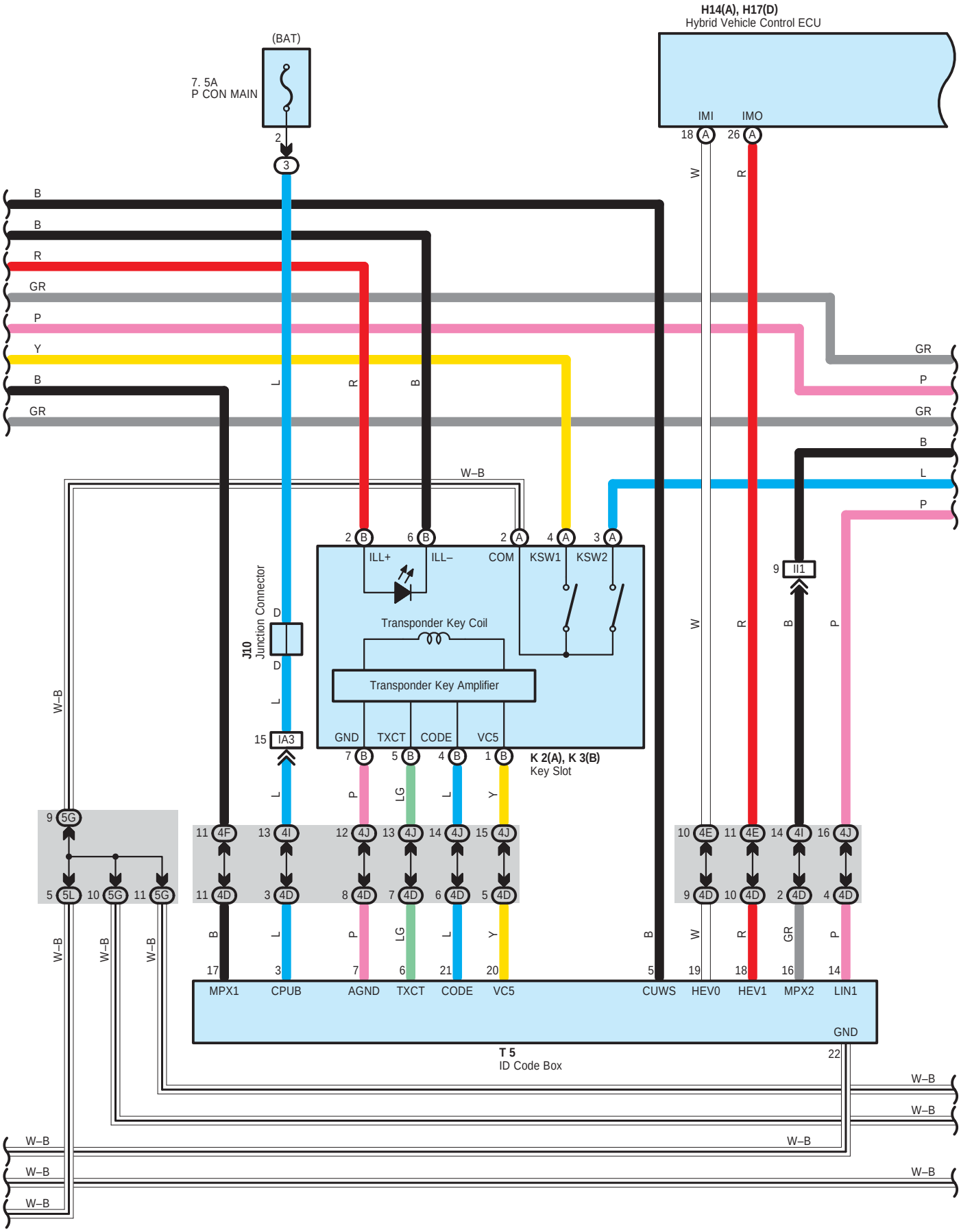

H14(A), H17(D)
Hybrid Vehicle Control ECU

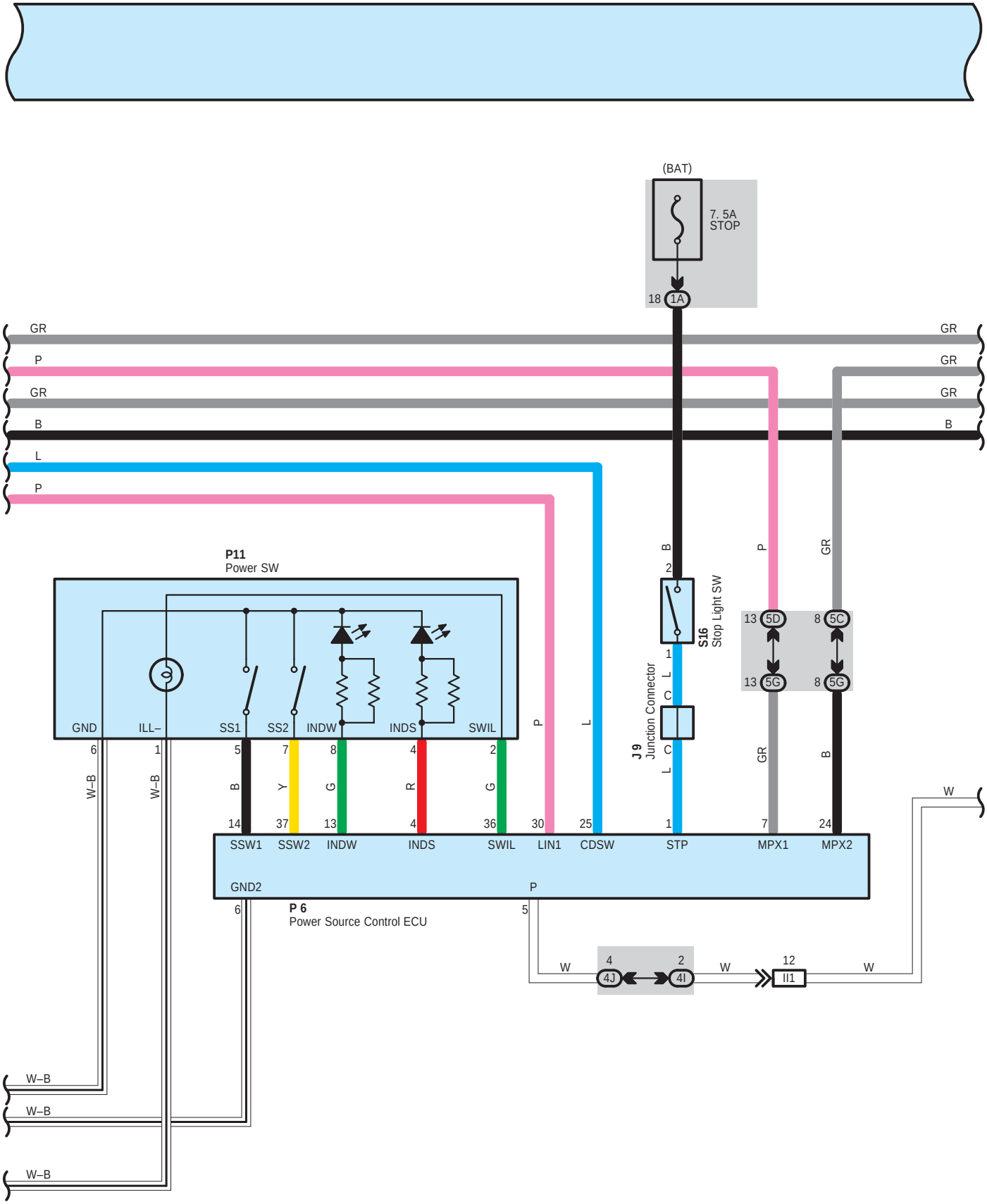

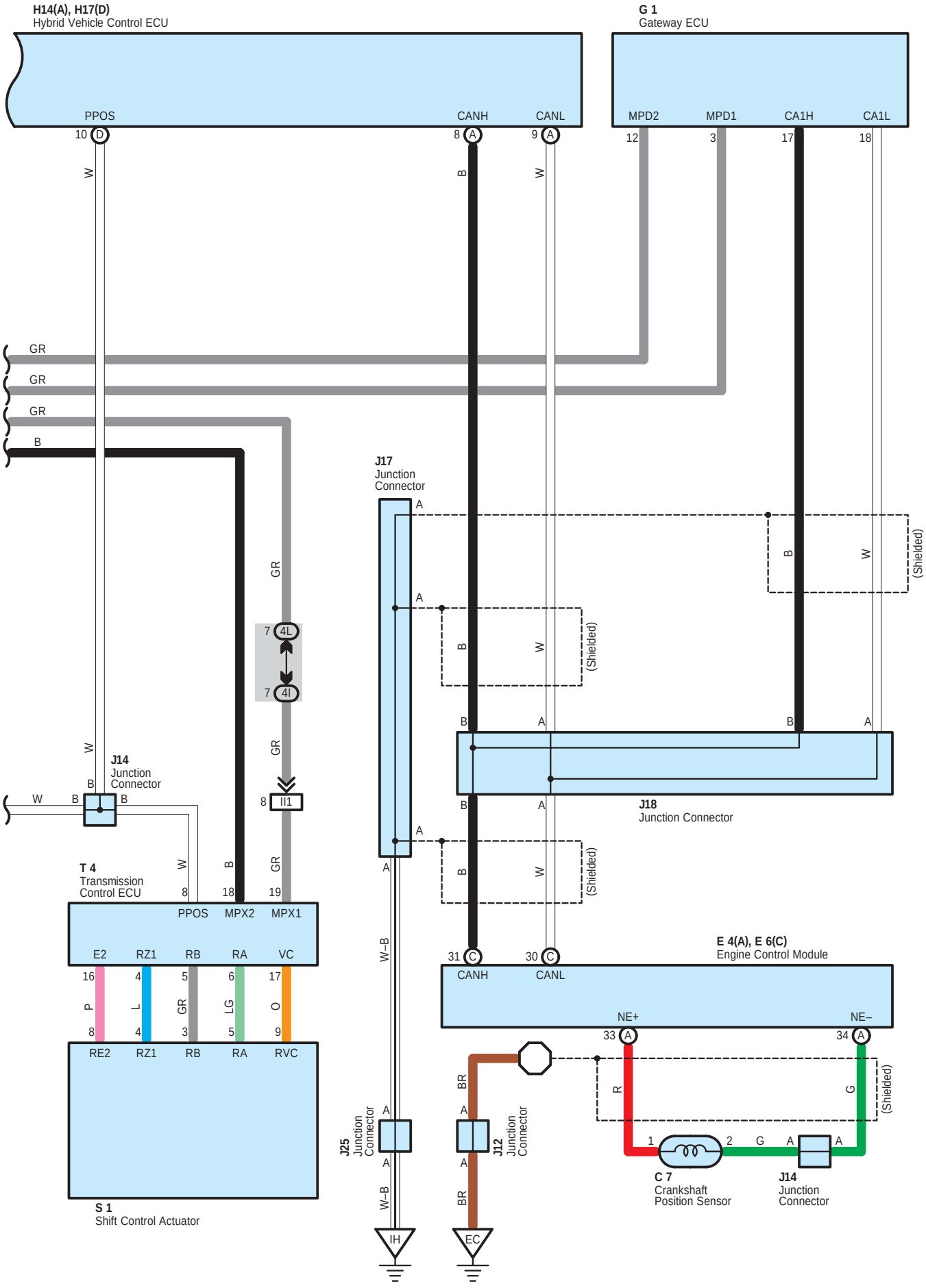
H14(A), H17(D)
Hybrid Vehicle Control ECU
PPOS
CANH
CANL
10 D
8 A
9 A
G 1
Gateway ECU
MPD2
MPD1
CA1H
CA1L
12
3
17
18
W
B
GR
GR
GR
B
J17
Junction
Connector
A
A
B
W
(Shielded)
7 4L
7 4I
GR
J14
Junction
Connector
W
B
W
B
B
8 II1
J18
Junction Connector
T 4
Transmission
Control ECU
W
B
GR
8
18
19
PPOS
MPX2
MPX1
E2
RZ1
RB
RA
VC
16
4
5
6
17
P
L
GR
LG
O
8
4
3
5
9
RE2
RZ1
RB
RA
RVC
S 1
Shift Control Actuator
W–B
31 C
30 C
CANH
CANL
E 4(A), E 6(C)
Engine Control Module
NE+
NE–
33 A
34 A
BR
R
G
J25
Junction
Connector
J12
Junction
Connector
1
2
G
A
C 7
Crankshaft
Position Sensor
J14
Junction
Connector
IH
EC

System Outline

Smart key system is a system to enable, without operating the key, to lock/unlock doors, to unlatch luggage compartment door, to start engine (Motor). It owes interactive communication function of electrical key, which makes the vehicle to recognize where the key is. All that driver has to do is to have the key with him or her. If the electrical key runs out of dry battery, the key operates as normal key without the smart key system.

1. Smart Door Unlock Function

When all the doors are locked, oscillator of each door sends signal regularly and forms detecting area outside of passenger room around 0.7 to 1m from each door handle. After forming the area, driver goes in the area with the electrical key, the key sends ID code signal. Certification ECU receives the signal through electrical key antenna and identifies ID code. After identifying ID code, doors in the area get into unlock stand–by condition. At this time, sensors installed in door handles activate. Touching back of door handles unlocks the door locks, lights up hazard lamp and sounds wireless door lock buzzer. If any door is not opened within 30 seconds after unlocking the door lock, the doors lock again.

2. Smart Door Lock Function

If driver gets off the vehicle with the electrical key and pushes lock SW of door handles when all doors are locked, certification ECU sends signal to inside and outside of passenger room to identify the electrical key. In case identification with inside of the passenger room is NG and that with outside of it is OK, doors lock. Door ajar alarm sounds to tell a door is not shut properly when lock SW of door handle is pushed with any door opened.

3. Smart Luggage Compartment Door Unlatch Function

If the driver stands in front of luggage compartment door with the electrical key and pushes unlock SW of luggage compartment door, ID code of the electrical key is identified with certification ECU through luggage oscillator (Outer). After the ID code is identified, luggage compartment door is unlocked. To keep pushing luggage compartment door opener SW unlatches luggage compartment door.

4. Smart Ignition (READY) Function

When the driver pushes the power SW with the electrical key with him or her, ID code of the electrical key is identified with certification ECU by room oscillator in passenger room. After the ID code is identified, hybrid vehicle immobiliser is released and electric power is set at ACC ON to enable to start engine. Then pushing the power SW sets power supply at IG ON and another pushing sets it at OFF. Condition circulates from ACC ON to/from IG ON to/from OFF and to ACC ON. The vehicle gets READY to drive when the driver pushes power SW with applying brake pedal at any power supply condition.

5. Smart Alarm Function

- If any door is opened and then shut with shift at P position and the power SW at other than OFF position, certification ECU identifies ID code with inside of passenger room twice. In case the identification result is NG, buzzer in combination meter alarms (Once) and wireless door lock buzzer alarms (Three times), and smart warning light in combination meter lights up. If power supply is pushed OFF with power SW or identification of the electrical key with inside of passenger room is confirmed at the second time, the warning stops.
- If all the doors are closed with shift at P position and power SW at other than OFF position, pushing lock SW of door handle starts certification ECU to identify ID code with inside and outside of passenger room. In case result of identification with inside is NG and that with outside is confirmed, wireless door lock buzzer alarms (For two seconds) and doors do not lock.
- If driver's side door is opened and then shut with shift at other than P position and power SW at other than OFF position, certification ECU identifies ID code with inside of passenger room twice. In case the identification result is NG, buzzer in combination meter and wireless door lock buzzer alarm continuously as well as smart warning light in combination meter lights up. Then, if shift is put into P position or the identification with inside is confirmed at the second time, the continuos alarming stops. If the driver turns electric power OFF with power SW or the identification with inside is confirmed at the second time, smart warning light goes off.
- If other doors than driver's side door is opened and then shut with shift at other than P position and power SW at other than OFF position, certification ECU identifies ID code with inside of passenger room twice. In case the identification result is NG, buzzer in combination meter alarms (Once) and wireless door lock buzzer alarms (Three times), and smart warning light in combination meter lights up. If power supply is pushed OFF with power SW or identification with inside of passenger room is confirmed at the second time, the warning stops.
- If lock SW of door handle is pushed with all the doors shut and power SW at OFF position, certification ECU identifies ID code with inside of passenger room twice. In case the identification is confirmed then, wireless door lock buzzer alarms (For two seconds) but doors do not lock.
- If power supply is turned OFF with power SW after "READY to drive" condition are kept for about 20 minutes, certification ECU identifies ID code of the electrical key with inside of passenger room. In case the ECU recognizes code of battery voltage decrease, buzzer in combination meter alarms once.
- If power SW is pushed ON, certification ECU identifies ID code with inside of passenger room twice. In case the identification result is NG, buzzer in combination meter alarms once and smart warning light lights up for about five seconds. Then, driver's operation of power SW is cancelled.

6. Smart Door Unlock Mode Change Function

If lock button and PANIC button of electrical key are pushed simultaneously for about five seconds with power SW at off position and electrical key not in key holder, smart door unlock mode changes to all door unlock mode or to each door unlock mode (At front passenger door, it changes only to all door unlock condition). The unlock modes circulate. Wireless door lock buzzer and buzzer in combination meter sound to inform mode change.

7. Power Saving Function for Battery

In case the electrical key does not send signal for five days or longer, interval between identification time is extended from about 300 ms to 600 ms.

In case the electrical key does not send signal for 14 days or longer, or the key is in detected area outside of vehicle for ten minutes or longer, smart function stops its operation. Smart function resumes under following conditions.

* When lock and unlock signal of wireless function of the key is input and its ID code is identified.
* When doors are locked with lock SW ON.
* When doors are locked or unlocked with door key SW operation.

8. Manual Operation Function

Electrical key has lock, unlock, and PANIC buttons. It can operate wireless door locking manually. Its operation is the same as one without smart key system.

9. Smart Illumination Function

When driver goes in detected area outside of passenger room with electrical key with him or her and its ID code is identified, interior light, overhead J/B and key slot light up for about 15 seconds by timer.

10. Smart Entry System Cancelled

Smart key system is cancelled under following conditions.

* When smart key system cancel SW is turned on.
* When electrical key is inserted in key slot.
* When battery of electrical key is dead.

○ : Parts Location

Code	See Page	Code	See Page	Code	See Page
A8	48	H14 A	49	K3 B	50
B5 A	48	H17 D	49	L3	53
B6 B	48	I18	53	L4	53
B7 C	48	J6	50	L6	53
C7	46	J7 A	50	L7	53
C10	49	J8 B	50	O3	54
D1	49	J9	50	P6	51
D4	52	J10	50	P11	51
D7	52	J12	50	R8	51
D8	52	J14	50	S1	47
D9	52	J17	50	S7 A	51
D10	52	J18	50	S8 B	51
D12	52	J22	50	S9 C	51
D13	52	J23	50	S10 D	51
D14	52	J24	50	S11	51
D15	52	J25	50	S12	51
D16	52	J26	53	S16	51
D17	52	J27	53	T1	47
E4 A	49	J30	53	T4	51
E6 C	49	J31	53	T5	51
E8	53	J32	53	T11	51
E9	53	J33	53	W6	47
E10	53	J34	53		
G1	49	K2 A	50		

: **Relay Blocks**

Code	See Page	Relay Blocks (Relay Block Location)
3	22	Engine Room R/B (Engine Compartment Left)

: **Junction Block and Wire Harness Connector**

Code	See Page	Junction Block and Wire Harness (Connector Location)
1A	30	Engine Room Main Wire and Driver Side J/B (Lower Finish Panel)
1B		
1D	30	Floor Wire and Driver Side J/B (Lower Finish Panel)
1E	30	Instrument Panel Wire and Driver Side J/B (Lower Finish Panel)
1F		
1G		
1H		
1L	31	
1M		
1O	30	Roof Wire and Driver Side J/B (Lower Finish Panel)
3B	23	Engine Room Main Wire and Engine Room J/B (Engine Compartment Left)
3D		
3J	24	
4C	38	Instrument Panel Wire and Center Connector No.1 (Behind the Combination Meter)
4D		
4E		
4F		
4G		
4H		
4I		
4J		
4K		
4L		
5C	42	Instrument Panel Wire and Center Connector No.2 (Instrument Panel Brace RH)
5D		
5G		
5H		
5I		
5J		
5K		
5L		
5M		

: Connector Joining Wire Harness and Wire Harness

Code	See Page	Joining Wire Harness and Wire Harness (Connector Location)
IA1	58	Engine Room Main Wire and Instrument Panel Wire (Upper Parts of Front Body Pillar LH)
IA3		
IB1	58	Roof Wire and Instrument Panel Wire (Upper Parts of Front Body Pillar LH)
ID2	58	Instrument Panel Wire and Floor Wire (Left Kick Panel)
ID3		
ID4		
IE1	58	Front Door LH Wire and Instrument Panel Wire (Left Kick Panel)
IE2		
IG1	59	Instrument Panel Wire and Instrument Panel No.2 Wire (Behind the Combination Meter)
IG2		
II1	59	Engine Wire and Instrument Panel Wire (Behind the Glove Box)
IJ3	59	Engine Room Main Wire and Instrument Panel Wire (Behind the Glove Box)
IL1	59	Front Door RH Wire and Instrument Panel Wire (Right Kick Panel)
IL2		
IM1	59	Instrument Panel Wire and Floor No.2 Wire (Right Kick Panel)
BA1	60	Front Door LH Wire and Electrical Key LH Wire (Near the Front Door Outside Handle LH)
BB1	60	Rear Door No.2 Wire and Floor Wire (Left Center Pillar)
BH1	61	Back Door No.1 Wire and Floor Wire (Rear Side of Roof Panel)
BI1	61	Front Door RH Wire and Electrical Key RH Wire (Near the Front Door Outside Handle RH)
BJ1	61	Rear Door No.1 Wire and Floor No.2 Wire (Right Center Pillar)
BK2	61	Back Door No.1 Wire and Back Door No.2 Wire (Rear Side of Roof Panel)

: Ground Points

Code	See Page	Ground Points Location
EC	56	Engine Block
EE	56	Left Side of the Suspension Tower
IH	58	Cowl Side Panel LH
II	58	Instrument Panel Brace LH
BL	60	Rear Side of Left Quarter Panel
BO	60	Center of the Back Door Panel
BQ	60	Rear Side of Right Quarter Panel

Wireless Door Lock Control without Smart Key System

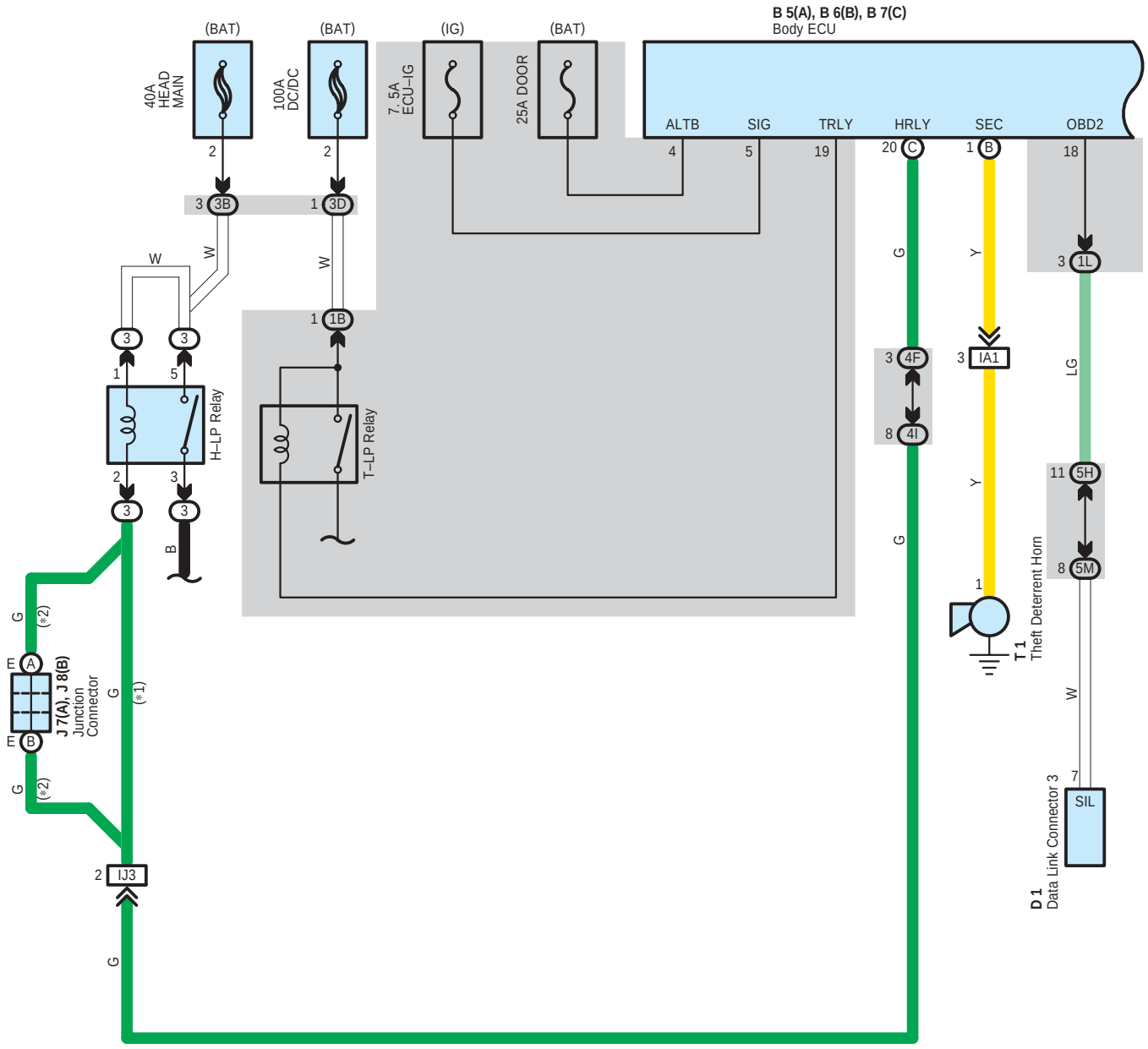

* 1 : w/ Daytime Running Light
* 2 : w/o Daytime Running Light

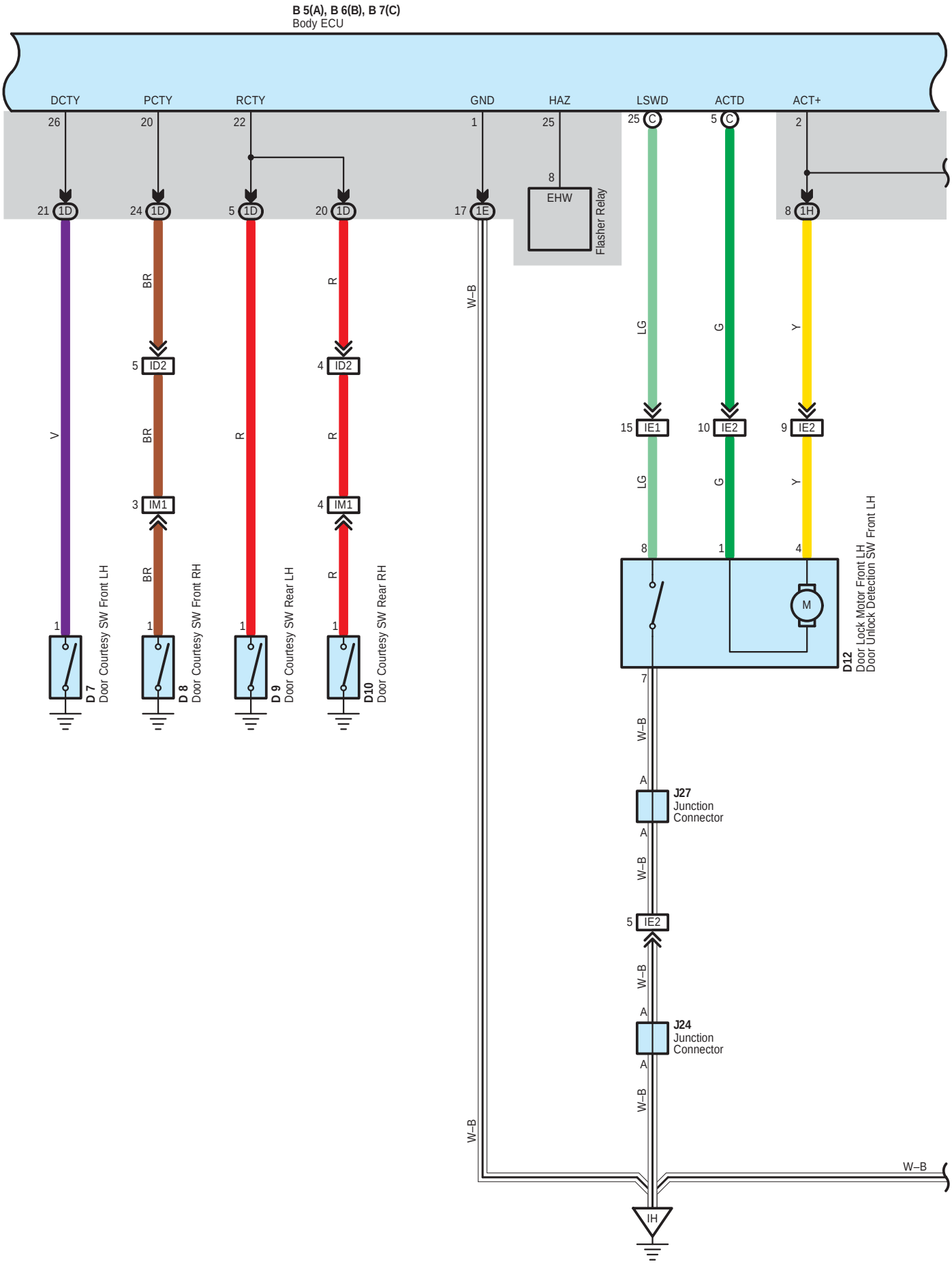
B 5(A), B 6(B), B 7(C)
Body ECU
DCTY
PCTY
RCTY
GND
HAZ
LSWD
ACTD
ACT+
26
20
22
1
25
25
5
2
8
EHW
Flasher Relay
21 1D
24 1D
5 1D
20 1D
17 1E
8 1H
V
BR
R
LG
G
Y
5 ID2
4 ID2
15 IE1
10 IE2
9 IE2
3 IM1
4 IM1
8
1
4
M
D12
Door Lock Motor Front LH
Door Unlock Detection SW Front LH
7
W–B
A
J27
Junction
Connector
5 IE2
J24
Junction
Connector
IH
D 7
Door Courtesy SW Front LH
D 8
Door Courtesy SW Front RH
D 9
Door Courtesy SW Rear LH
D10
Door Courtesy SW Rear RH

Wireless Door Lock Control without Smart Key System

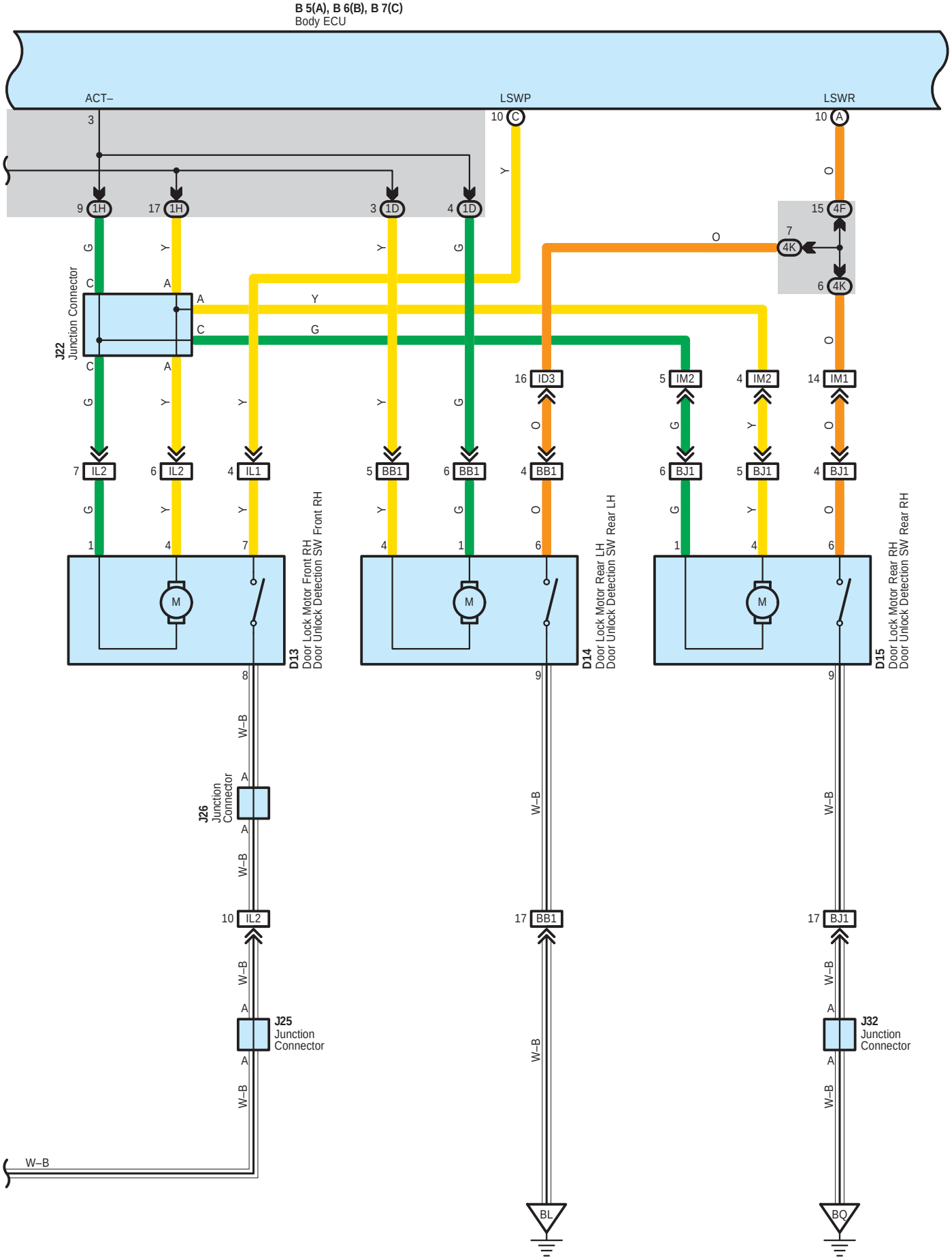

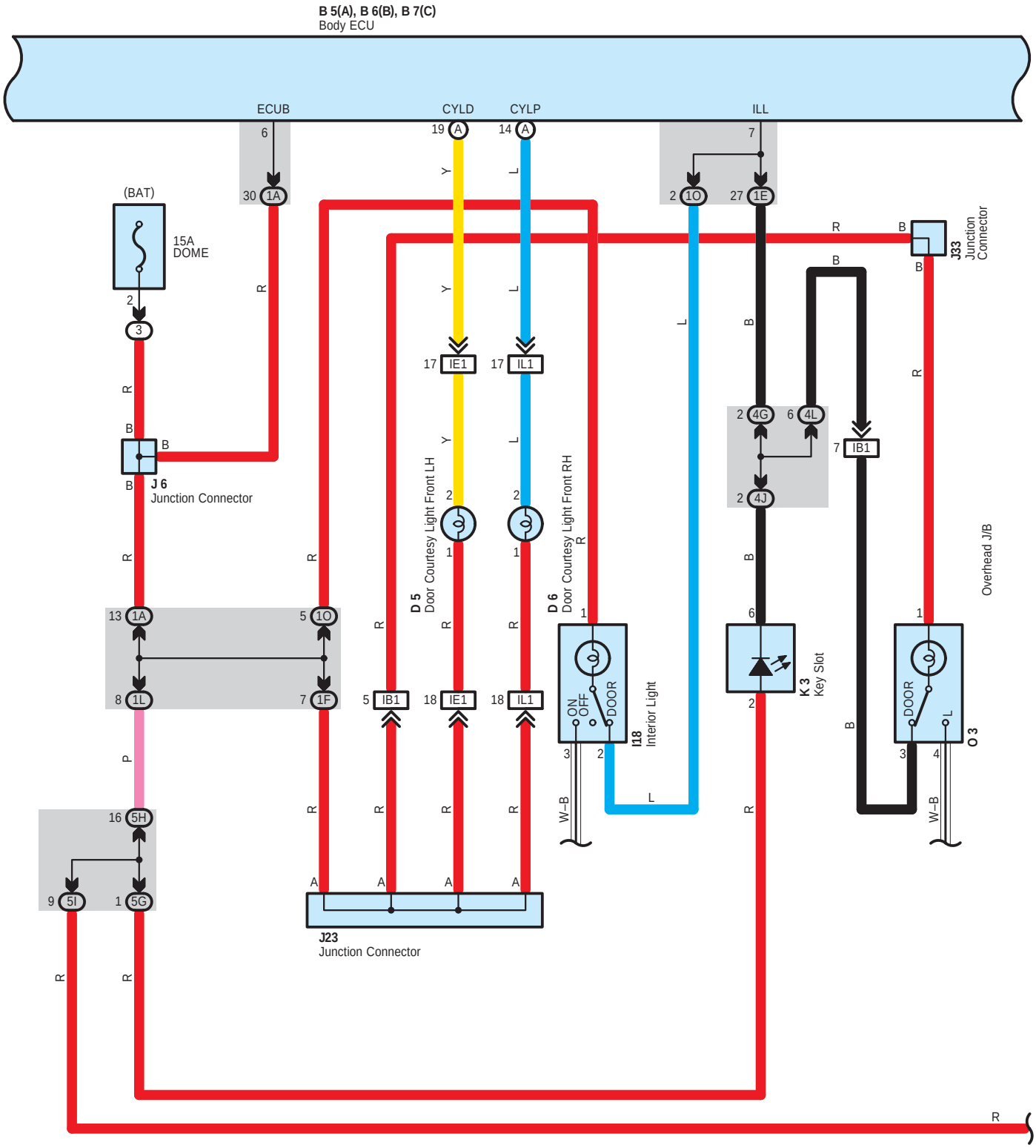
B 5(A), B 6(B), B 7(C)
Body ECU
ECUB
CYLD
CYLP
ILL
(BAT)
15A
DOME
J 6
Junction Connector
J33
Junction Connector
D 5
Door Courtesy Light Front LH
D 6
Door Courtesy Light Front RH
I18
Interior Light
K 3
Key Slot
O 3
Overhead J/B
J23
Junction Connector
ON
OFF
DOOR
W–B

Wireless Door Lock Control without Smart Key System

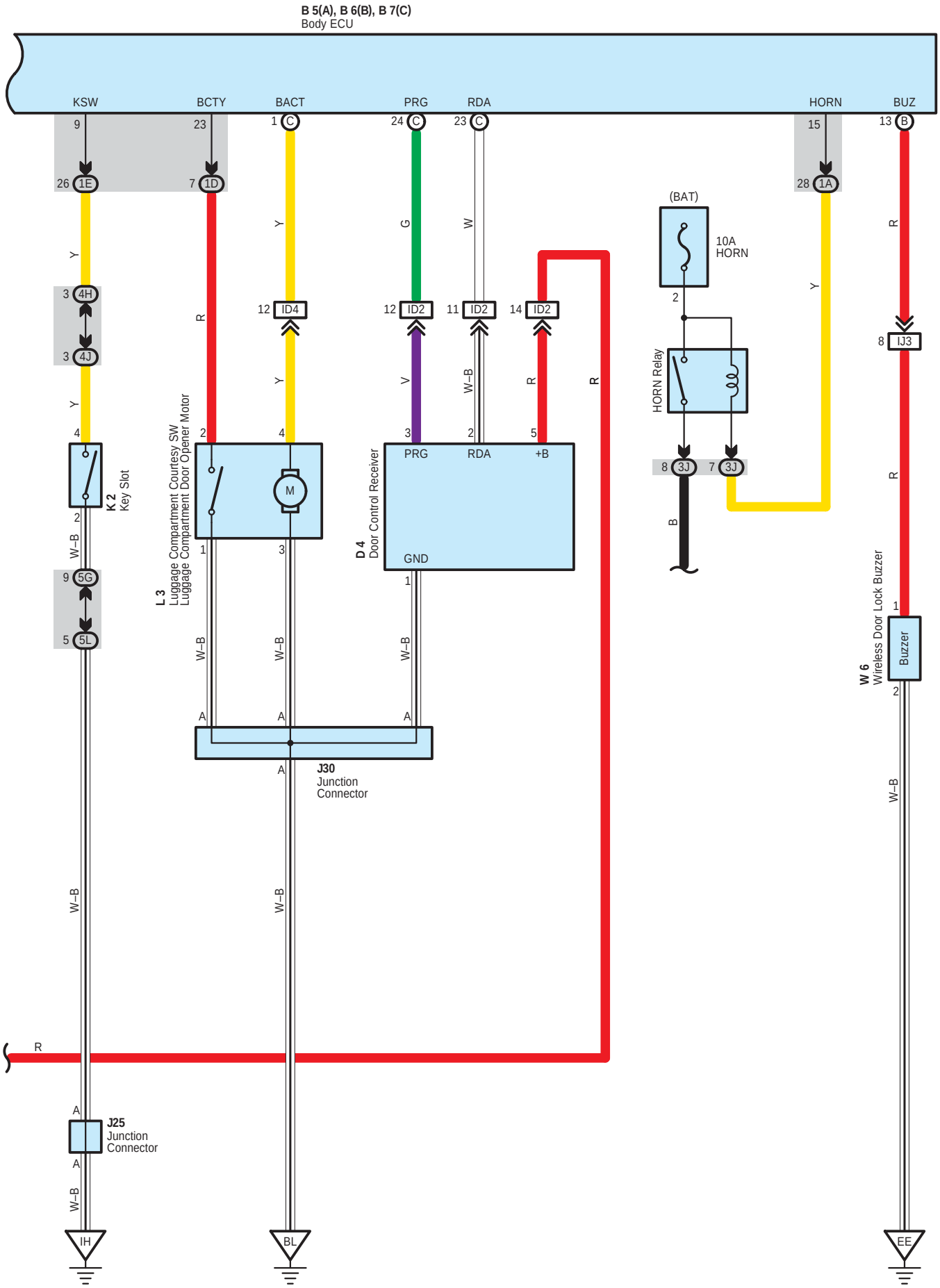

System Outline

Door lock control (Lock and unlock) and panic control (Theft alarm and flash) is performed by remote control, without the key inserted in the door key cylinder, using low–power electrical waves emitted from a transmitter.

1. Normal Operation

∗ Lock operation
When the lock SW on the transmitter is pressed, all the doors will lock.
∗ Unlock operation
When the unlock SW on the transmitter is pressed once, only the driver door will unlocks. When the unlock SW is pressed again within 3 seconds, all the doors will unlock.

2. Auto Lock Function

When the door is not actually opened within 30 seconds after the door has been unlocked by the unlock SW on the transmitter, all the doors will automatically lock. If any one of the following conditions is detected, the wireless door lock does not function.
∗ Any door is opened.
∗ The electrical key is inserted in the key slot.
∗ Power SW is on

3. Wireless Door Lock Stop Function

If any one of the following conditions is detected, the wireless door lock does not function.
Lock operation
∗ When any door is open (Door courtesy SW on)
∗ The electrical key is inserted in the key slot (Unlock warning SW on)
∗ Power SW is on
Unlock operation
∗ Power SW is on
∗ The electrical key is inserted in the key slot

4. Visual Confirmation of Lock or Unlock

During lock operation, when the body ECU receives a lock signal from the door lock detection SW, the turn signal light flashes once. During unlock operation, when the body ECU receives an unlock signal from the door lock detection SW, the turn signal light flashes twice.

5. Remote Panic Operation

Panic will function when doors are locked or unlocked, open or closed. When the panic button (Transmitter) is pushed once, interior lights light up, and theft alarm and horn sounds and turn signal lights, headlights and taillights flash. Then, any one of the button (Transmitter) is pushed once again, interior lights turn off, sounding and flashing will stop. Panic will not function when power SW is on.

6. Repeat Function

If the lock detection signal is not received in response to the output signal after the body ECU has output the lock signal, the lock signal is output again.

7. Illuminated Entry Function

When the body ECU detects the unlock state after the unlock operation has been made, it lights up the key slot, overhead J/B and interior light for approx. 15 sec. If all the doors are locked during this operation, lighting is cancelled and the lights immediately fade out.

○ : Parts Location

Code	See Page	Code	See Page	Code	See Page
B5 A	48	D13	52	J27	53
B6 B	48	D14	52	J30	53
B7 C	48	D15	52	J32	53
D1	49	I18	53	J33	53
D4	52	J6	50	K2	50
D5	52	J7 A	50	K3	50
D6	52	J8 B	50	L3	53
D7	52	J22	50	O3	54
D8	52	J23	50	T1	47
D9	52	J24	50	W6	47
D10	52	J25	50		
D12	52	J26	53		

Wireless Door Lock Control without Smart Key System

: Relay Blocks

Code	See Page	Relay Blocks (Relay Block Location)
3	22	Engine Room R/B (Engine Compartment Left)

: Junction Block and Wire Harness Connector

Code	See Page	Junction Block and Wire Harness (Connector Location)
1A	30	Engine Room Main Wire and Driver Side J/B (Lower Finish Panel)
1B		
1D	30	Floor Wire and Driver Side J/B (Lower Finish Panel)
1E	30	Instrument Panel Wire and Driver Side J/B (Lower Finish Panel)
1F		
1H		
1L	31	
1O	30	Roof Wire and Driver Side J/B (Lower Finish Panel)
3B	23	Engine Room Main Wire and Engine Room J/B (Engine Compartment Left)
3D		
3J	24	
4F	38	Instrument Panel Wire and Center Connector No.1 (Behind the Combination Meter)
4G		
4H		
4I		
4J		
4K		
4L		
5G	42	Instrument Panel Wire and Center Connector No.2 (Instrument Panel Brace RH)
5H		
5I		
5L		
5M		

: Connector Joining Wire Harness and Wire Harness

Code	See Page	Joining Wire Harness and Wire Harness (Connector Location)
IA1	58	Engine Room Main Wire and Instrument Panel Wire (Upper Parts of Front Body Pillar LH)
IB1	58	Roof Wire and Instrument Panel Wire (Upper Parts of Front Body Pillar LH)
ID2	58	Instrument Panel Wire and Floor Wire (Left Kick Panel)
ID3		
ID4		
IE1	58	Front Door LH Wire and Instrument Panel Wire (Left Kick Panel)
IE2		
IJ3	59	Engine Room Main Wire and Instrument Panel Wire (Behind the Glove Box)
IL1	59	Front Door RH Wire and Instrument Panel Wire (Right Kick Panel)
IL2		
IM1	59	Instrument Panel Wire and Floor No.2 Wire (Right Kick Panel)
IM2		
BB1	60	Rear Door No.2 Wire and Floor Wire (Left Center Pillar)
BJ1	61	Rear Door No.1 Wire and Floor No.2 Wire (Right Center Pillar)

: Ground Points

Code	See Page	Ground Points Location
EE	56	Left Side of the Suspension Tower
IH	58	Cowl Side Panel LH
BL	60	Rear Side of Left Quarter Panel
BQ	60	Rear Side of Right Quarter Panel

Luggage Compartment Door Opener

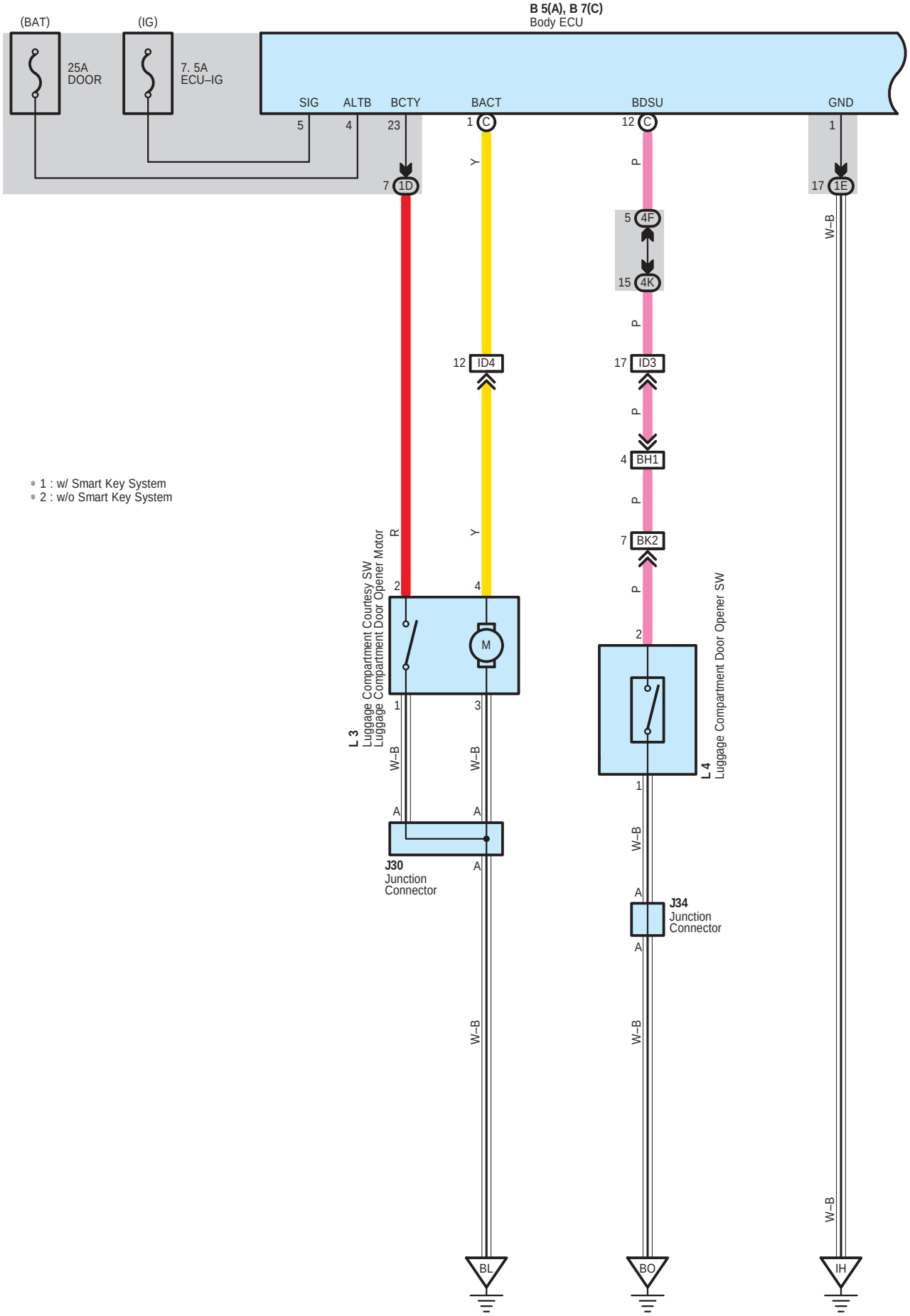

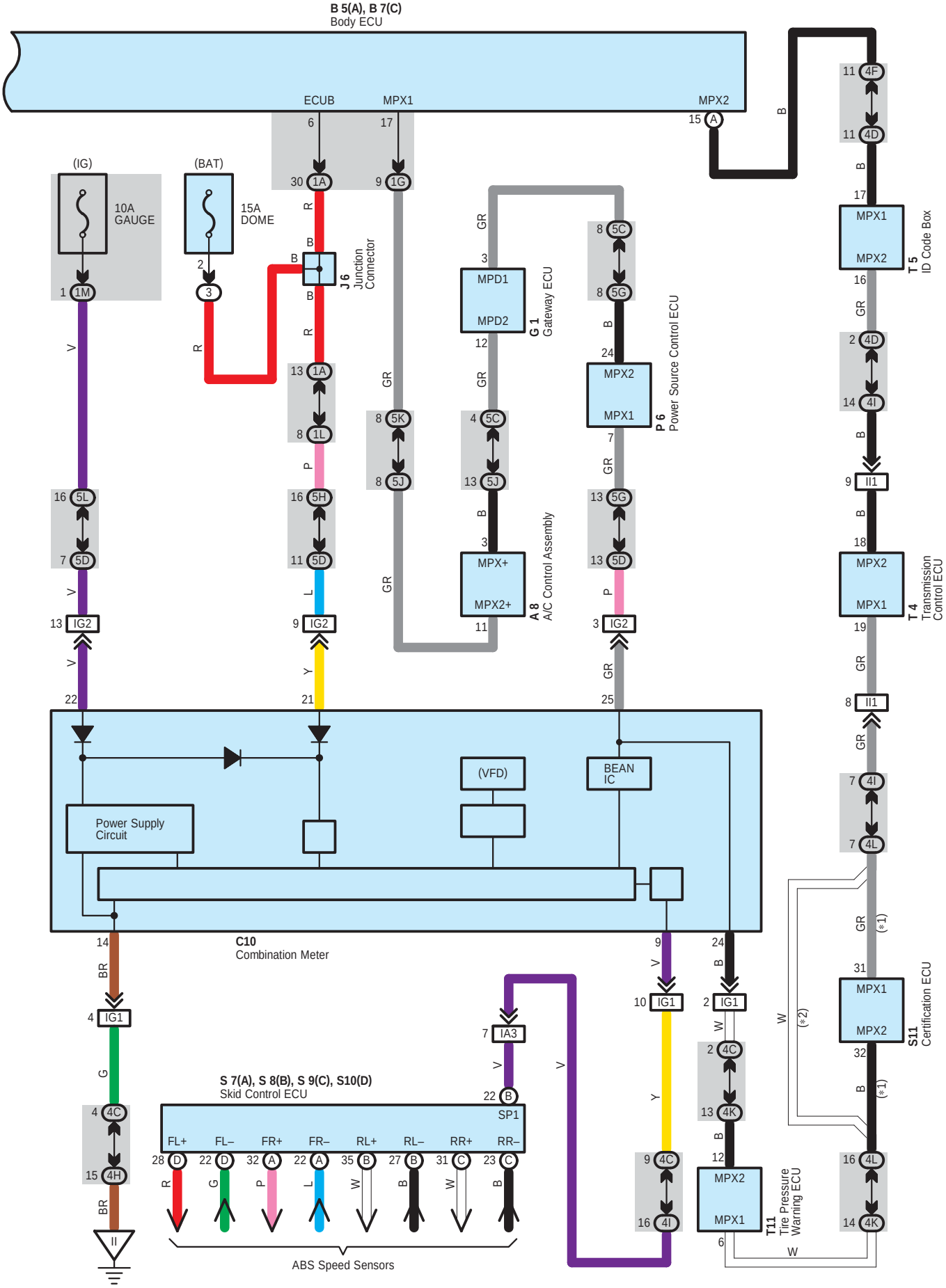
B 5(A), B 7(C)
Body ECU
ECUB
MPX1
MPX2
(IG)
(BAT)
10A
GAUGE
15A
DOME
J6
Junction
Connector
G 1
Gateway ECU
MPD1
MPD2
A 8
A/C Control Assembly
MPX+
MPX2+
P 6
Power Source Control ECU
T 5
ID Code Box
T 4
Transmission
Control ECU
S11
Certification ECU
T11
Tire Pressure
Warning ECU
IG2
IG1
IA3
(VFD)
BEAN
IC
Power Supply
Circuit
C10
Combination Meter
S 7(A), S 8(B), S 9(C), S10(D)
Skid Control ECU
SP1
FL+
FL–
FR+
FR–
RL+
RL–
RR+
RR–
ABS Speed Sensors
(*1)
(*2)

Luggage Compartment Door Opener

System Outline

If the vehicle is stationary (Slower than 5 km/h) and luggage compartment door is unlocked, the luggage compartment door opener motor activates with control of body ECU when luggage compartment door opener SW is pushed. It results in releasing latch of luggage compartment door to open luggage compartment door.

○ : Parts Location

Code	See Page	Code	See Page	Code	See Page
A8	48	J34	53	S10 D	51
B5 A	48	L3	53	S11	51
B7 C	48	L4	53	T4	51
C10	49	P6	51	T5	51
G1	49	S7 A	51	T11	51
J6	50	S8 B	51		
J30	53	S9 C	51		

▭ : Relay Blocks

Code	See Page	Relay Blocks (Relay Block Location)
3	22	Engine Room R/B (Engine Compartment Left)

▭ : Junction Block and Wire Harness Connector

Code	See Page	Junction Block and Wire Harness (Connector Location)
1A	30	Engine Room Main Wire and Driver Side J/B (Lower Finish Panel)
1D	30	Floor Wire and Driver Side J/B (Lower Finish Panel)
1E	30	Instrument Panel Wire and Driver Side J/B (Lower Finish Panel)
1G		
1L	31	
1M		
4C	38	Instrument Panel Wire and Center Connector No.1 (Behind the Combination Meter)
4D		
4F		
4H		
4I		
4K		
4L		
5C	42	Instrument Panel Wire and Center Connector No.2 (Instrument Panel Brace RH)
5D		
5G		
5H		
5J		
5K		
5L		

▭ : Connector Joining Wire Harness and Wire Harness

Code	See Page	Joining Wire Harness and Wire Harness (Connector Location)
IA3	58	Engine Room Main Wire and Instrument Panel Wire (Upper Parts of Front Body Pillar LH)
ID3	58	Instrument Panel Wire and Floor Wire (Left Kick Panel)
ID4		
IG1	59	Instrument Panel Wire and Instrument Panel No.2 Wire (Behind the Combination Meter)
IG2		
II1	59	Engine Wire and Instrument Panel Wire (Behind the Glove Box)
BH1	61	Back Door No.1 Wire and Floor Wire (Rear Side of Roof Panel)
BK2	61	Back Door No.1 Wire and Back Door No.2 Wire (Rear Side of Roof Panel)

▽ : **Ground Points**

Code	See Page	Ground Points Location
IH	58	Cowl Side Panel LH
II	58	Instrument Panel Brace LH
BL	60	Rear Side of Left Quarter Panel
BO	60	Center of the Back Door Panel

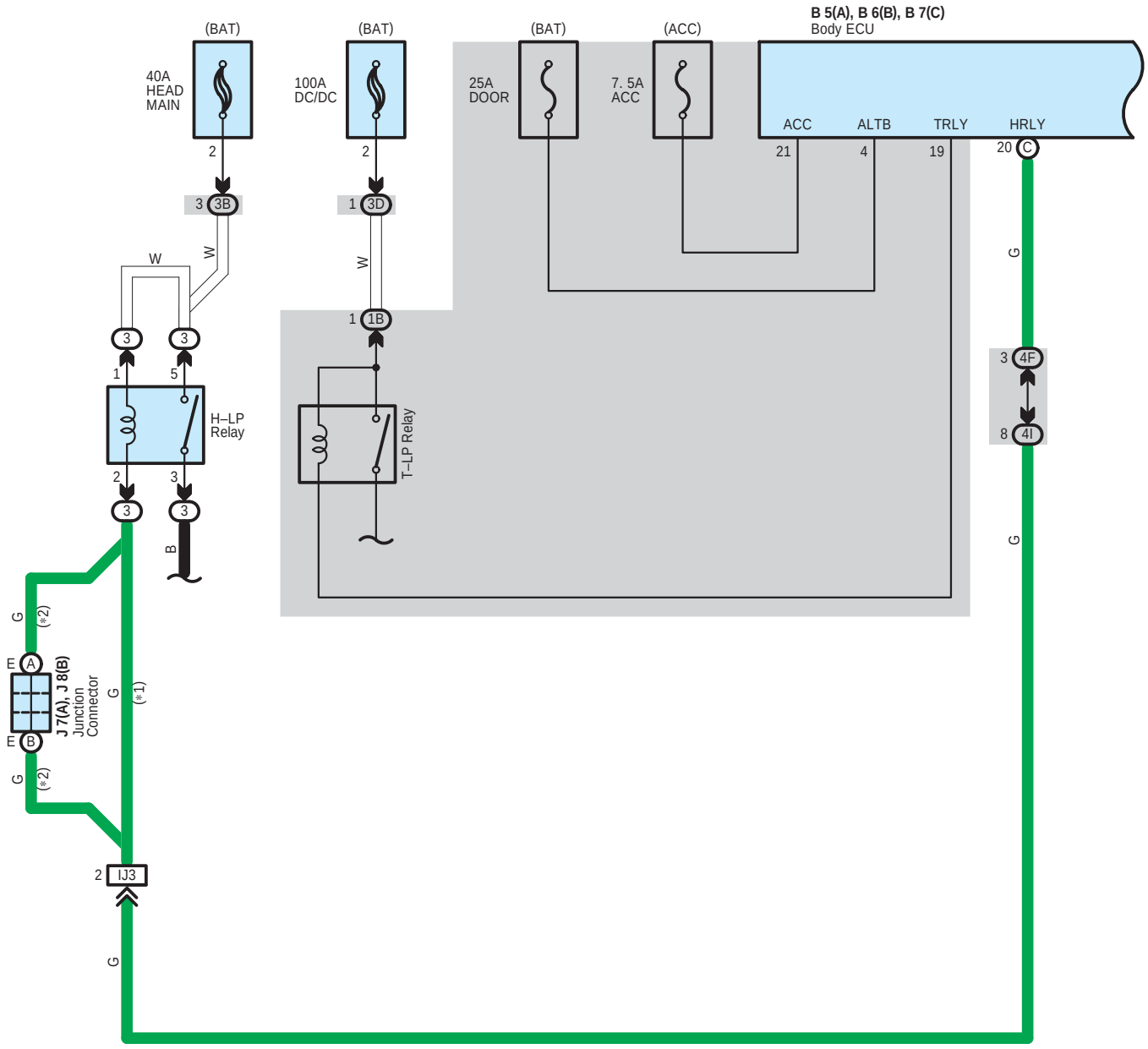

∗ 1 : w/ Daytime Running Light
∗ 2 : w/o Daytime Running Light

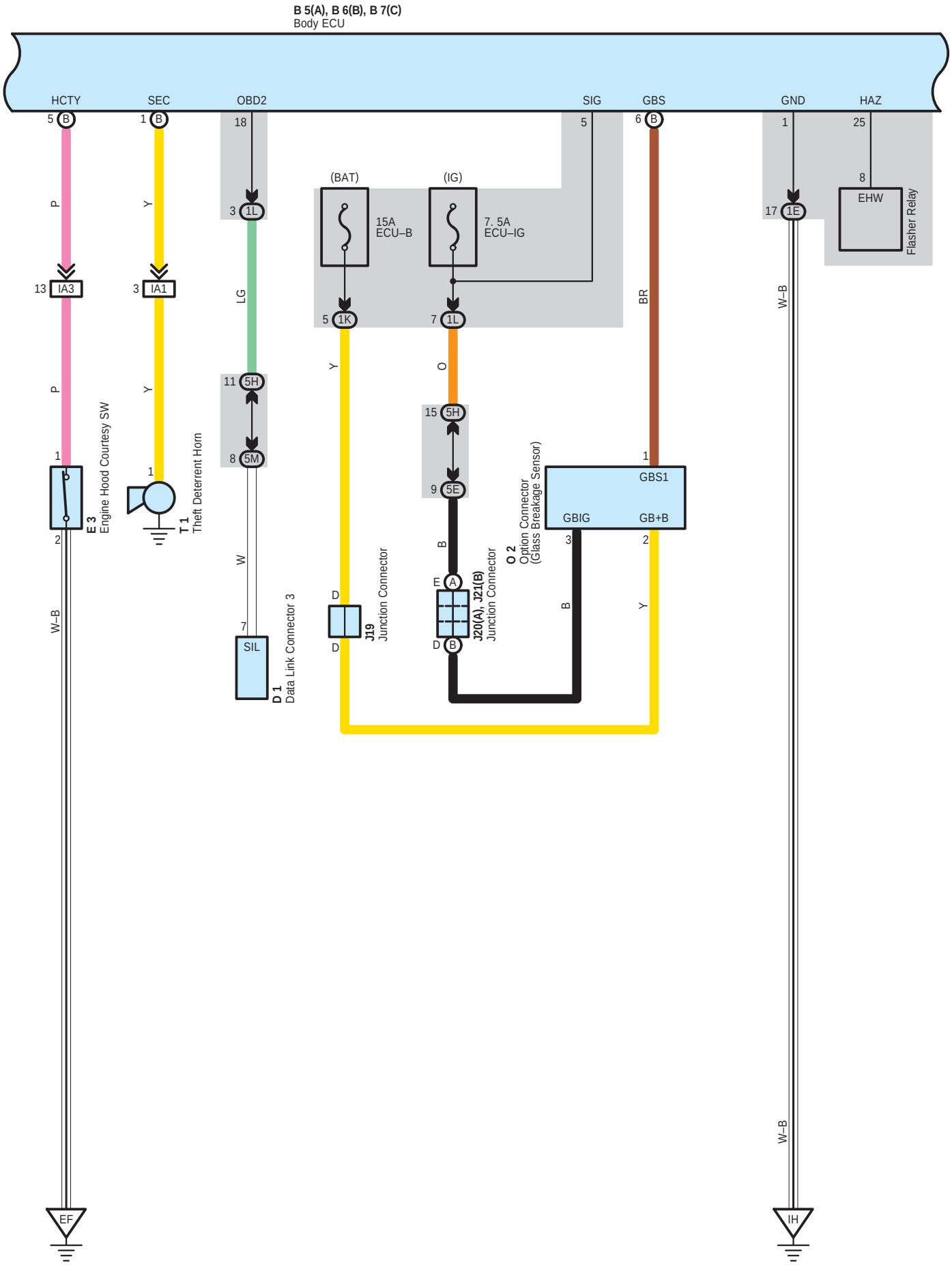
B 5(A), B 6(B), B 7(C)
Body ECU
HCTY
SEC
OBD2
SIG
GBS
GND
HAZ
5 B
1 B
18
5
6 B
1
25
P
Y
LG
BR
W–B
13 IA3
3 IA1
3 1L
17 1E
8
EHW
Flasher Relay
(BAT)
(IG)
15A
ECU–B
7. 5A
ECU–IG
5 1K
7 1L
11 5H
15 5H
9 5E
8 5M
1
GBS1
GBIG
GB+B
3
2
E 3
Engine Hood Courtesy SW
T 1
Theft Deterrent Horn
D 1
Data Link Connector 3
J19
Junction Connector
J20(A), J21(B)
Junction Connector
O 2
Option Connector
(Glass Breakage Sensor)
SIL
E A
D B
D D
EF
IH

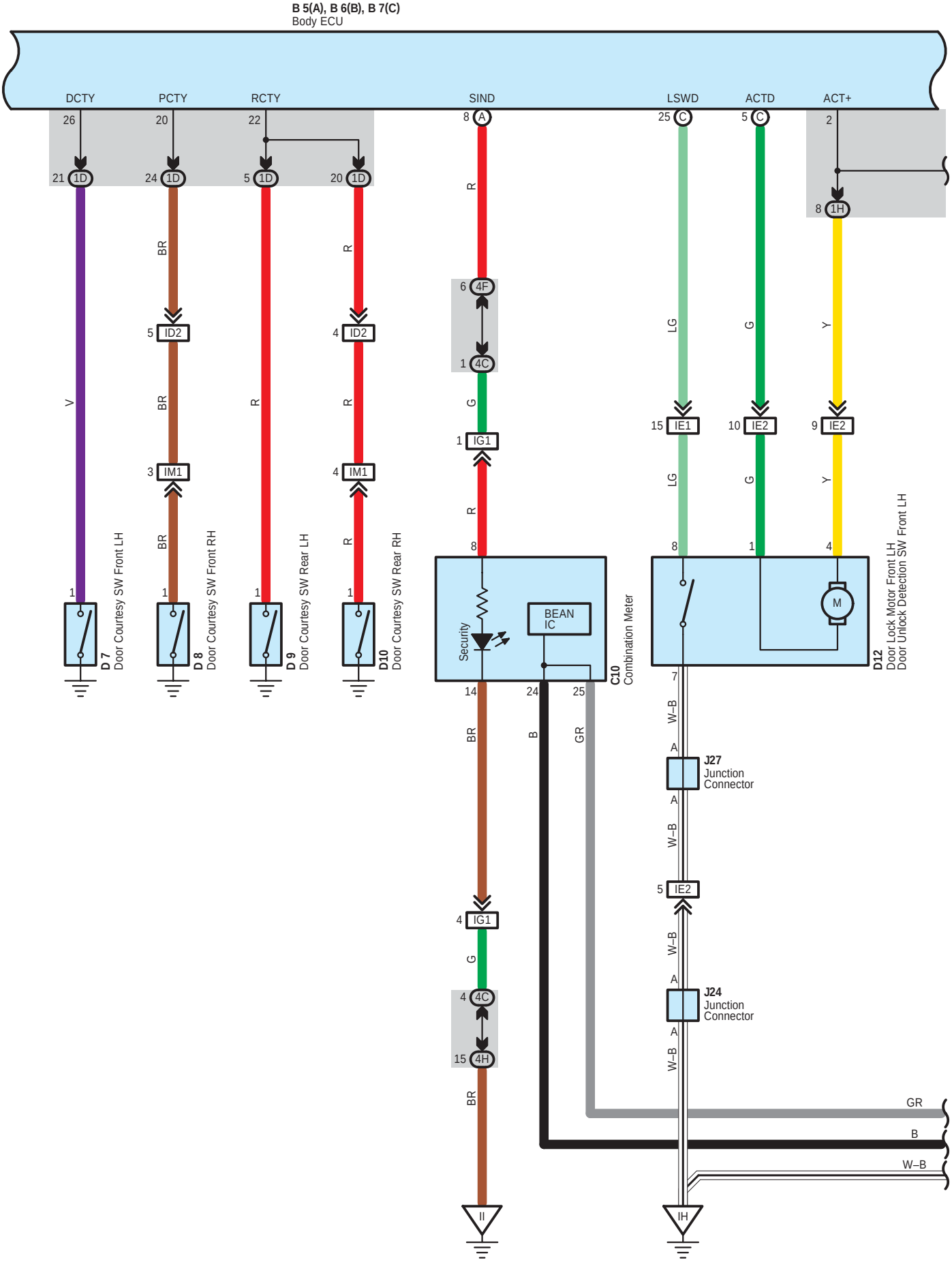
B 5(A), B 6(B), B 7(C)
Body ECU
DCTY
PCTY
RCTY
SIND
LSWD
ACTD
ACT+
D 7
Door Courtesy SW Front LH
D 8
Door Courtesy SW Front RH
D 9
Door Courtesy SW Rear LH
D10
Door Courtesy SW Rear RH
C10
Combination Meter
Security
BEAN IC
D12
Door Lock Motor Front LH
Door Unlock Detection SW Front LH
J27
Junction Connector
J24
Junction Connector
GR
B
W–B

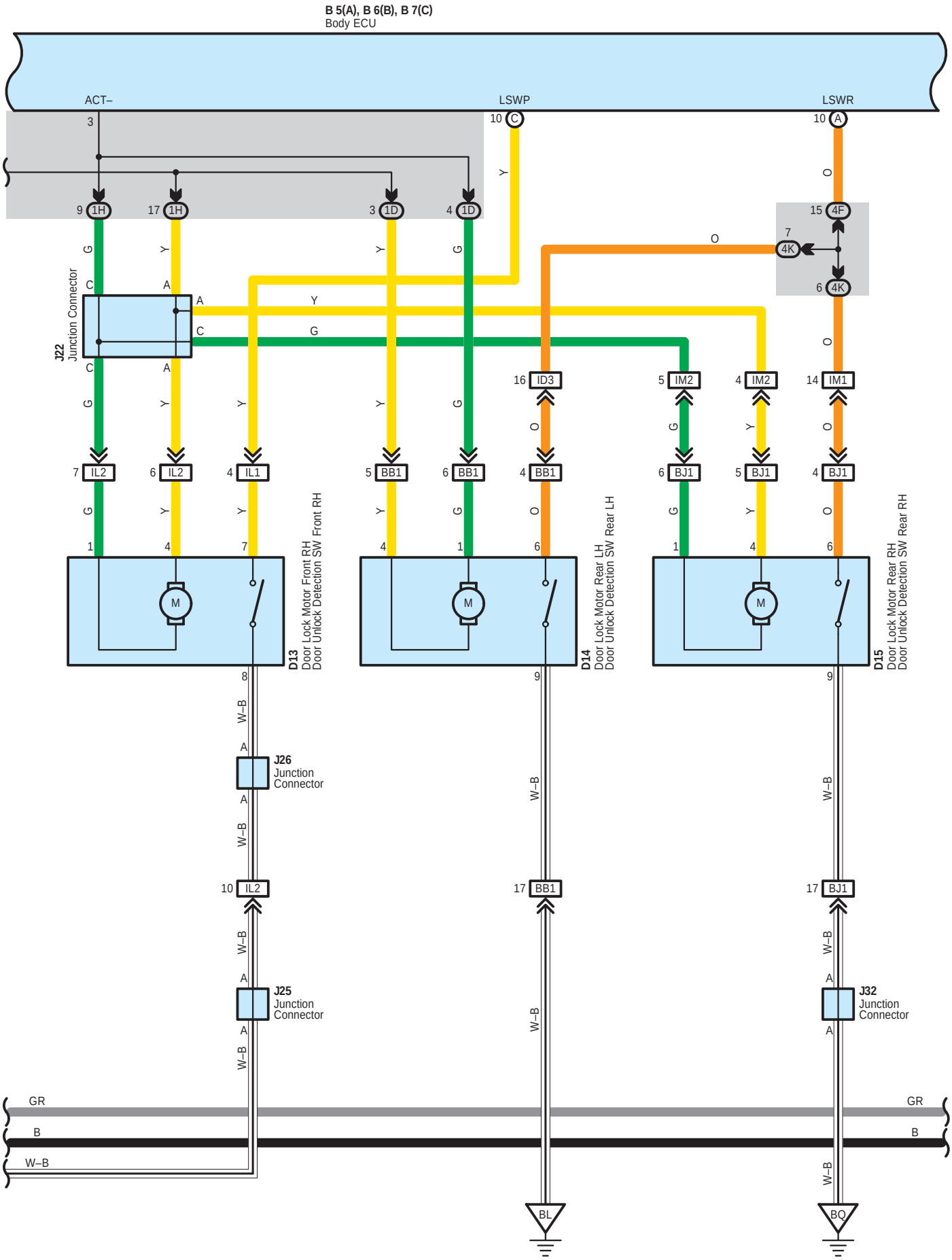
B 5(A), B 6(B), B 7(C)
Body ECU
ACT–
LSWP
LSWR
J22
Junction Connector
D13
Door Lock Motor Front RH
Door Unlock Detection SW Front RH
D14
Door Lock Motor Rear LH
Door Unlock Detection SW Rear LH
D15
Door Lock Motor Rear RH
Door Unlock Detection SW Rear RH
J26
Junction Connector
J25
Junction Connector
J32
Junction Connector
GR
B
W–B
BL
BQ

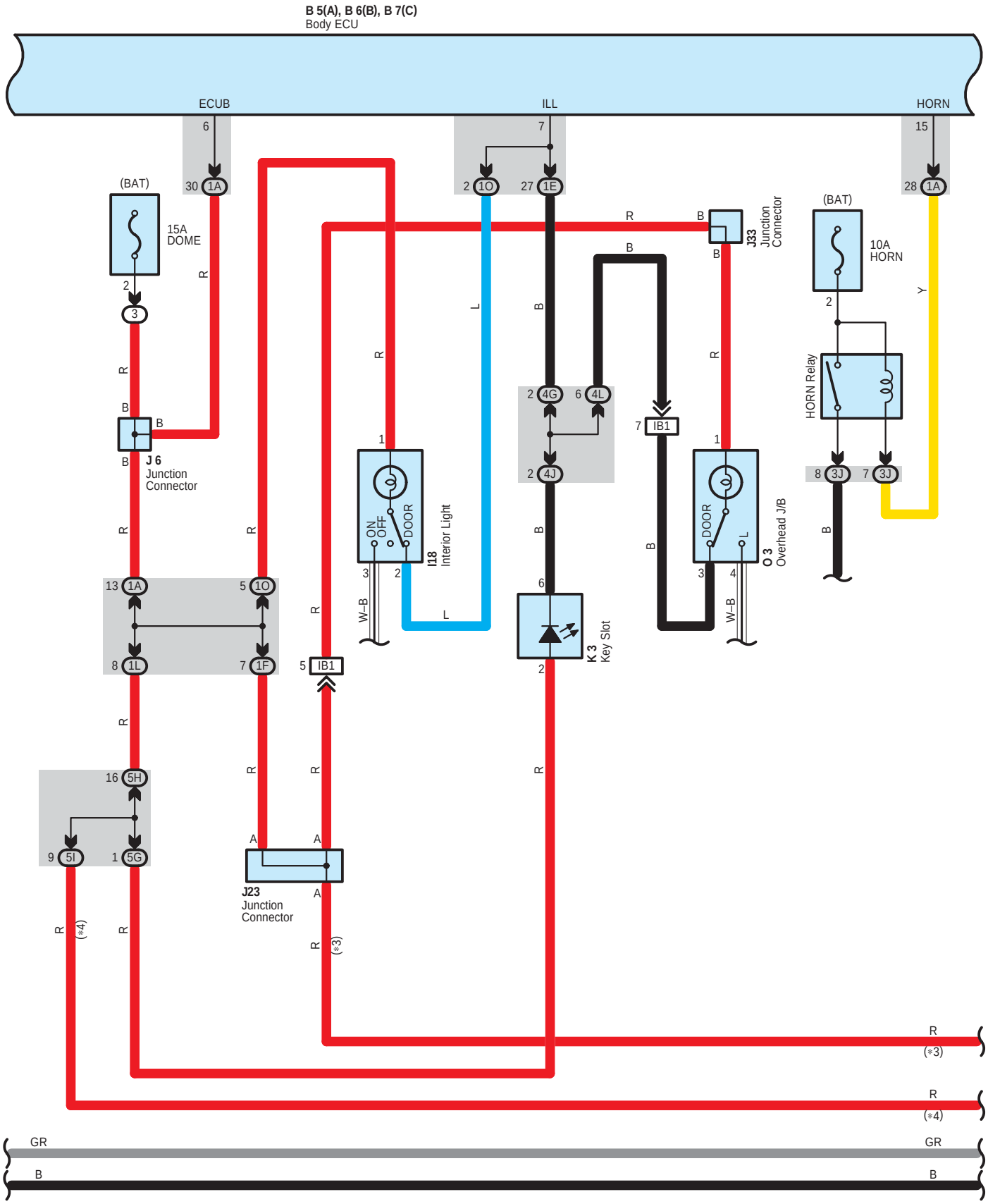
B 5(A), B 6(B), B 7(C)
Body ECU
ECUB
ILL
HORN
(BAT)
15A
DOME
J 6
Junction
Connector
J33
Junction
Connector
(BAT)
10A
HORN
HORN Relay
I18
Interior Light
ON
OFF
DOOR
O 3
Overhead J/B
K 3
Key Slot
IB1
J23
Junction
Connector
(*3)
(*4)
GR
B

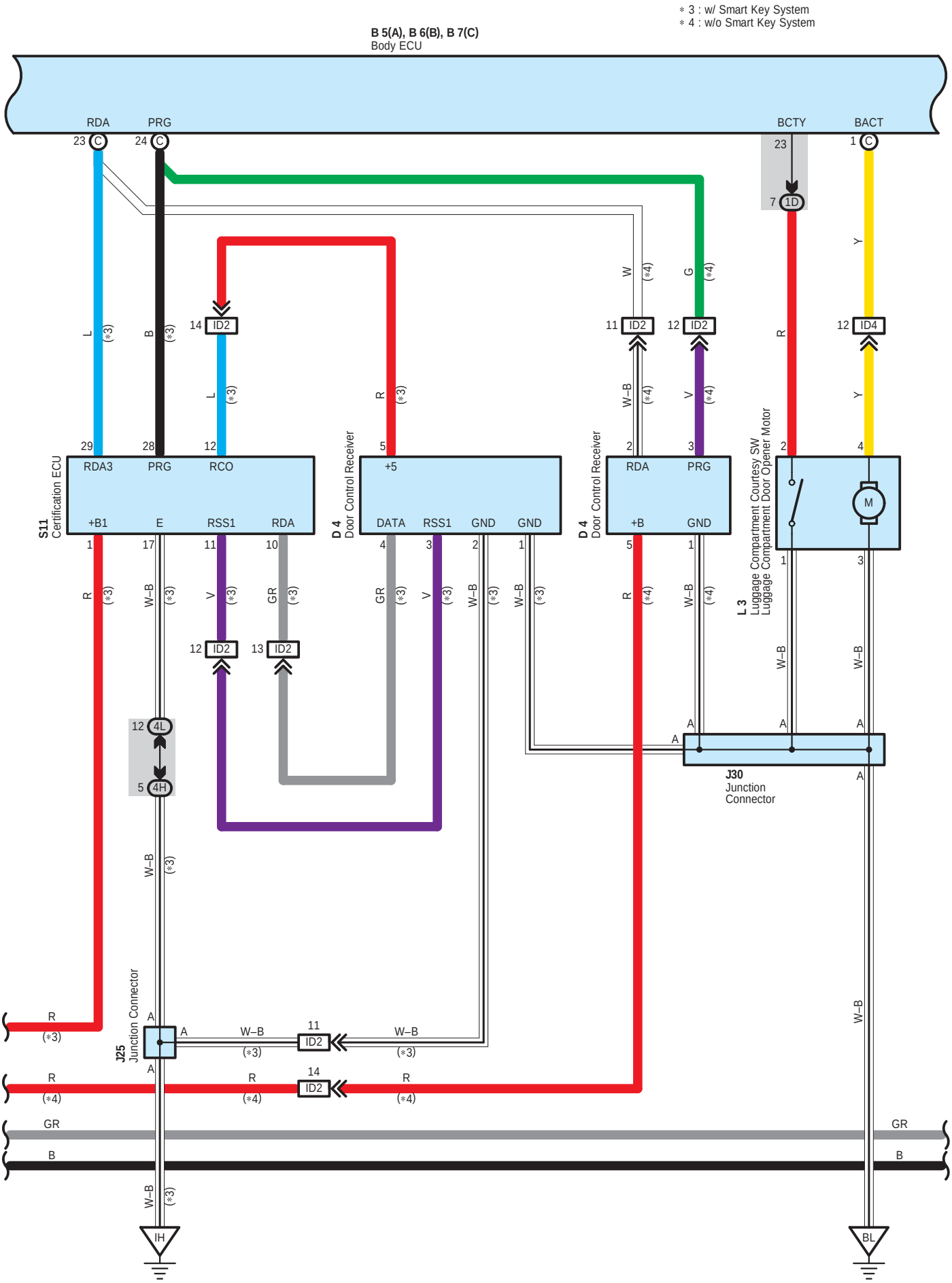
＊3 : w/ Smart Key System
＊4 : w/o Smart Key System
B 5(A), B 6(B), B 7(C)
Body ECU
RDA
PRG
BCTY
BACT
S11
Certification ECU
RDA3
PRG
RCO
+B1
E
RSS1
RDA
D 4
Door Control Receiver
+5
DATA
RSS1
GND
GND
D 4
Door Control Receiver
RDA
PRG
+B
GND
L 3
Luggage Compartment Courtesy SW
Luggage Compartment Door Opener Motor
M
J30
Junction
Connector
J25
Junction Connector
ID2
ID4
4L
4H
1D
IH
BL

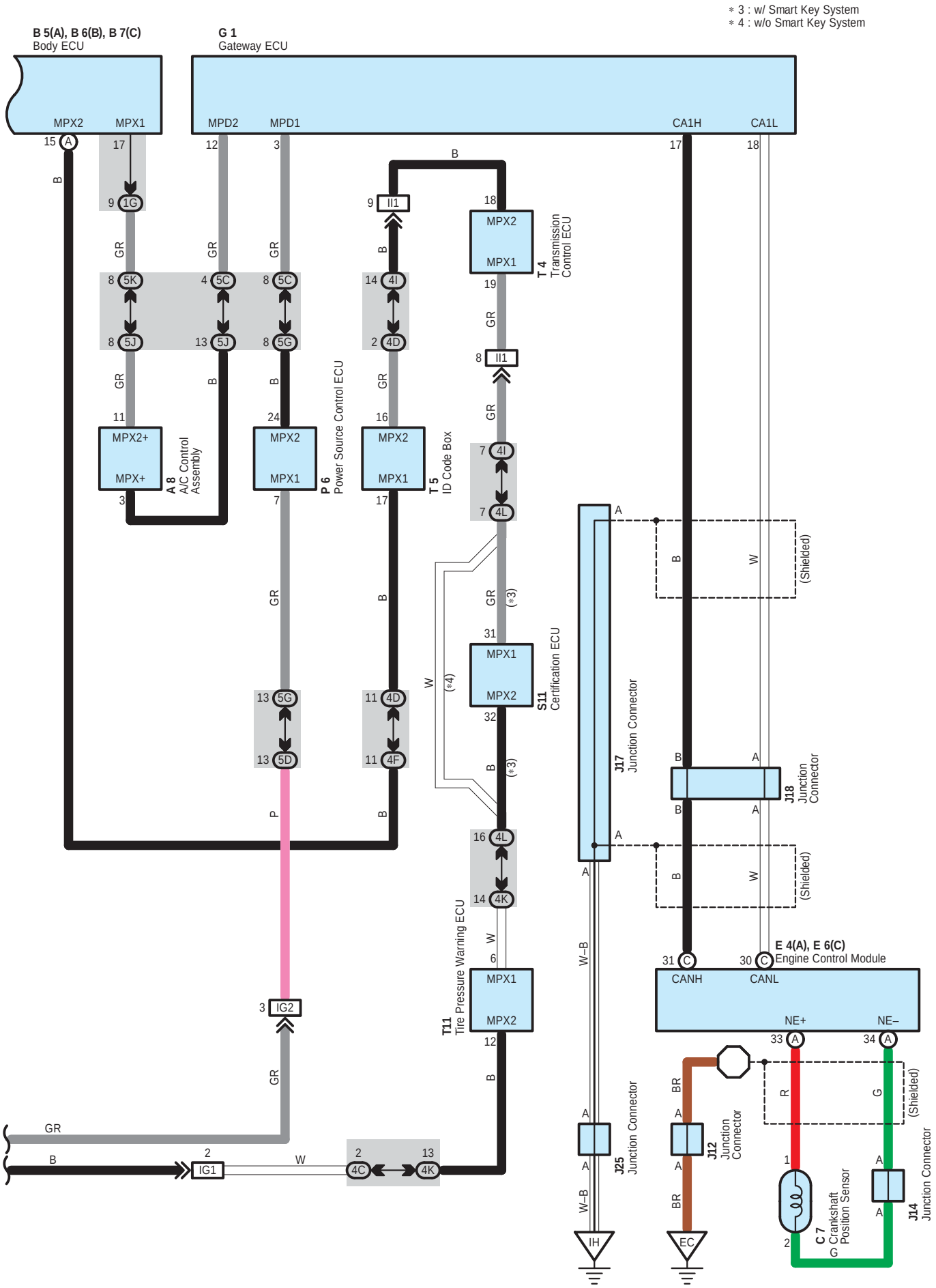
* 3 : w/ Smart Key System
* 4 : w/o Smart Key System
B 5(A), B 6(B), B 7(C)
Body ECU
G 1
Gateway ECU
MPX2
MPX1
MPD2
MPD1
CA1H
CA1L
A 8
A/C Control Assembly
P 6
Power Source Control ECU
T 5
ID Code Box
T 4
Transmission Control ECU
S11
Certification ECU
T11
Tire Pressure Warning ECU
J17
Junction Connector
J18
Junction Connector
J25
Junction Connector
J12
Junction Connector
J14
Junction Connector
C 7
G Crankshaft Position Sensor
E 4(A), E 6(C)
Engine Control Module
CANH
CANL
NE+
NE–
(Shielded)
IG1
IG2
IH
EC

○ : Parts Location

Code	See Page	Code	See Page	Code	See Page
A8	48	E4 A	49	J25	50
B5 A	48	E6 C	49	J26	53
B6 B	48	G1	49	J27	53
B7 C	48	I18	53	J30	53
C7	46	J6	50	J32	53
C10	49	J7 A	50	J33	53
D1	49	J8 B	50	K3	50
D4	52	J12	50	L3	53
D7	52	J14	50	O2	51
D8	52	J17	50	O3	54
D9	52	J18	50	P6	51
D10	52	J19	50	S11	51
D12	52	J20 A	50	T1	47
D13	52	J21 B	50	T4	51
D14	52	J22	50	T5	51
D15	52	J23	50	T11	51
E3	46	J24	50		

⬭ : Relay Blocks

Code	See Page	Relay Blocks (Relay Block Location)
3	22	Engine Room R/B (Engine Compartment Left)

: **Junction Block and Wire Harness Connector**

Code	See Page	Junction Block and Wire Harness (Connector Location)
1A	30	Engine Room Main Wire and Driver Side J/B (Lower Finish Panel)
1B		
1D	30	Floor Wire and Driver Side J/B (Lower Finish Panel)
1E	30	Instrument Panel Wire and Driver Side J/B (Lower Finish Panel)
1F		
1G		
1H		
1K	31	
1L		
1O	30	Roof Wire and Driver Side J/B (Lower Finish Panel)
3B	23	Engine Room Main Wire and Engine Room J/B (Engine Compartment Left)
3D		
3J	24	
4C	38	Instrument Panel Wire and Center Connector No.1 (Behind the Combination Meter)
4D		
4F		
4G		
4H		
4I		
4J		
4K		
4L		
5C	42	Instrument Panel Wire and Center Connector No.2 (Instrument Panel Brace RH)
5D		
5E		
5G		
5H		
5I		
5J		
5K		
5M		

: **Connector Joining Wire Harness and Wire Harness**

Code	See Page	Joining Wire Harness and Wire Harness (Connector Location)
IA1	58	Engine Room Main Wire and Instrument Panel Wire (Upper Parts of Front Body Pillar LH)
IA3		
IB1	58	Roof Wire and Instrument Panel Wire (Upper Parts of Front Body Pillar LH)
ID2	58	Instrument Panel Wire and Floor Wire (Left Kick Panel)
ID3		
ID4		
IE1	58	Front Door LH Wire and Instrument Panel Wire (Left Kick Panel)
IE2		
IG1	59	Instrument Panel Wire and Instrument Panel No.2 Wire (Behind the Combination Meter)
IG2		
II1	59	Engine Wire and Instrument Panel Wire (Behind the Glove Box)
IJ3	59	Engine Room Main Wire and Instrument Panel Wire (Behind the Glove Box)
IL1	59	Front Door RH Wire and Instrument Panel Wire (Right Kick Panel)
IL2		
IM1	59	Instrument Panel Wire and Floor No.2 Wire (Right Kick Panel)
IM2		
BB1	60	Rear Door No.2 Wire and Floor Wire (Left Center Pillar)
BJ1	61	Rear Door No.1 Wire and Floor No.2 Wire (Right Center Pillar)

▽ : **Ground Points**

Code	See Page	Ground Points Location
EC	56	Engine Block
EF	56	Left Side of the Suspension Tower
IH	58	Cowl Side Panel LH
II	58	Instrument Panel Brace LH
BL	60	Rear Side of Left Quarter Panel
BQ	60	Rear Side of Right Quarter Panel

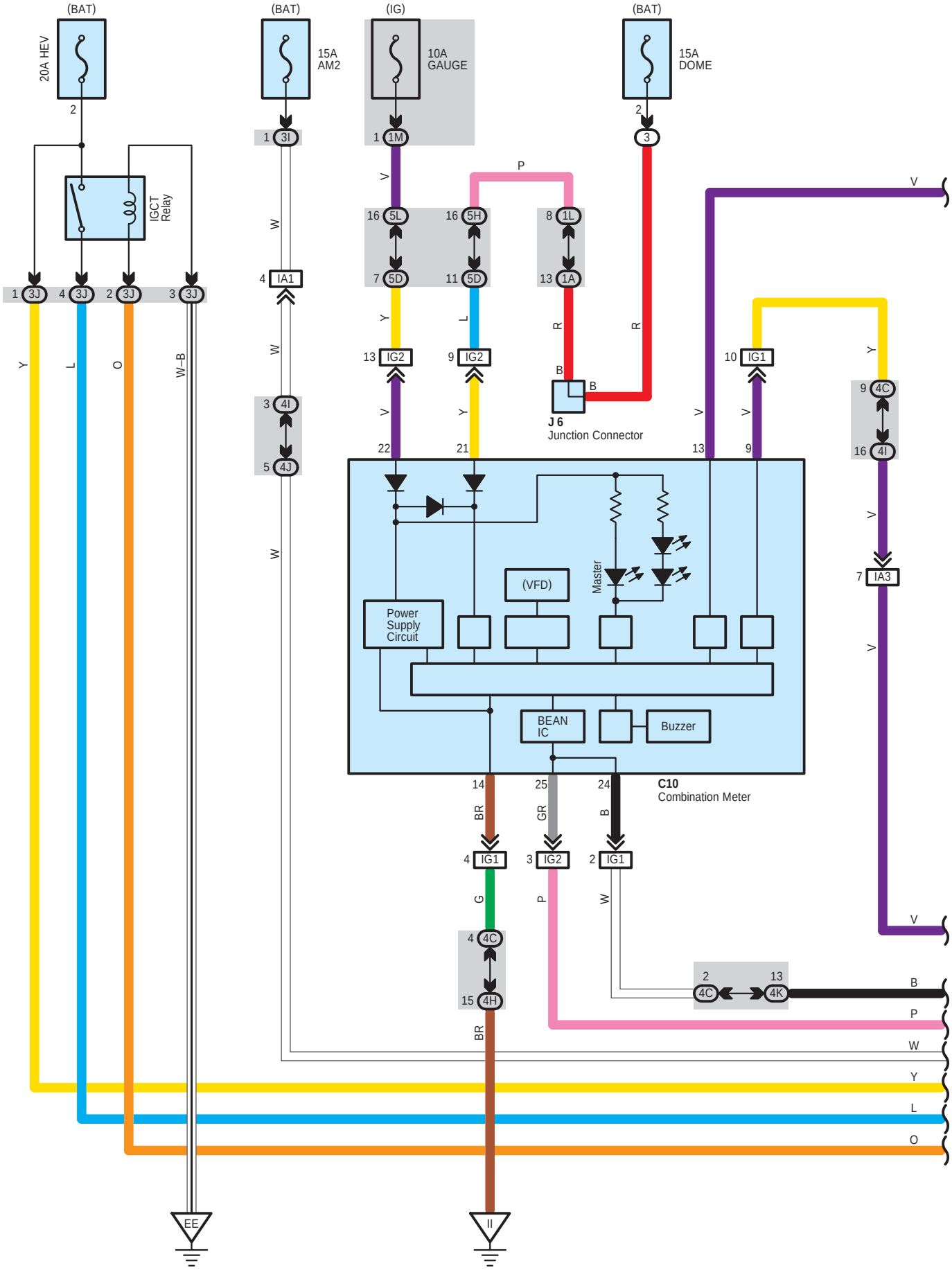
(BAT)
20A HEV
2
IGCT Relay
1 3J
4 3J
2 3J
3 3J
Y
L
O
W–B
(BAT)
15A AM2
1 3I
4 IA1
3 4I
5 4J
W
(IG)
10A GAUGE
1 1M
16 5L
7 5D
13 IG2
22
16 5H
11 5D
9 IG2
21
P
Y
L
V
W
(BAT)
15A DOME
2
3
8 1L
13 1A
R
B
J 6
Junction Connector
10 IG1
9
9 4C
16 4I
7 IA3
13
(VFD)
Master
Power Supply Circuit
BEAN IC
Buzzer
C10
Combination Meter
14
25
24
BR
GR
B
4 IG1
3 IG2
2 IG1
G
P
W
4 4C
15 4H
BR
2 4C
13 4K
B
P
W
Y
L
O
EE
II

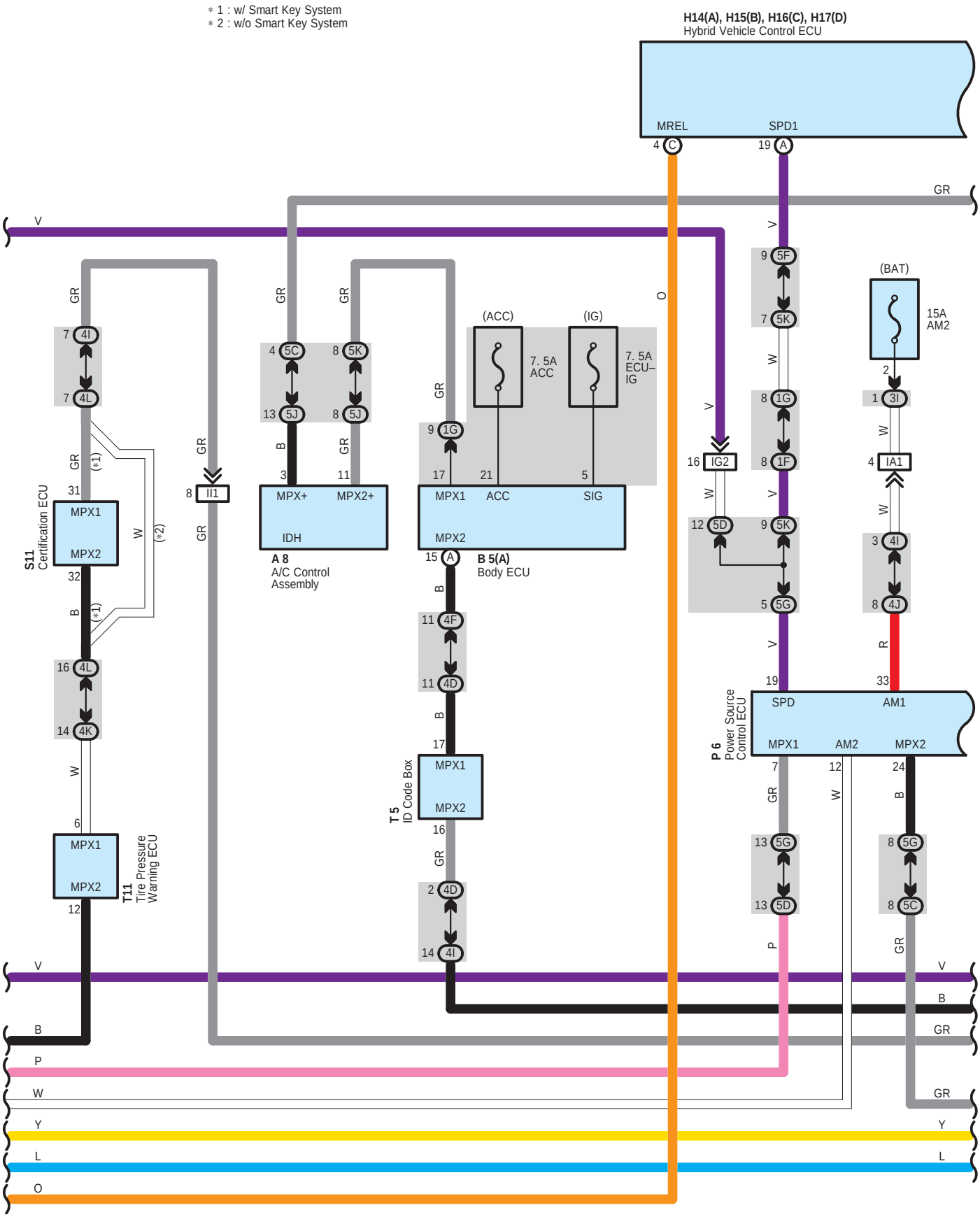
* 1 : w/ Smart Key System
* 2 : w/o Smart Key System
H14(A), H15(B), H16(C), H17(D)
Hybrid Vehicle Control ECU
MREL
SPD1
4 C
19 A
GR
V
O
(BAT)
15A
AM2
(ACC)
(IG)
7. 5A
ACC
7. 5A
ECU–
IG
S11
Certification ECU
MPX1
MPX2
IDH
MPX+
MPX2+
ACC
SIG
A 8
A/C Control
Assembly
B 5(A)
Body ECU
T5
ID Code Box
T11
Tire Pressure
Warning ECU
P 6
Power Source
Control ECU
SPD
AM1
AM2
IG2
IA1
II1
(*1)
(*2)
W
B
R
P
Y
L

Shift Control System

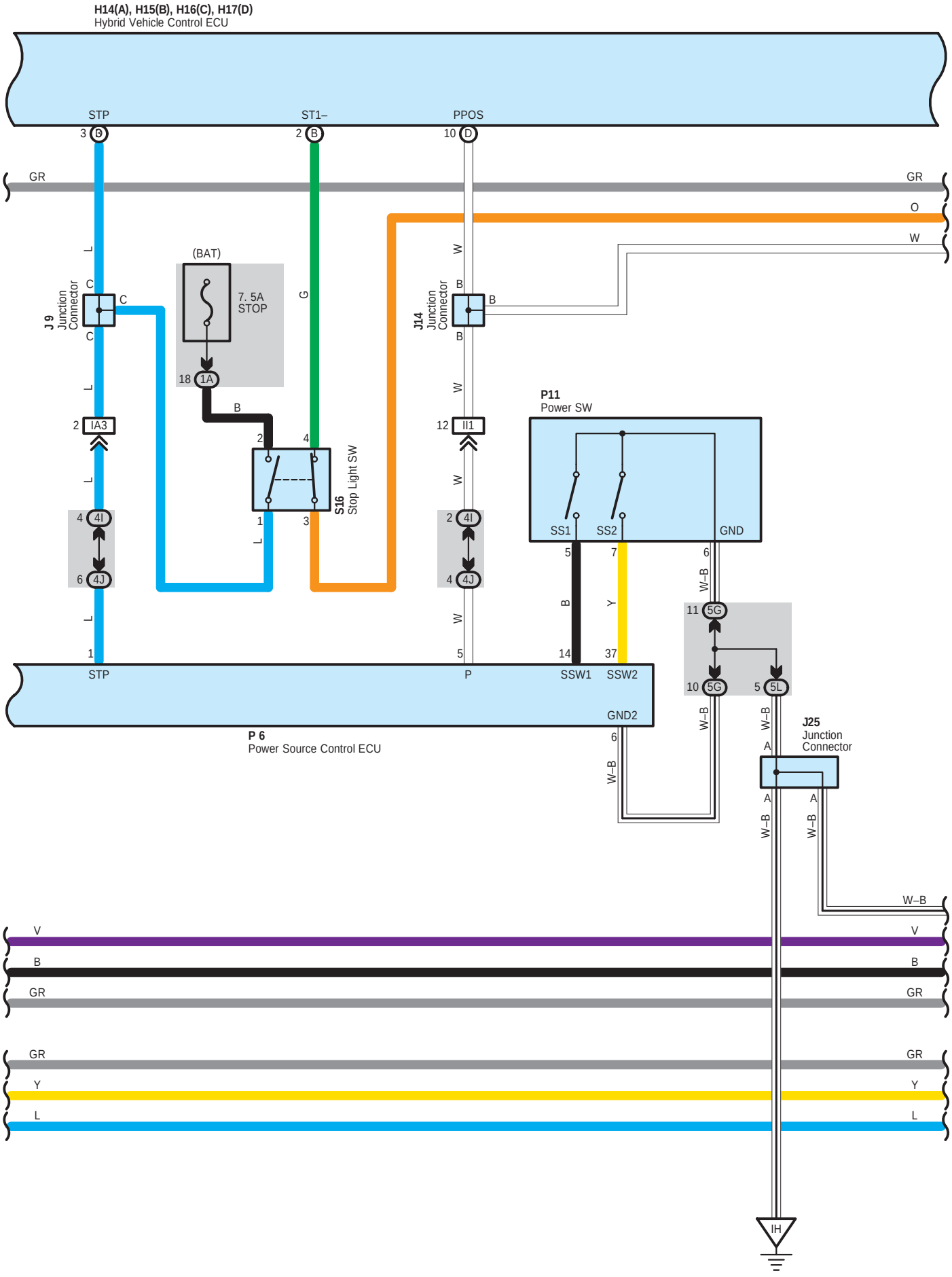

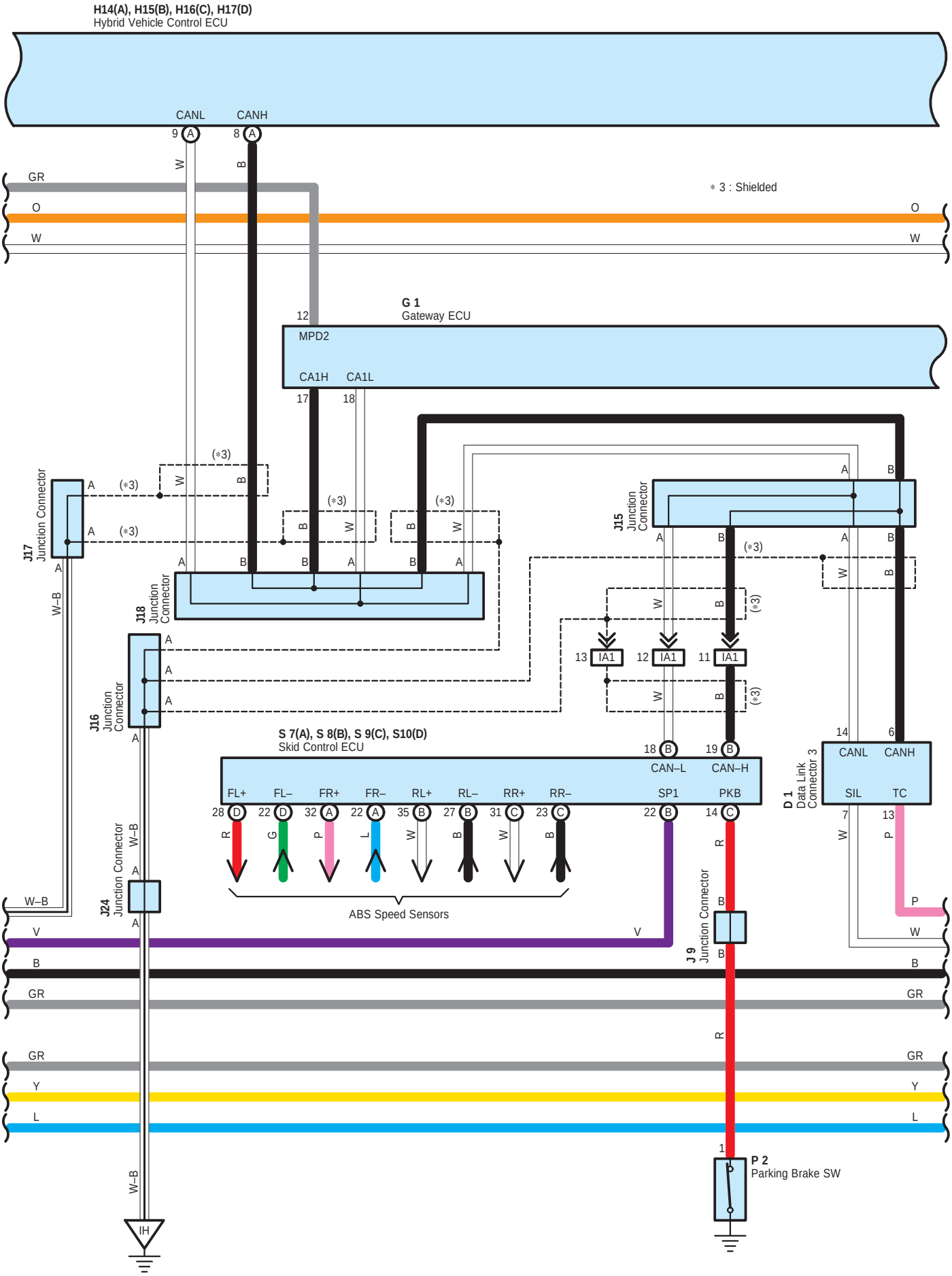
H14(A), H15(B), H16(C), H17(D)
Hybrid Vehicle Control ECU
CANL
CANH
9 A
8 A
W
B
GR
O
W
∗ 3 : Shielded
O
W
12
G 1
Gateway ECU
MPD2
CA1H
CA1L
17
18
(∗3)
J17
Junction Connector
J18
Junction Connector
J15
Junction Connector
J16
Junction Connector
J24
Junction Connector
J 9
Junction Connector
W–B
IA1
13 IA1
12 IA1
11 IA1
S 7(A), S 8(B), S 9(C), S10(D)
Skid Control ECU
18 B
19 B
CAN–L
CAN–H
FL+
FL–
FR+
FR–
RL+
RL–
RR+
RR–
SP1
PKB
28 D
22 D
32 A
22 A
35 B
27 B
31 C
23 C
22 B
14 C
R
G
P
L
W
B
ABS Speed Sensors
V
D 1
Data Link Connector 3
14
6
CANL
CANH
SIL
TC
7
13
P
GR
Y
L
1
P 2
Parking Brake SW
IH

Shift Control System

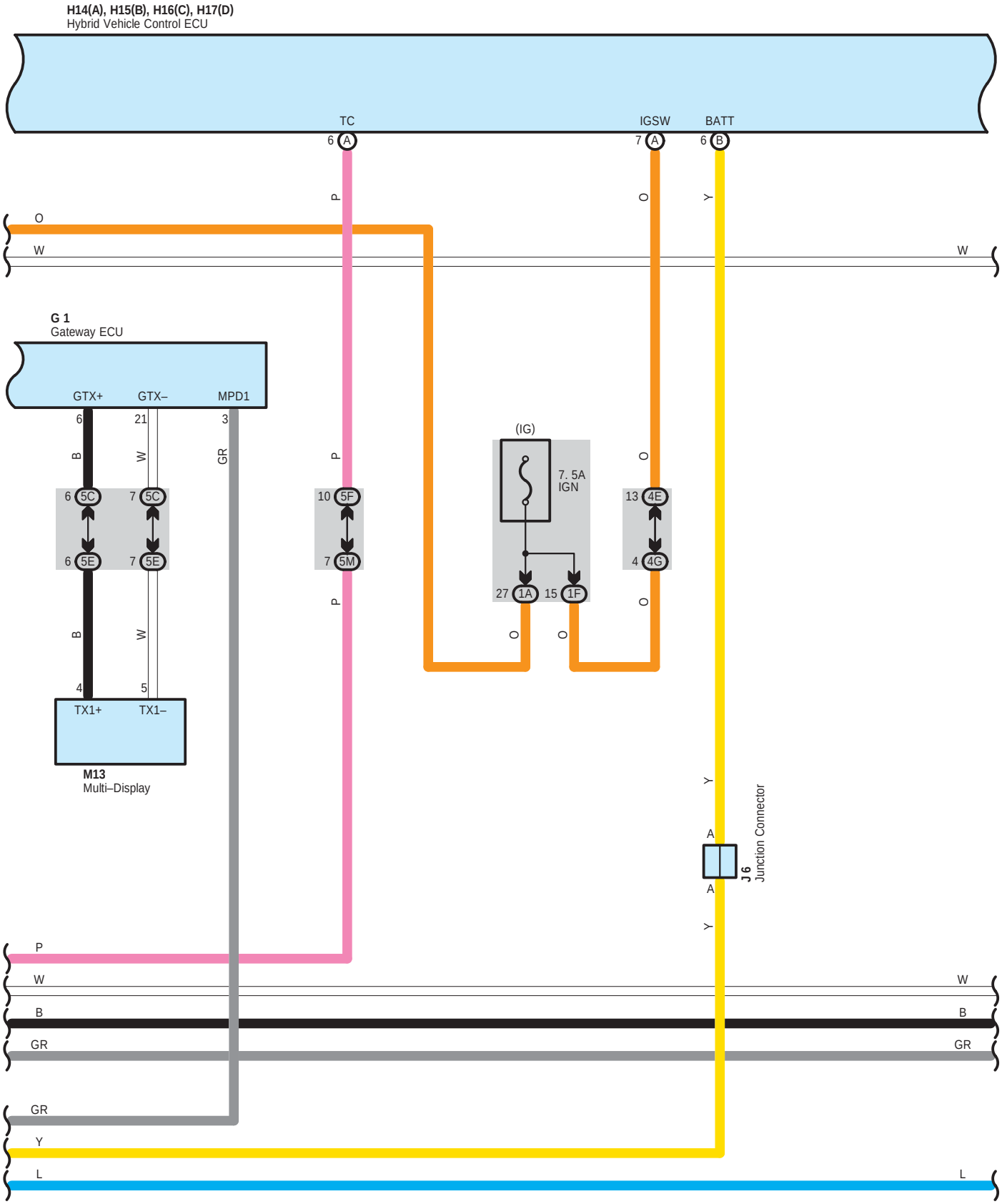

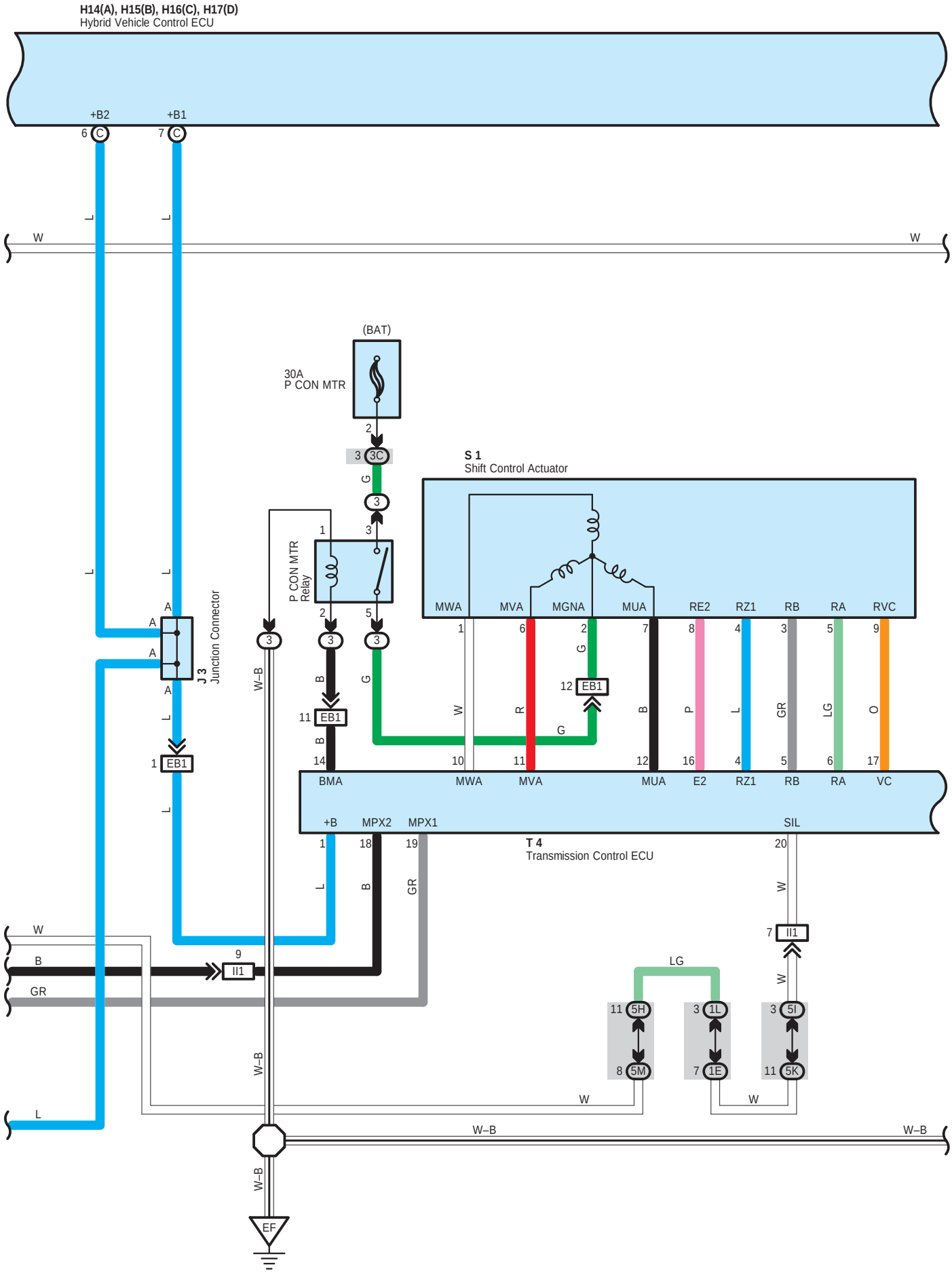
H14(A), H15(B), H16(C), H17(D)
Hybrid Vehicle Control ECU
+B2
+B1
6 C
7 C
W
W
(BAT)
30A
P CON MTR
2
3 3C
G
3
1
3
P CON MTR
Relay
2
5
3
3
3
S 1
Shift Control Actuator
MWA
MVA
MGNA
MUA
RE2
RZ1
RB
RA
RVC
1
6
2
7
8
4
3
5
9
W
R
G
B
P
L
GR
LG
O
12 EB1
11 EB1
1 EB1
A
A
A
A
J 3
Junction Connector
W–B
14
10
11
12
16
4
5
6
17
BMA
MWA
MVA
MUA
E2
RZ1
RB
RA
VC
+B
MPX2
MPX1
SIL
1
18
19
20
T 4
Transmission Control ECU
L
B
GR
W
7 II1
9
II1
LG
W
11 5H
8 5M
3 1L
7 1E
3 5I
11 5K
W
W
L
W–B
W–B
W–B
EF

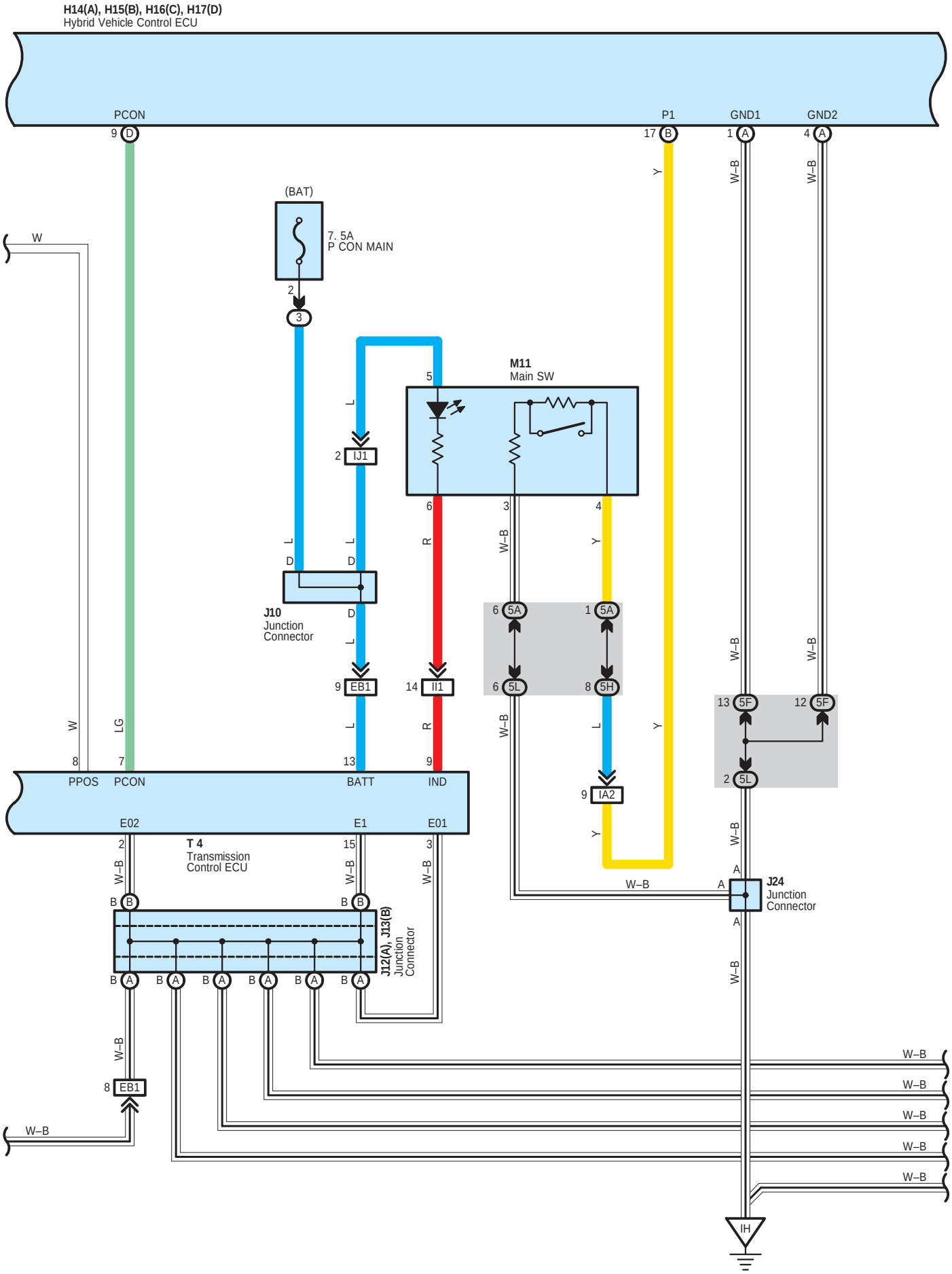
H14(A), H15(B), H16(C), H17(D)
Hybrid Vehicle Control ECU
PCON
P1
GND1
GND2
(BAT)
7. 5A
P CON MAIN
M11
Main SW
J10
Junction
Connector
T 4
Transmission
Control ECU
J12(A), J13(B)
Junction
Connector
J24
Junction
Connector
PPOS
PCON
BATT
IND
E02
E1
E01
IJ1
EB1
II1
IA2
5A
5L
5H
5F
IH
W
LG
L
R
Y
W–B

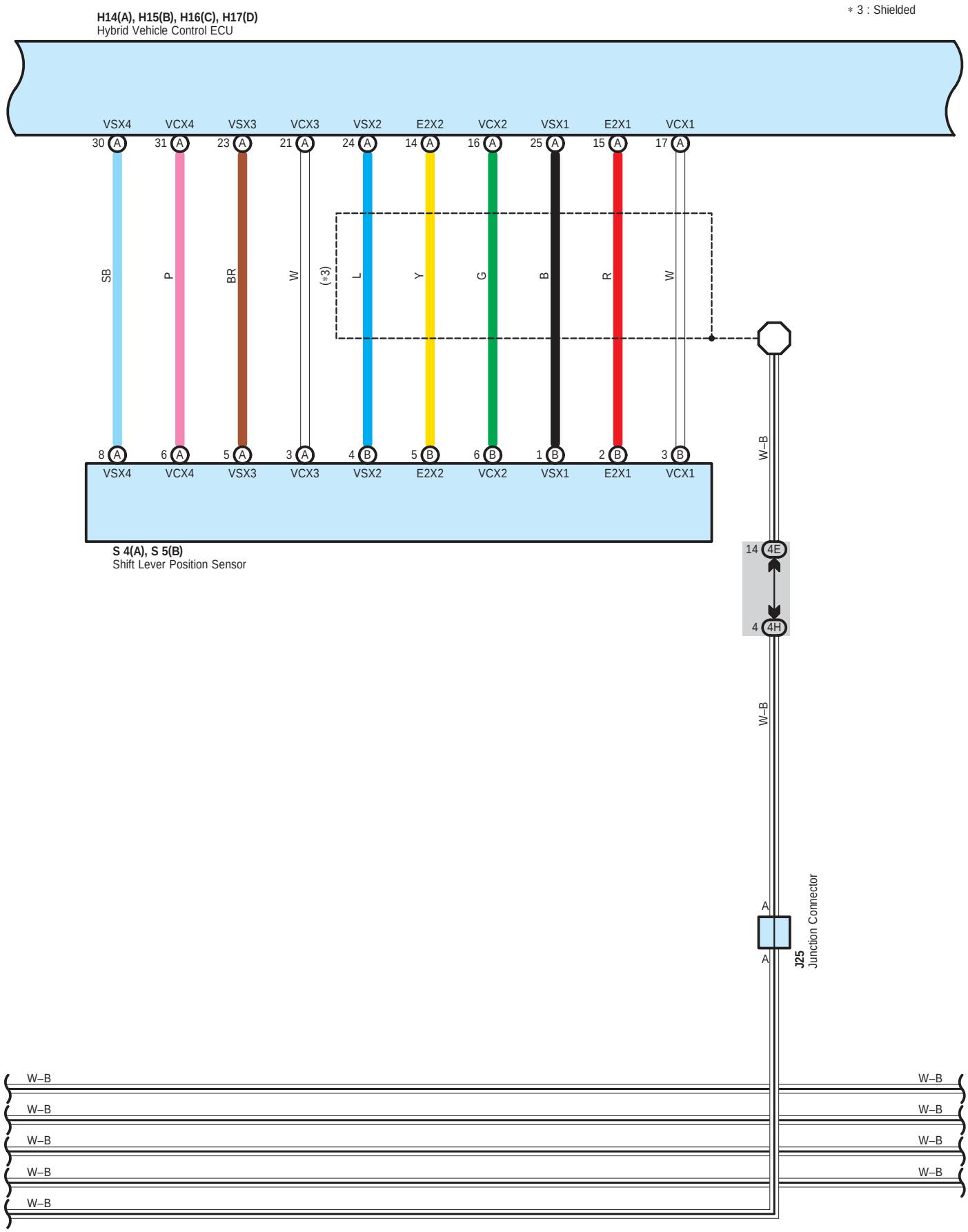
∗ 3 : Shielded
H14(A), H15(B), H16(C), H17(D)
Hybrid Vehicle Control ECU
VSX4 VCX4 VSX3 VCX3 VSX2 E2X2 VCX2 VSX1 E2X1 VCX1
30 31 23 21 24 14 16 25 15 17
SB P BR W (∗3) L Y G B R W
8 6 5 3 4 5 6 1 2 3
VSX4 VCX4 VSX3 VCX3 VSX2 E2X2 VCX2 VSX1 E2X1 VCX1
S 4(A), S 5(B)
Shift Lever Position Sensor
W–B
14 4E
4 4H
W–B
A
A
J25
Junction Connector
W–B
W–B
W–B
W–B
W–B
W–B
W–B
W–B
W–B
W–B

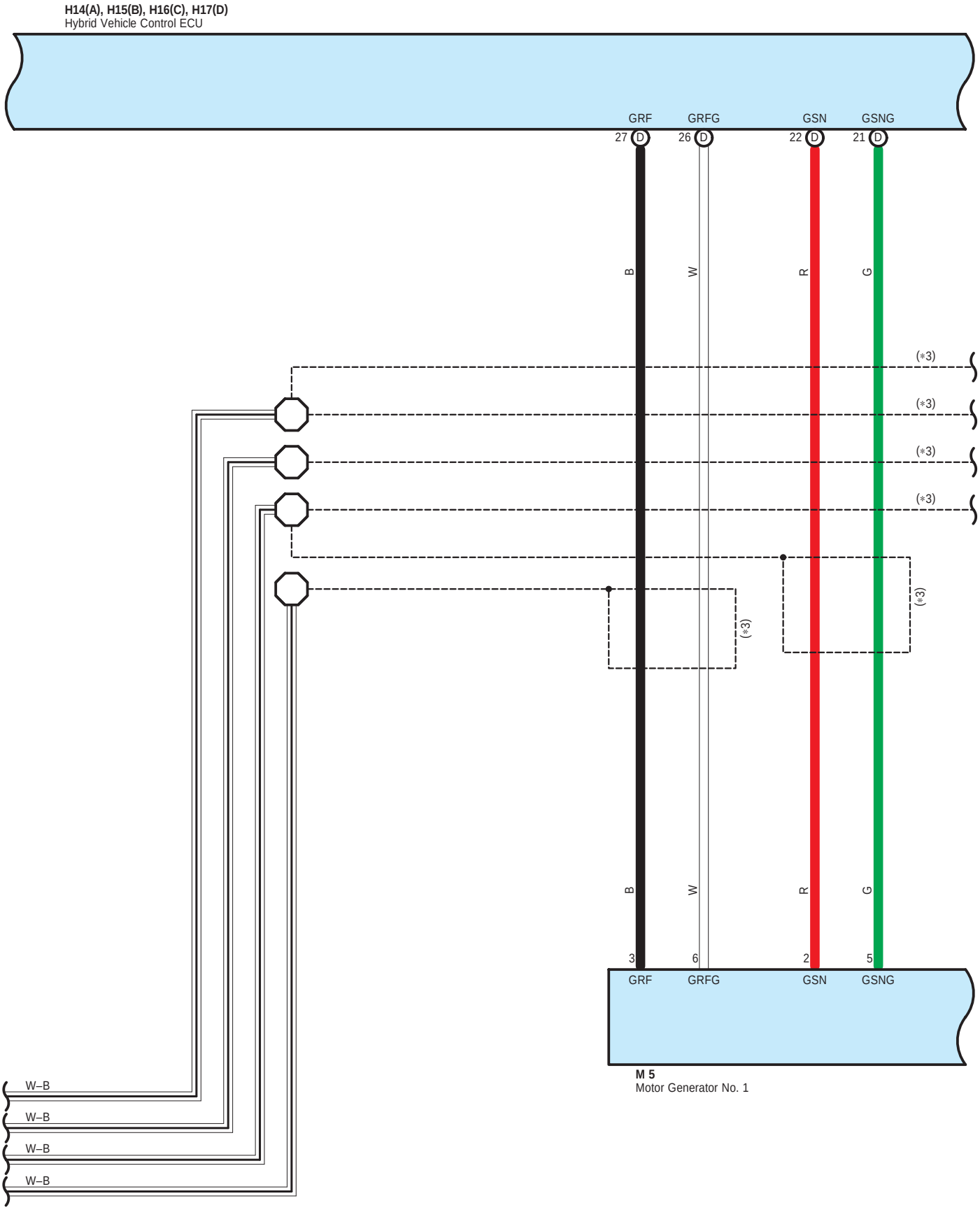
H14(A), H15(B), H16(C), H17(D)
Hybrid Vehicle Control ECU
GRF
GRFG
GSN
GSNG
27 D
26 D
22 D
21 D
B
W
R
G
(*3)
(*3)
(*3)
(*3)
(*3)
(*3)
B
W
R
G
3
6
2
5
GRF
GRFG
GSN
GSNG
M 5
Motor Generator No. 1
W–B
W–B
W–B
W–B

＊3 : Shielded

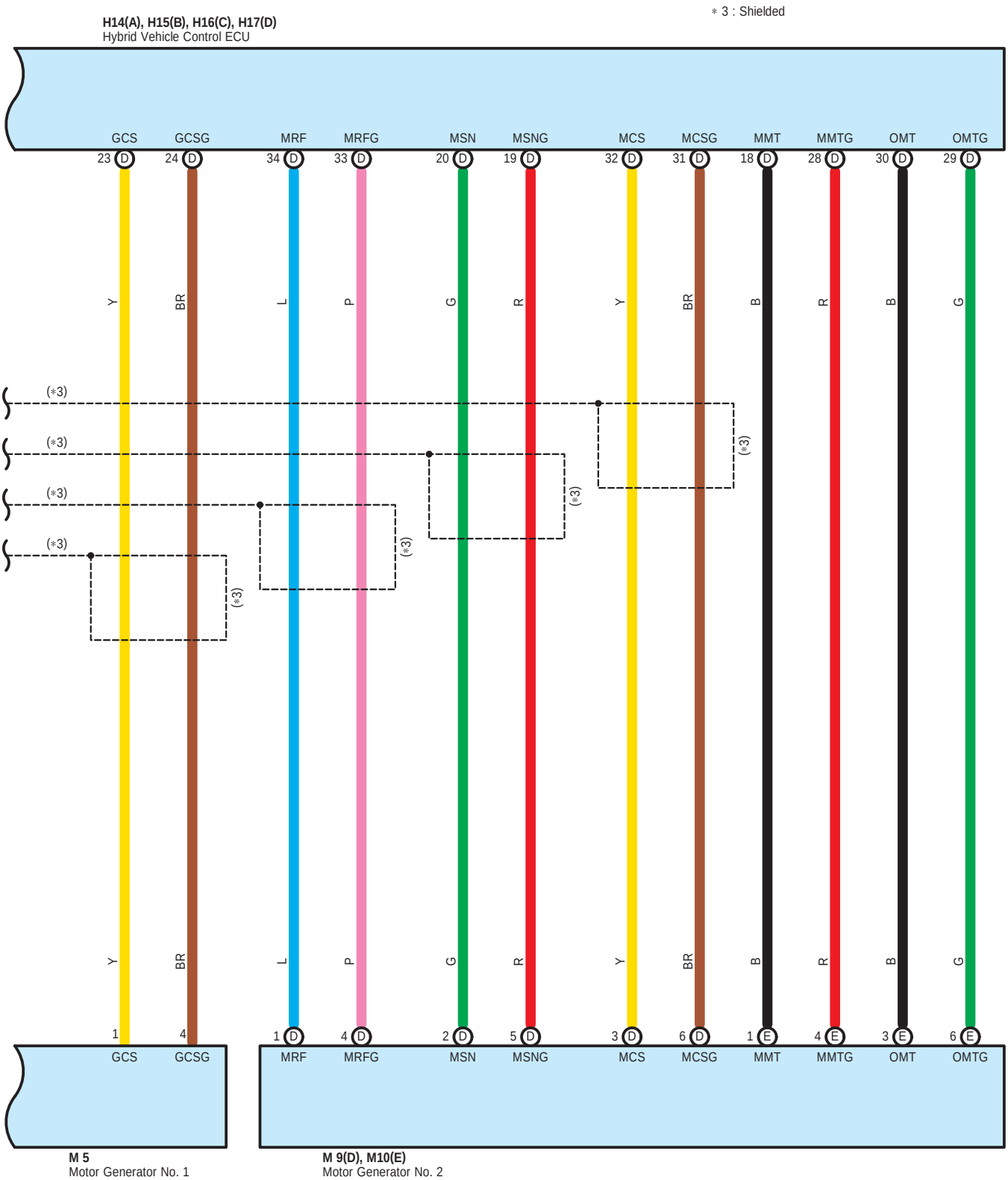
H14(A), H15(B), H16(C), H17(D)
Hybrid Vehicle Control ECU
GCS
GCSG
MRF
MRFG
MSN
MSNG
MCS
MCSG
MMT
MMTG
OMT
OMTG
23 D
24 D
34 D
33 D
20 D
19 D
32 D
31 D
18 D
28 D
30 D
29 D
Y
BR
L
P
G
R
Y
BR
B
R
B
G
(＊3)
1
4
1 D
4 D
2 D
5 D
3 D
6 D
1 E
4 E
3 E
6 E
M 5
Motor Generator No. 1
M 9(D), M10(E)
Motor Generator No. 2

Shift Control System

System Outline

Under this system, operating signal of shift lever is sent to hybrid vehicle control ECU to control hybrid motor, which changes shift positions (R, N, D, B) electrically. When shift is put in P position, transmission control ECU receives operating signal from hybrid vehicle control ECU and activates parking lock electrically.

1. Shift Range Change Function

Gear can be shifted to any shift range under condition when vehicle can drive except when reject function is in operation.
When vehicle cannot drive with power SW at IG ON position, gear can be shifted only to P and N position.
When vehicle cannot drive with power SW at ACC ON position, gear can be shifted only to P position.
When power SW is at OFF position, gear cannot be shifted to any position.
When main SW is operated at vehicle stop after starting hybrid system, gear is automatically changed to P position from any other gear position and turns off power supply.

2. Reject Function

Changing gear may not effect to change position under certain vehicle condition. Under such condition, warning buzzer of combination meter sounds to show the rejection and call for driver's attention. Followings are shift operations and shift position conditions under which reject function is activated.

* When gear is shifted from P position to other position without applying brake pedal, gear stays in P position.
* Main SW cannot put gear in P position during driving but changes to N position.
* Shift change to forward or backward during driving changes gear to N position.
* When gear is changed from other position than D position to B position, gear is changed to N position automatically.

3. Combination Meter Indication

The combination meter shows present shift position. Other shift positions than D or B position are not shown in lighting in the combination meter. This is to avoid unnecessary shifting operation to B position from other shift position except D position.

4. Operation of Parking Lock

Operation signal from/to P position is sent from main SW or power SW to transmission control ECU through hybrid vehicle control ECU. At that time the transmission control ECU operates P CON MTR relay, activates parking lock actuator with appropriate control of electric current, and lights up main SW when shift is at P position. If the system has abnormality on parking lock operation, it tells the system abnormality to the driver by lighting up master warning light on combination meter, displaying warning of the system abnormality on the multi–display, and blinking indicator light of main SW.

5. Operation at Electric Power OFF

Under electric power OFF, transmission control ECU receives signal from power source control ECU by multi–communication, and sends shift position information to hybrid vehicle control ECU. The hybrid vehicle control ECU sends signal to power source control ECU to tell whether it is right or wrong condition to turn off electric power. Accepted conditions for electric power OFF are as follows;

* When hybrid vehicle control ECU is not sending request signal for parking lock release with shift position in P position.
* With shift position is at other position than P position, when hybrid vehicle control ECU is outputting signal that hybrid system is not running or request signal for parking lock.
* When there is abnormal motor's not running condition with paring lock in operation, and hybrid system is not running and parking brake is being applied.

○ : Parts Location

Code	See Page	Code	See Page	Code	See Page
A8	48	J13 B	50	P6	51
B5 A	48	J14	50	P11	51
C10	49	J15	50	S1	47
D1	49	J16	50	S4 A	51
G1	49	J17	50	S5 B	51
H14 A	49	J18	50	S7 A	51
H15 B	49	J24	50	S8 B	51
H16 C	49	J25	50	S9 C	51
H17 D	49	M5	47	S10 D	51
J3	47	M9 D	47	S11	51
J6	50	M10 E	47	S16	51
J9	50	M11	50	T4	51
J10	50	M13	50	T5	51
J12 A	50	P2	51	T11	51

: Relay Blocks

Code	See Page	Relay Blocks (Relay Block Location)
3	22	Engine Room R/B (Engine Compartment Left)

: Junction Block and Wire Harness Connector

Code	See Page	Junction Block and Wire Harness (Connector Location)
1A	30	Engine Room Main Wire and Driver Side J/B (Lower Finish Panel)
1E	30	Instrument Panel Wire and Driver Side J/B (Lower Finish Panel)
1F		
1G		
1L	31	
1M		
3C	23	Engine Room Main Wire and Engine Room J/B (Engine Compartment Left)
3I	24	
3J		
4C	38	Instrument Panel Wire and Center Connector No.1 (Behind the Combination Meter)
4D		
4E		
4F		
4G		
4H		
4I		
4J		
4K		
4L		
5A	42	Instrument Panel Wire and Center Connector No.2 (Instrument Panel Brace RH)
5C		
5D		
5E		
5F		
5G		
5H		
5I		
5J		
5K		
5L		
5M		

: Connector Joining Wire Harness and Wire Harness

Code	See Page	Joining Wire Harness and Wire Harness (Connector Location)
EB1	56	Engine Wire and Engine Room Main Wire (Inside of the Engine Room R/B)
IA1	58	Engine Room Main Wire and Instrument Panel Wire (Upper Parts of Front Body Pillar LH)
IA2		
IA3		
IG1	59	Instrument Panel Wire and Instrument Panel No.2 Wire (Behind the Combination Meter)
IG2		
II1	59	Engine Wire and Instrument Panel Wire (Behind the Glove Box)
IJ1	59	Engine Room Main Wire and Instrument Panel Wire (Behind the Glove Box)

▽ : **Ground Points**

Code	See Page	Ground Points Location
EE	56	Left Side of the Suspension Tower
EF		
IH	58	Cowl Side Panel LH
II	58	Instrument Panel Brace LH

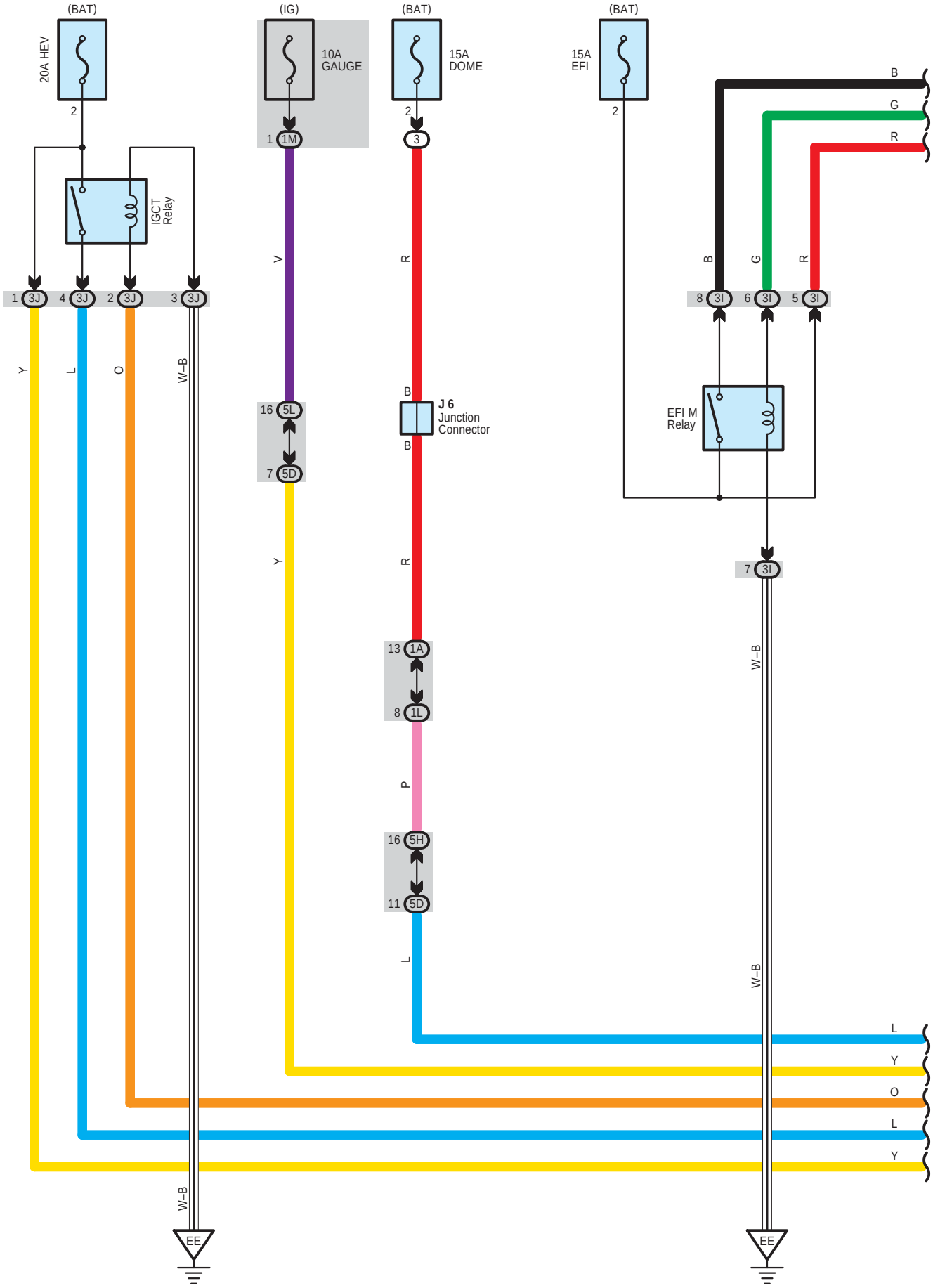
(BAT)
20A HEV
2
IGCT Relay
1 3J
4 3J
2 3J
3 3J
Y
L
O
W–B
W–B
EE
(IG)
10A GAUGE
1 1M
V
16 5L
7 5D
Y
(BAT)
15A DOME
2
3
R
B
J 6 Junction Connector
B
R
13 1A
8 1L
P
16 5H
11 5D
L
(BAT)
15A EFI
2
B
G
R
B
G
R
8 3I
6 3I
5 3I
EFI M Relay
7 3I
W–B
W–B
EE
L
Y
O
L
Y

∗1 : Shielded

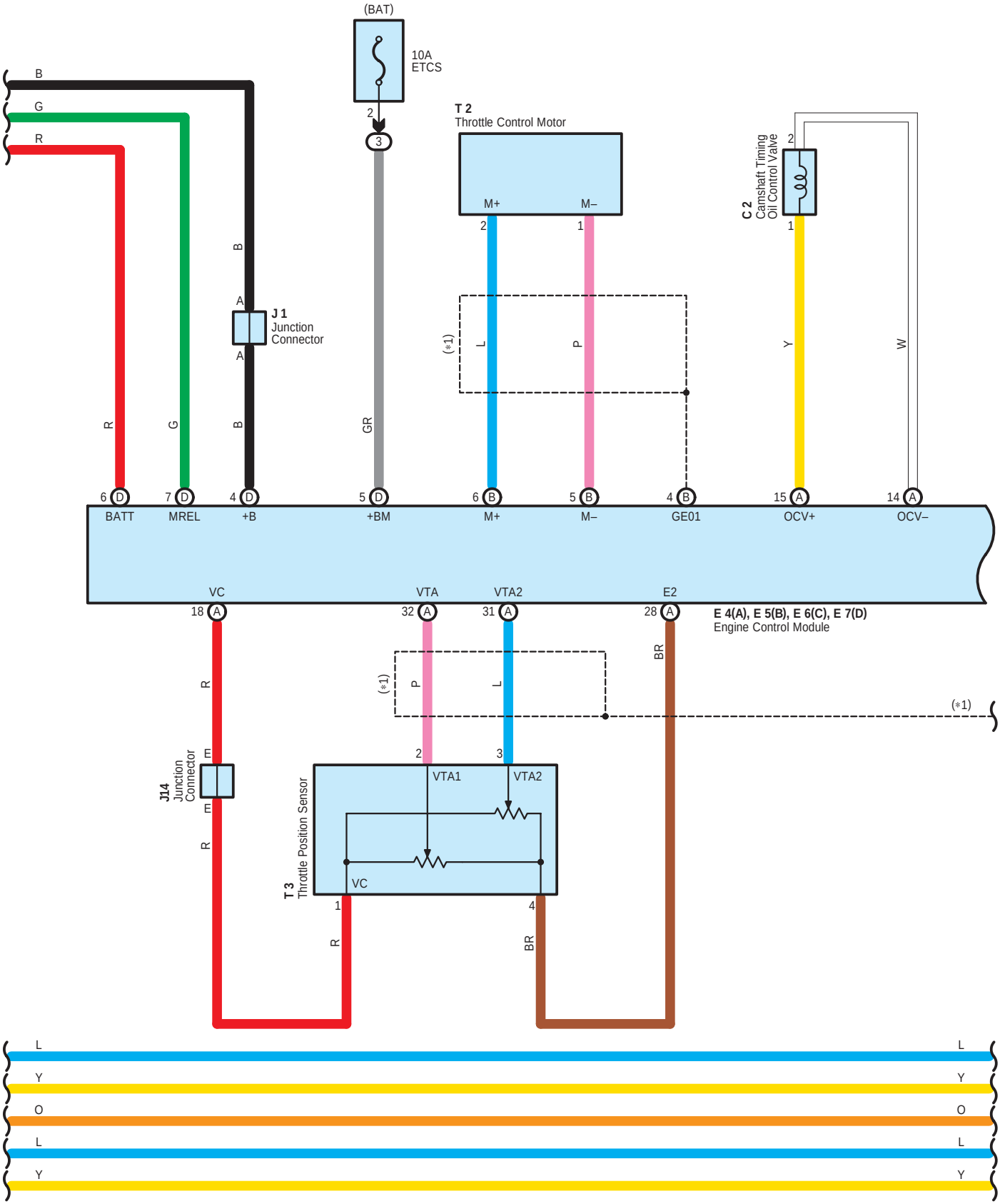
(BAT)
10A
ETCS
T 2
Throttle Control Motor
M+
M–
C 2
Camshaft Timing
Oil Control Valve
J 1
Junction
Connector
(∗1)
BATT
MREL
+B
+BM
M+
M–
GE01
OCV+
OCV–
VC
VTA
VTA2
E2
E 4(A), E 5(B), E 6(C), E 7(D)
Engine Control Module
J14
Junction
Connector
T 3
Throttle Position Sensor
VTA1
VTA2
VC

＊1 : Shielded

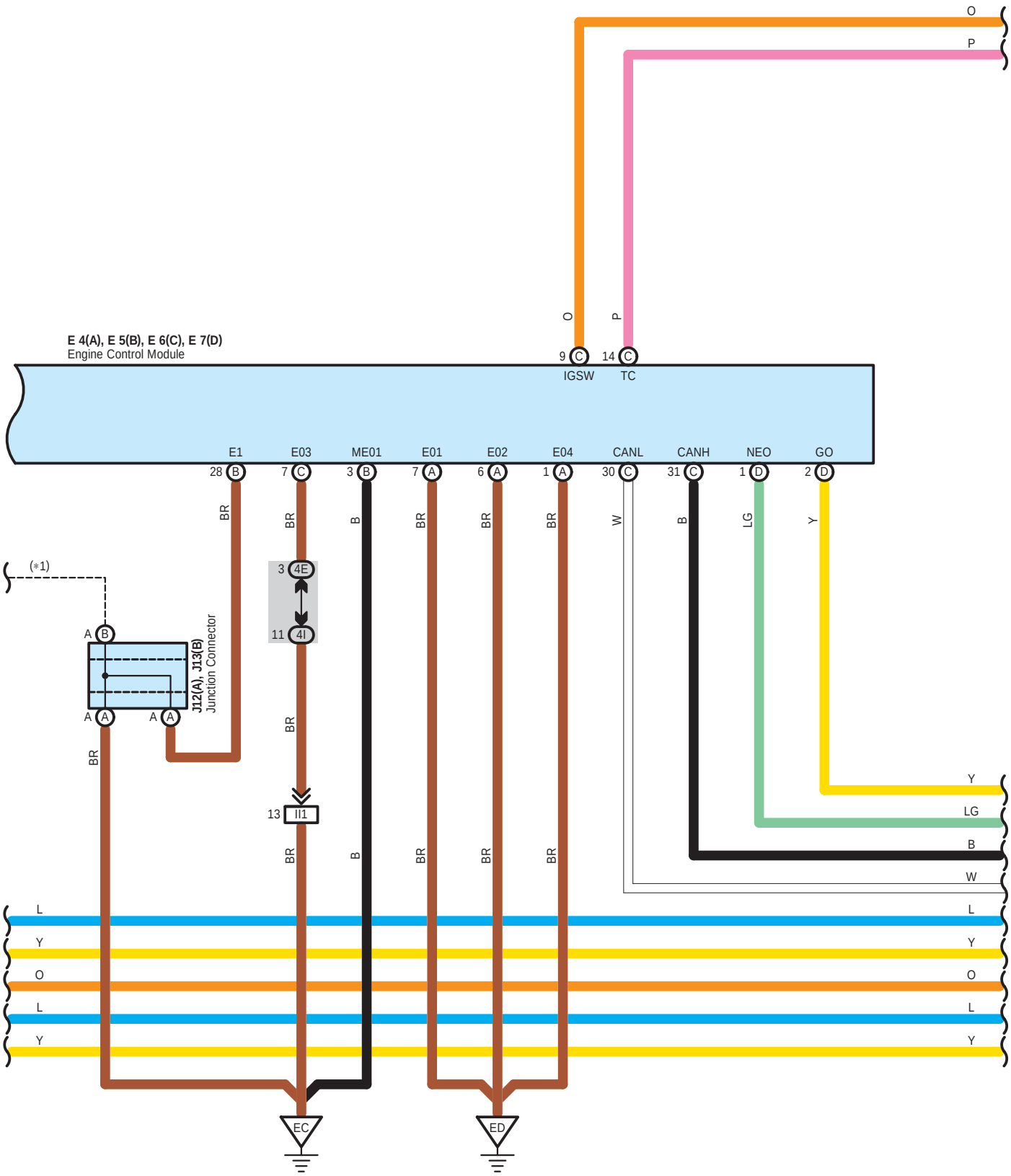
O
P
O
P
E 4(A), E 5(B), E 6(C), E 7(D)
Engine Control Module
9 C IGSW
14 C TC
E1
E03
ME01
E01
E02
E04
CANL
CANH
NEO
GO
28 B
7 C
3 B
7 A
6 A
1 A
30 C
31 C
1 D
2 D
BR
BR
B
BR
BR
BR
W
B
LG
Y
(*1)
A B
A A
A A
J12(A), J13(B)
Junction Connector
3 4E
11 4I
13 I1
BR
BR
B
BR
BR
BR
Y
LG
B
W
L
Y
O
L
Y
L
Y
O
L
Y
EC
ED

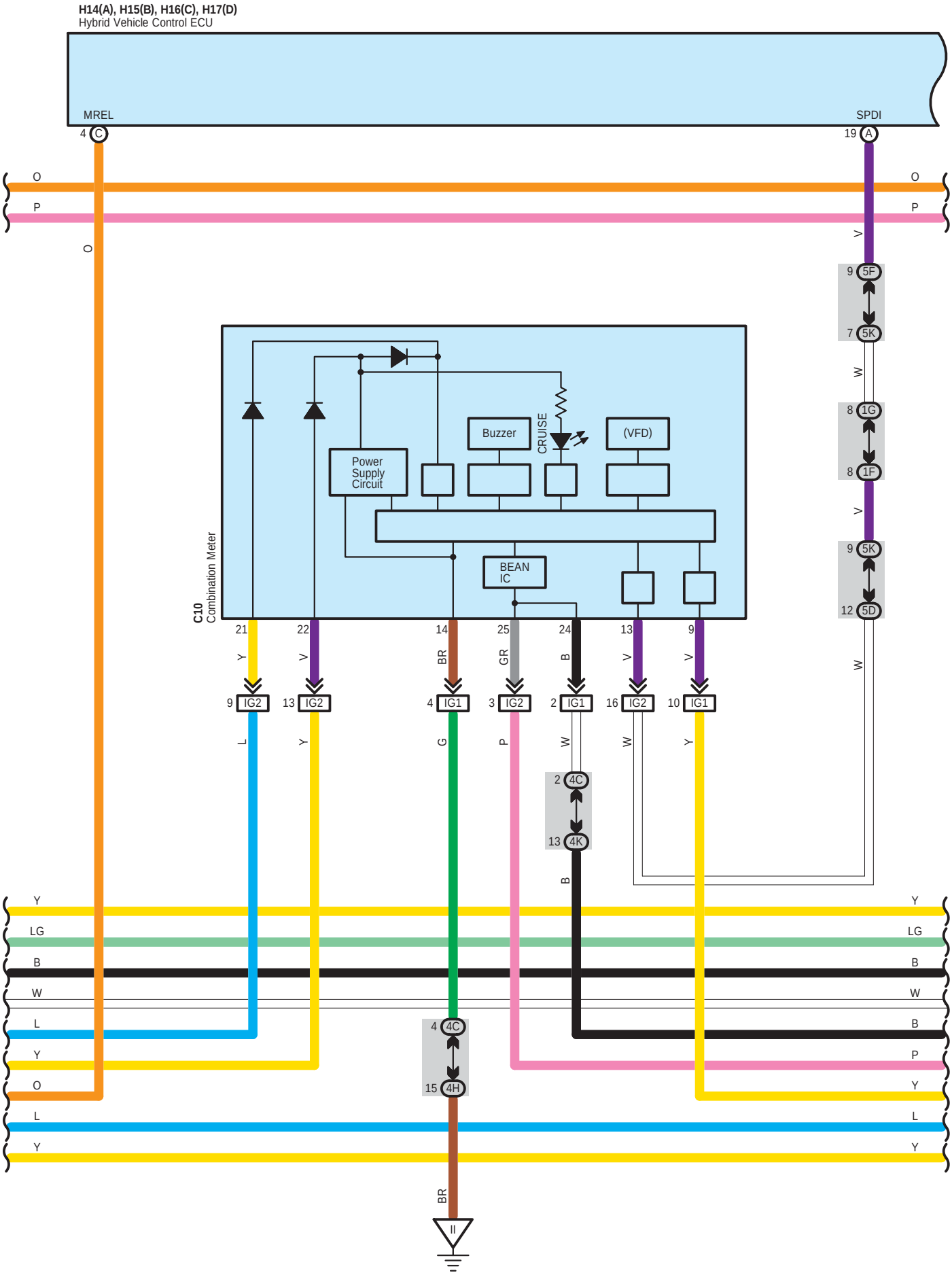
H14(A), H15(B), H16(C), H17(D)
Hybrid Vehicle Control ECU
MREL
4 C
SPDI
19 A
O
P
O
P
O
V
9 5F
7 5K
W
8 1G
8 1F
V
9 5K
12 5D
W
C10
Combination Meter
Power Supply Circuit
Buzzer
CRUISE
(VFD)
BEAN IC
21
22
14
25
24
13
9
Y
V
BR
GR
B
V
V
9 IG2
13 IG2
4 IG1
3 IG2
2 IG1
16 IG2
10 IG1
L
Y
G
P
W
W
Y
2 4C
13 4K
B
Y
LG
B
W
L
Y
O
L
Y
BR
4 4C
15 4H
Y
LG
B
W
B
P
Y
L
Y

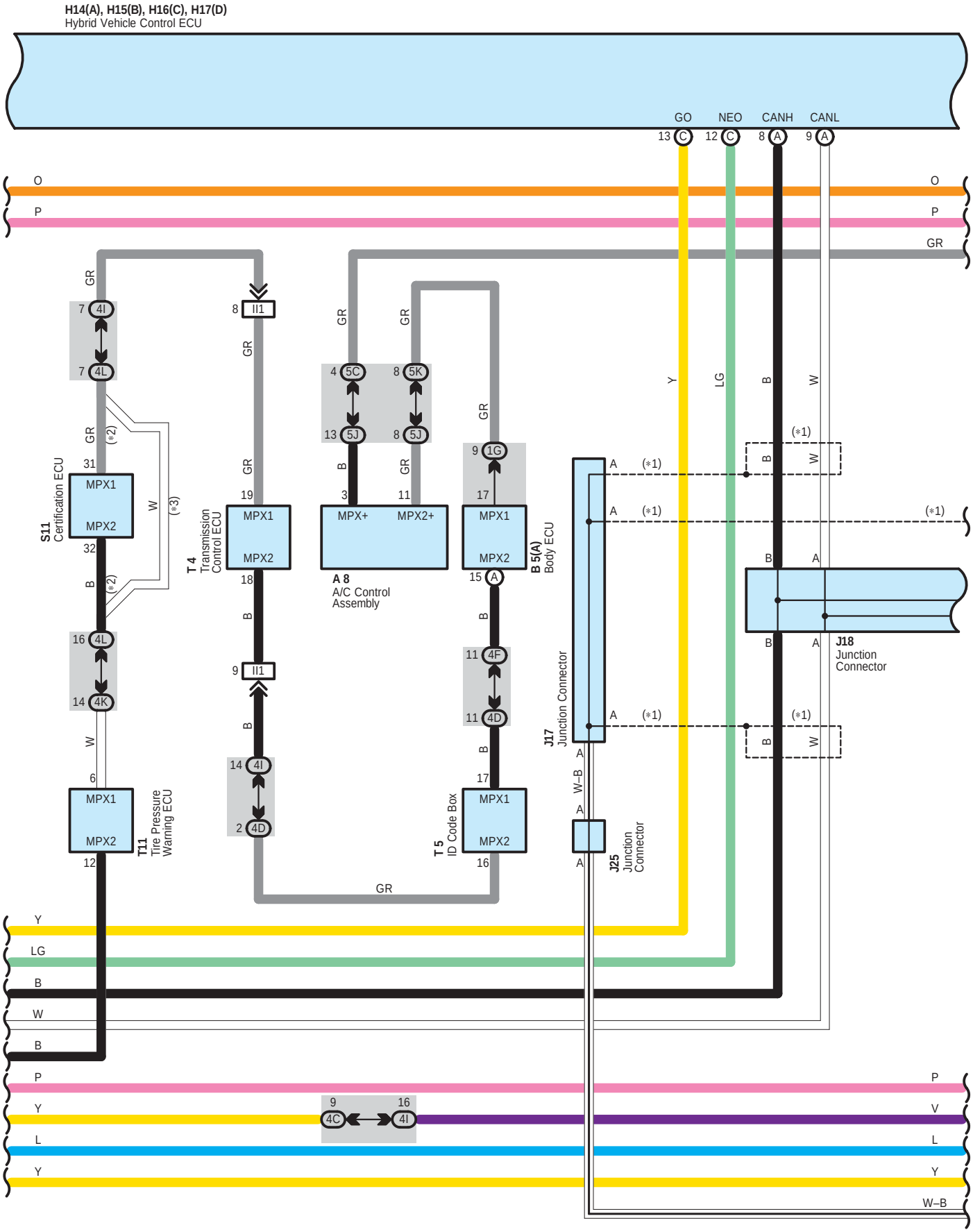
H14(A), H15(B), H16(C), H17(D)
Hybrid Vehicle Control ECU
GO
NEO
CANH
CANL
13 C
12 C
8 A
9 A
S11
Certification ECU
MPX1
MPX2
T 4
Transmission Control ECU
A 8
A/C Control Assembly
MPX+
MPX2+
B 5(A)
Body ECU
T11
Tire Pressure Warning ECU
T 5
ID Code Box
J17
Junction Connector
J25
Junction Connector
J18
Junction Connector
(*1)
(*2)
(*3)
O
P
GR
Y
LG
B
W
W–B
V
L

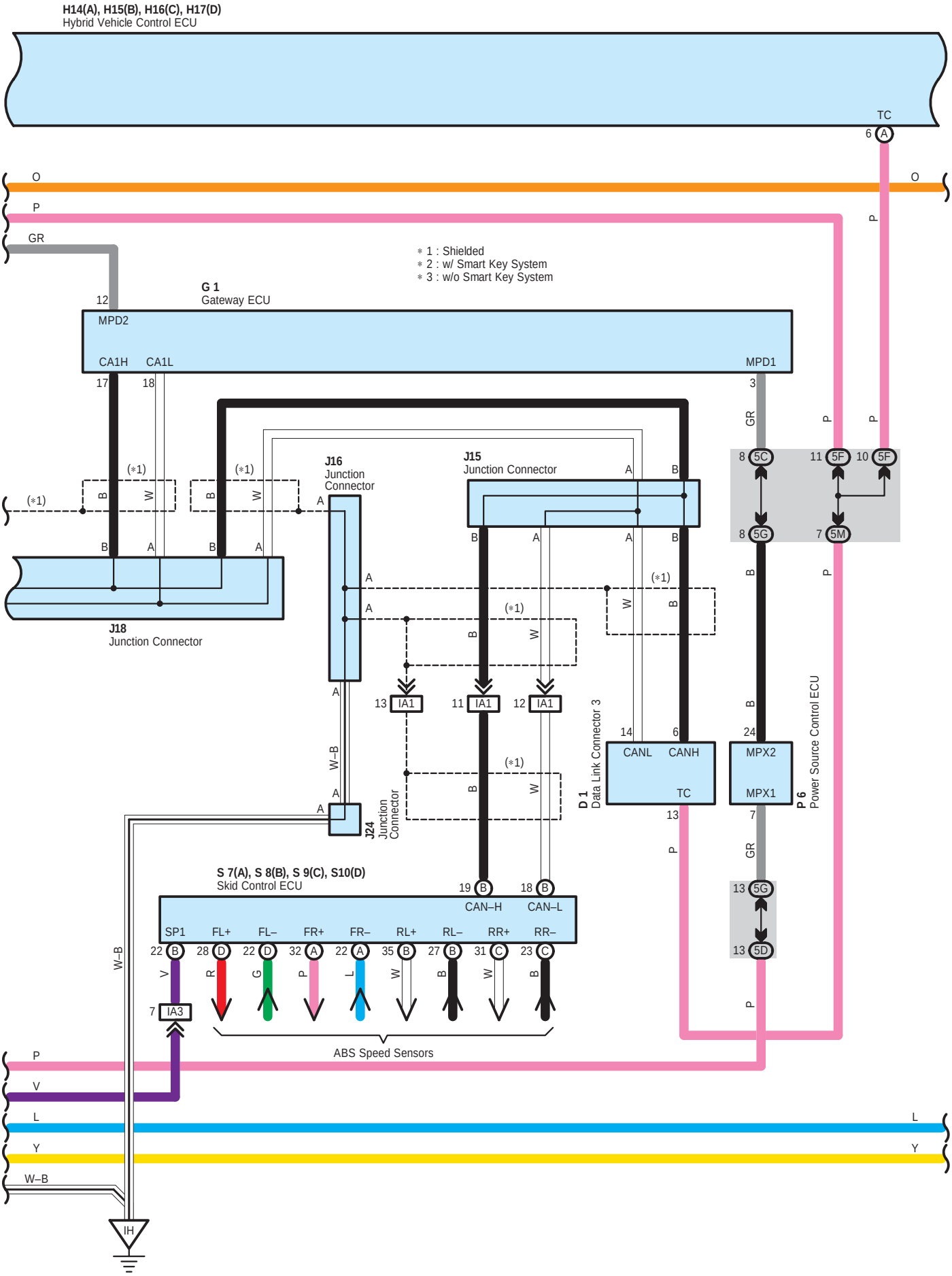
H14(A), H15(B), H16(C), H17(D)
Hybrid Vehicle Control ECU
TC
6 A
O
O
P
P
GR
∗1 : Shielded
∗2 : w/ Smart Key System
∗3 : w/o Smart Key System
G 1
Gateway ECU
12
MPD2
CA1H
CA1L
MPD1
17
18
3
GR
P
P
8 5C
11 5F
10 5F
8 5G
7 5M
(∗1)
J16
Junction Connector
J15
Junction Connector
J18
Junction Connector
W–B
J24
Junction Connector
13 IA1
11 IA1
12 IA1
D 1
Data Link Connector 3
CANL
CANH
TC
14
6
13
MPX2
MPX1
24
7
P 6
Power Source Control ECU
S 7(A), S 8(B), S 9(C), S10(D)
Skid Control ECU
19 B
18 B
CAN–H
CAN–L
SP1
FL+
FL–
FR+
FR–
RL+
RL–
RR+
RR–
22 B
28 D
22 D
32 A
22 A
35 B
27 B
31 C
23 C
7 IA3
13 5G
13 5D
ABS Speed Sensors
P
V
L
Y
W–B
IH

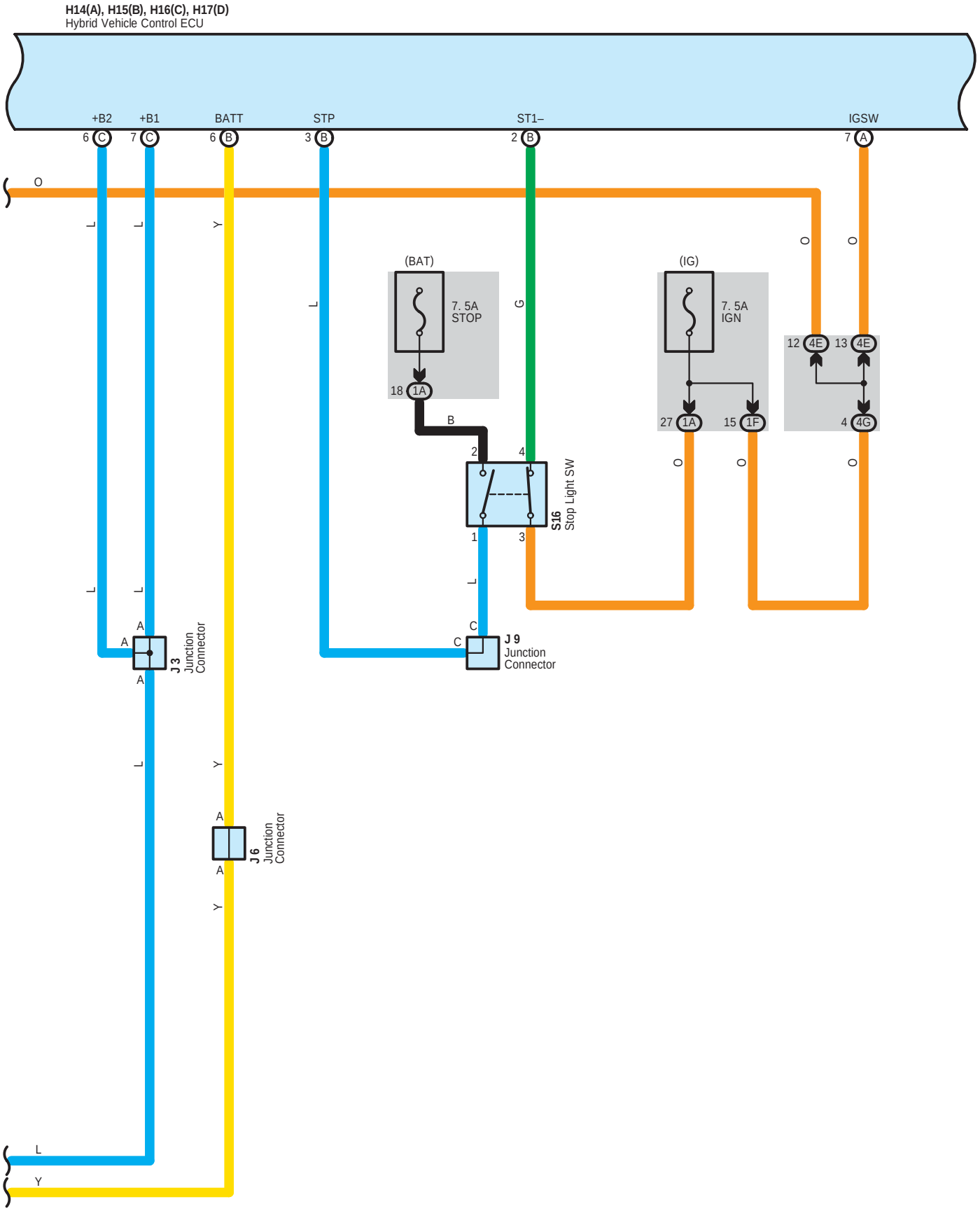
H14(A), H15(B), H16(C), H17(D)
Hybrid Vehicle Control ECU
+B2
+B1
BATT
STP
ST1–
IGSW
6 C
7 C
6 B
3 B
2 B
7 A
O
L
Y
G
(BAT)
7. 5A
STOP
18 1A
B
(IG)
7. 5A
IGN
27 1A
15 1F
12 4E
13 4E
4 4G
2
4
1
3
S16
Stop Light SW
A
J 3
Junction
Connector
C
J 9
Junction
Connector
J 6
Junction
Connector

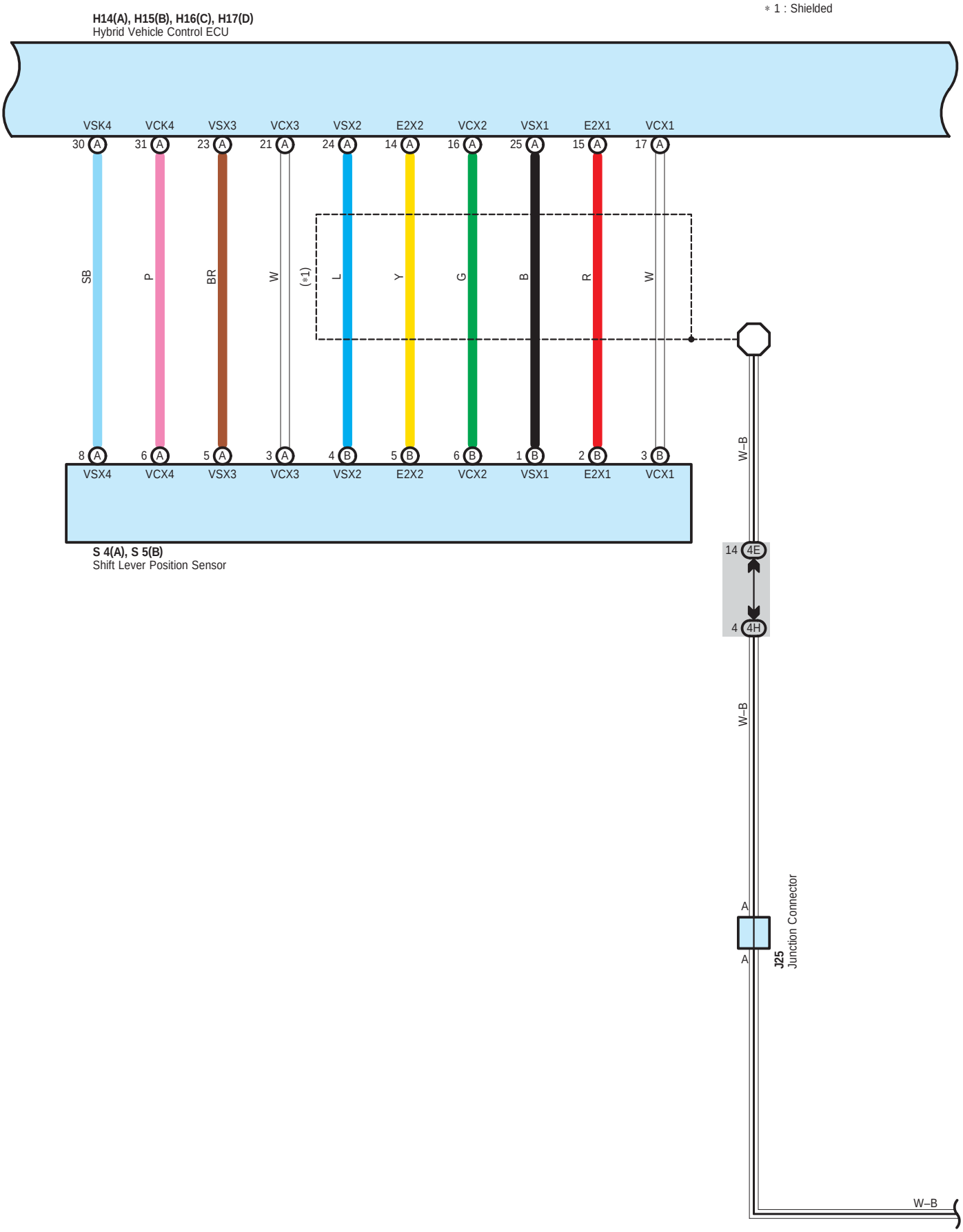
∗1 : Shielded
H14(A), H15(B), H16(C), H17(D)
Hybrid Vehicle Control ECU
VSK4
VCK4
VSX3
VCX3
VSX2
E2X2
VCX2
VSX1
E2X1
VCX1
30 A
31 A
23 A
21 A
24 A
14 A
16 A
25 A
15 A
17 A
SB
P
BR
W
(∗1)
L
Y
G
B
R
W
8 A
6 A
5 A
3 A
4 B
5 B
6 B
1 B
2 B
3 B
VSX4
VCX4
VSX3
VCX3
VSX2
E2X2
VCX2
VSX1
E2X1
VCX1
S 4(A), S 5(B)
Shift Lever Position Sensor
W–B
14 4E
4 4H
W–B
A
A
J25
Junction Connector
W–B

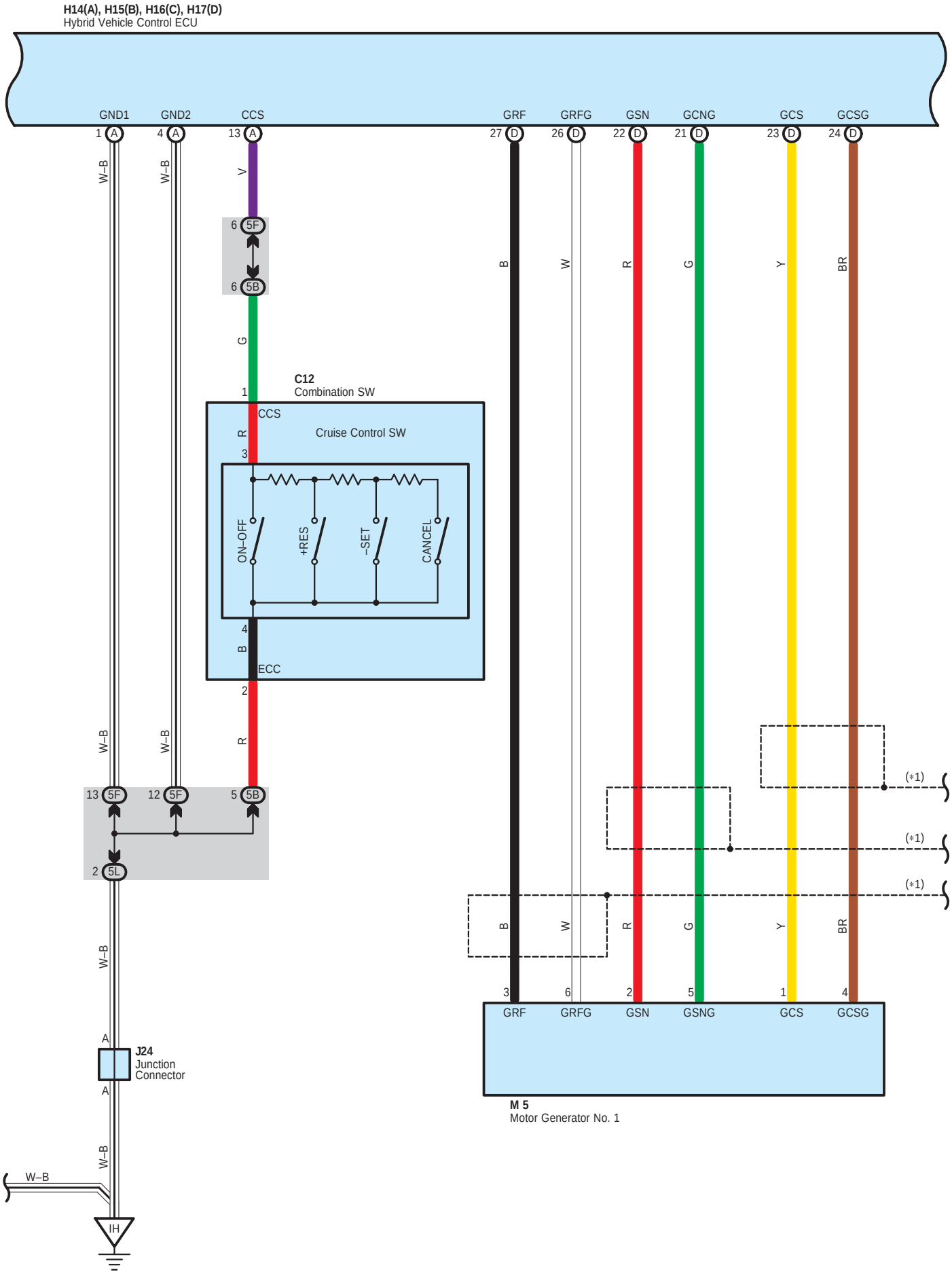
H14(A), H15(B), H16(C), H17(D)
Hybrid Vehicle Control ECU
GND1
GND2
CCS
GRF
GRFG
GSN
GCNG
GCS
GCSG
1 A
4 A
13 A
27 D
26 D
22 D
21 D
23 D
24 D
W–B
V
G
B
W
R
Y
BR
6 5F
6 5B
C12
Combination SW
1
CCS
Cruise Control SW
3
ON–OFF
+RES
–SET
CANCEL
4
B
ECC
2
13 5F
12 5F
5 5B
2 5L
(*1)
3
6
2
5
1
4
GRF
GRFG
GSN
GSNG
GCS
GCSG
M 5
Motor Generator No. 1
A
J24
Junction
Connector
A
IH

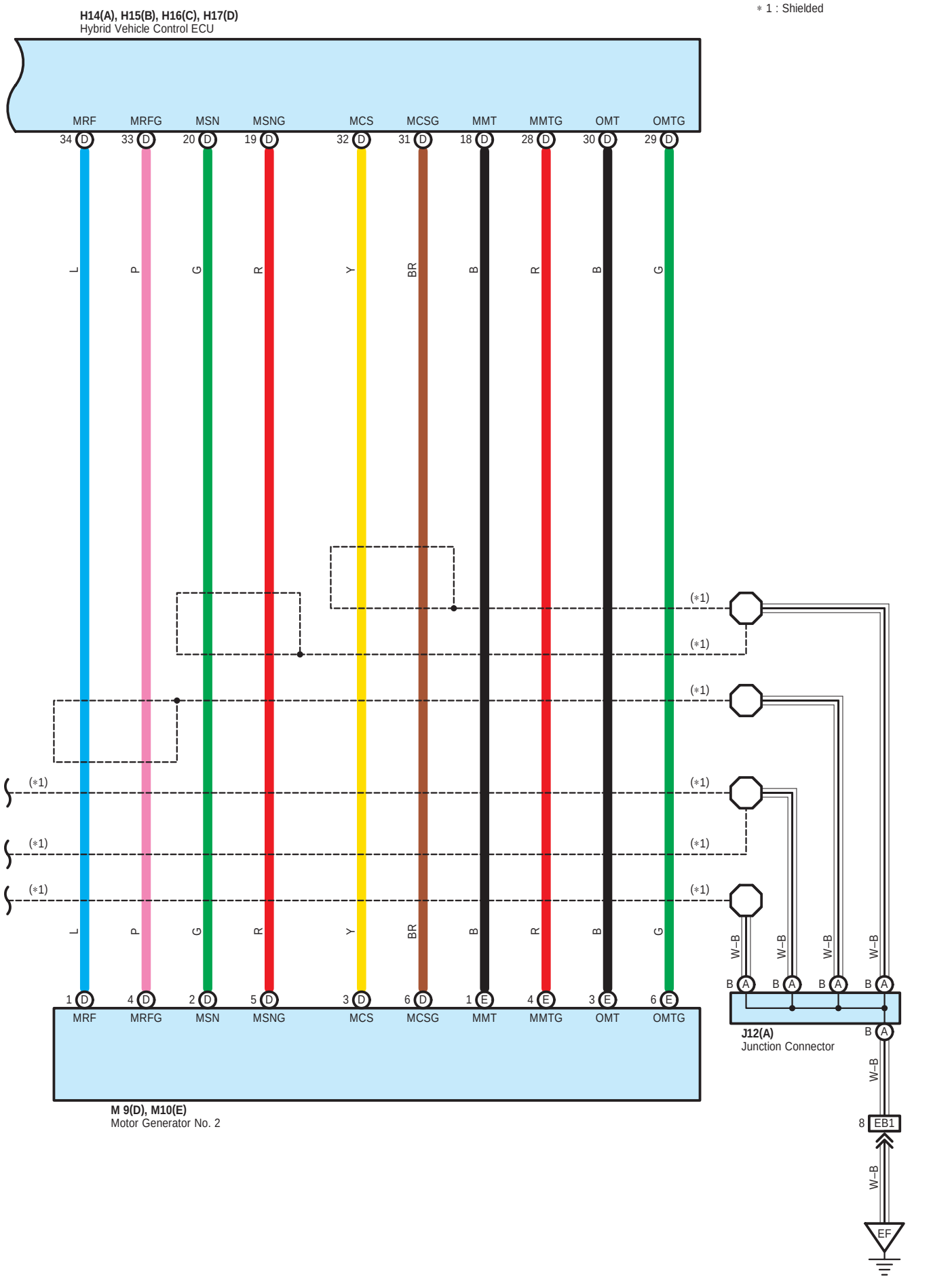
∗1 : Shielded
H14(A), H15(B), H16(C), H17(D)
Hybrid Vehicle Control ECU
MRF
MRFG
MSN
MSNG
MCS
MCSG
MMT
MMTG
OMT
OMTG
34 D
33 D
20 D
19 D
32 D
31 D
18 D
28 D
30 D
29 D
L
P
G
R
Y
BR
B
R
B
G
(∗1)
1 D
4 D
2 D
5 D
3 D
6 D
1 E
4 E
3 E
6 E
W–B
B A
J12(A)
Junction Connector
8 EB1
EF
M 9(D), M10(E)
Motor Generator No. 2

Cruise Control

System Outline

Cruise control is the speed control device, which can set desired speed by just operating the switch on the control panel without applying the accelerator pedal. The device can be used when driver would like to drive the vehicle at fixed speed.

1. Set Control

If the cruise control switch is pushed to – SET side and hand is released from the switch during driving, (The available range of set speed: between 40 and 200 km/h) with the ON–OFF switch at ON (Power indicator comes on), the device stores vehicle speed at that time and controls it constantly at the set speed.

2. Set Speed Control

The device compares the actual vehicle speed with the set speed, and controls the driving power of the motor and the engine by calculating the cruise control requirements to drive it constantly at the set speed.

3. Coast Control

If the cruise control switch is kept pushed to the – SET side during driving in the cruise control mode, the device recognizes the cruise control requirement is at zero and decelerates the vehicle speed. When hand is released from the cruise control switch, the device stores the vehicle speed while the vehicle speed is decelerating. From then on, vehicle speed is controlled to stay at that speed.

Every time the switch is operated to – SET side momentarily (For about 0.5 seconds), the set speed is decreased by about 1.6 km/h. However, in case of tap–down operation to make more than 5 km/h gap between the set speed and the actual vehicle speed, the device recalls the original set speed and controls it at the speed constantly.

4. Accel Control

If the cruise control switch is kept pushed to the + RES side during driving in the cruise control mode, the device recognizes the cruise control is on the acceleration side and accelerates the vehicle speed. When hand is released from the cruise control switch, the device stores the vehicle speed at that time and controls it with the set speed constantly.

Every time the switch is operated to + RES side momentarily (For about 0.5 seconds), the set speed is increased by about 1.6 km/h. However, in case of tap–up operation to make more than 5 km/h gap between the set speed and the actual vehicle speed, the device does not change the set speed. (Tap–up operation is not available.)

5. Resume Control

After the cruise control mode is cancelled by any one the cancel switches, the mode can be resumed and controlled at the set speed by operating the cruise control switch in the + RES direction providing that the vehicle speed has not dropped below the low speed limit [Approx. 40 km/h (25 mph)].

The mode cannot be resumed if the vehicle speed once drops below the low speed limit, because the speed in the memory is cleared.

6. Manual Cancel Control

If any of the following signals is sent to the device while the vehicle is running in the cruise control, the cruise control is cancelled accordingly.

* Stop light switch: ON (Depressing the brake pedal)
* CANCEL switch of control switch: ON
* ON–OFF switch: OFF

7. Auto Cancel Function

A) The set speed is cleared and the cruise control is canceled under the following conditions. The cruise main indicator blinks until the main switch is turned OFF. The speed control is unavailable unless the main switch is turned ON again.

* When the stop light switch open or short–circuits.
* When signal of sudden change in the vehicle speed is sent.

B) The set speed is cleared and the cruise control is canceled under the following conditions.

* When there is malfunction of the stop light switch input circuit.
* When the vehicle speed becomes lower than 40 km/h.
* When the vehicle speed becomes lower than the speed that 16 km/h is subtracted from the set speed.

○ : Parts Location

Code	See Page	Code	See Page	Code	See Page
A8	48	J1	47	M10 E	47
B5 A	48	J3	47	P6	51
C2	46	J6	50	S4 A	51
C10	49	J9	50	S5 B	51
C12	49	J12 A	50	S7 A	51
D1	49	J13 B	50	S8 B	51
E4 A	49	J14	50	S9 C	51
E5 B	49	J15	50	S10 D	51
E6 C	49	J16	50	S11	51
E7 D	49	J17	50	S16	51
G1	49	J18	50	T2	47
H14 A	49	J24	50	T3	47
H15 B	49	J25	50	T4	51
H16 C	49	M5	47	T5	51
H17 D	49	M9 D	47	T11	51

▭ : Relay Blocks

Code	See Page	Relay Blocks (Relay Block Location)
3	22	Engine Room R/B (Engine Compartment Left)

▭ : Junction Block and Wire Harness Connector

Code	See Page	Junction Block and Wire Harness (Connector Location)
1A	30	Engine Room Main Wire and Driver Side J/B (Lower Finish Panel)
1F	30	Instrument Panel Wire and Driver Side J/B (Lower Finish Panel)
1G		
1L	31	
1M		
3I	24	Engine Room Main Wire and Engine Room J/B (Engine Compartment Left)
3J		
4C	38	Instrument Panel Wire and Center Connector No.1 (Behind the Combination Meter)
4D		
4E		
4F		
4G		
4H		
4I		
4K		
4L		
5B	42	Instrument Panel Wire and Center Connector No.2 (Instrument Panel Brace RH)
5C		
5D		
5F		
5G		
5H		
5J		
5K		
5L		
5M		

: Connector Joining Wire Harness and Wire Harness

Code	See Page	Joining Wire Harness and Wire Harness (Connector Location)
EB1	56	Engine Wire and Engine Room Main Wire (Inside of the Engine Room R/B)
IA1	58	Engine Room Main Wire and Instrument Panel Wire (Upper Parts of Front Body Pillar LH)
IA3		
IG1	59	Instrument Panel Wire and Instrument Panel No.2 Wire (Behind the Combination Meter)
IG2		
II1	59	Engine Wire and Instrument Panel Wire (Behind the Glove Box)

: Ground Points

Code	See Page	Ground Points Location
EC	56	Engine Block
ED		
EE	56	Left Side of the Suspension Tower
EF		
IH	58	Cowl Side Panel LH
II	58	Instrument Panel Brace LH

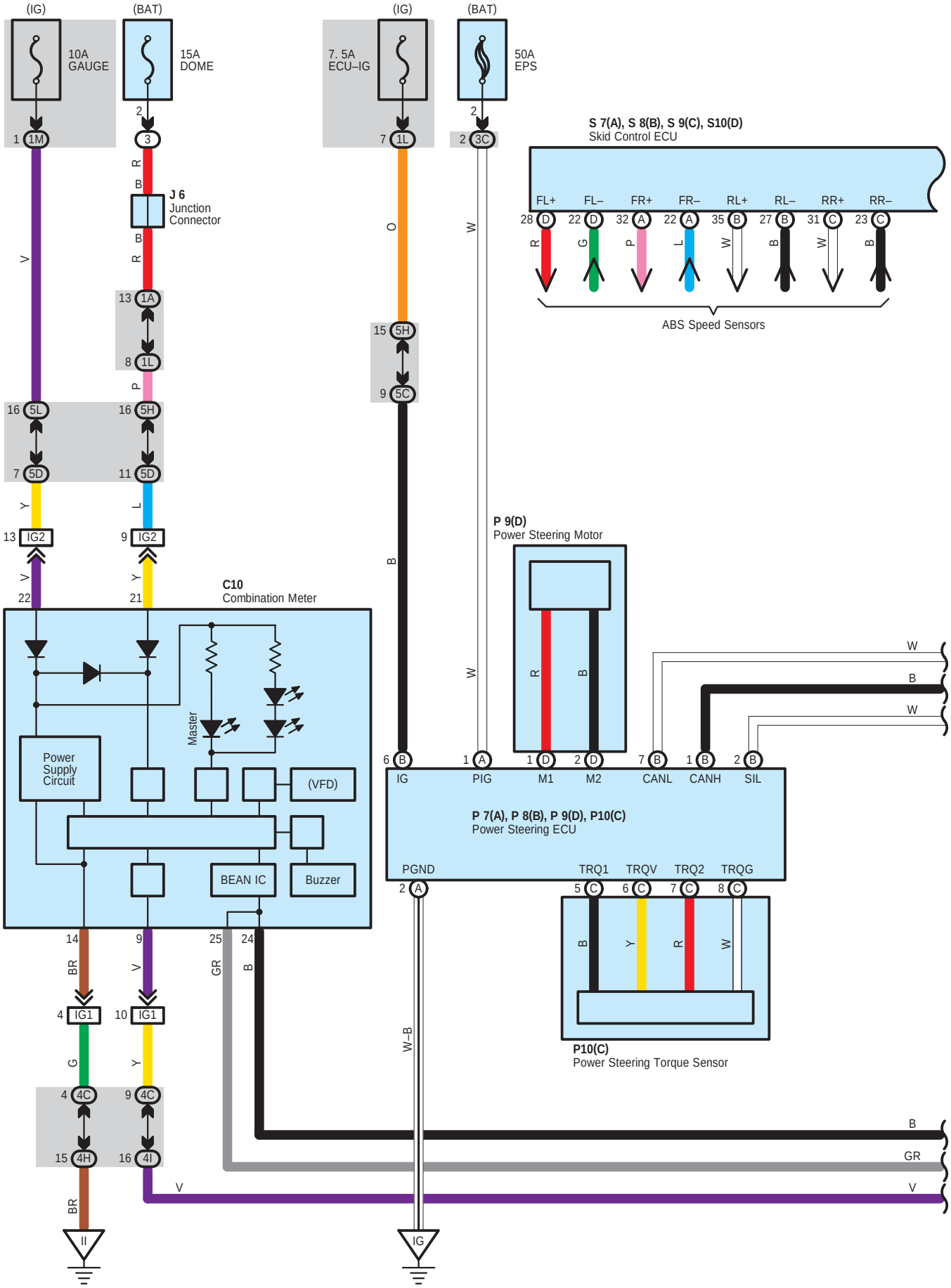
(IG)
(BAT)
10A
GAUGE
15A
DOME
7. 5A
ECU–IG
50A
EPS
J 6
Junction
Connector
S 7(A), S 8(B), S 9(C), S10(D)
Skid Control ECU
FL+
FL–
FR+
FR–
RL+
RL–
RR+
RR–
ABS Speed Sensors
C10
Combination Meter
Power
Supply
Circuit
Master
(VFD)
BEAN IC
Buzzer
P 9(D)
Power Steering Motor
P 7(A), P 8(B), P 9(D), P10(C)
Power Steering ECU
IG
PIG
M1
M2
CANL
CANH
SIL
PGND
TRQ1
TRQV
TRQ2
TRQG
P10(C)
Power Steering Torque Sensor
IG1
IG2
W–B

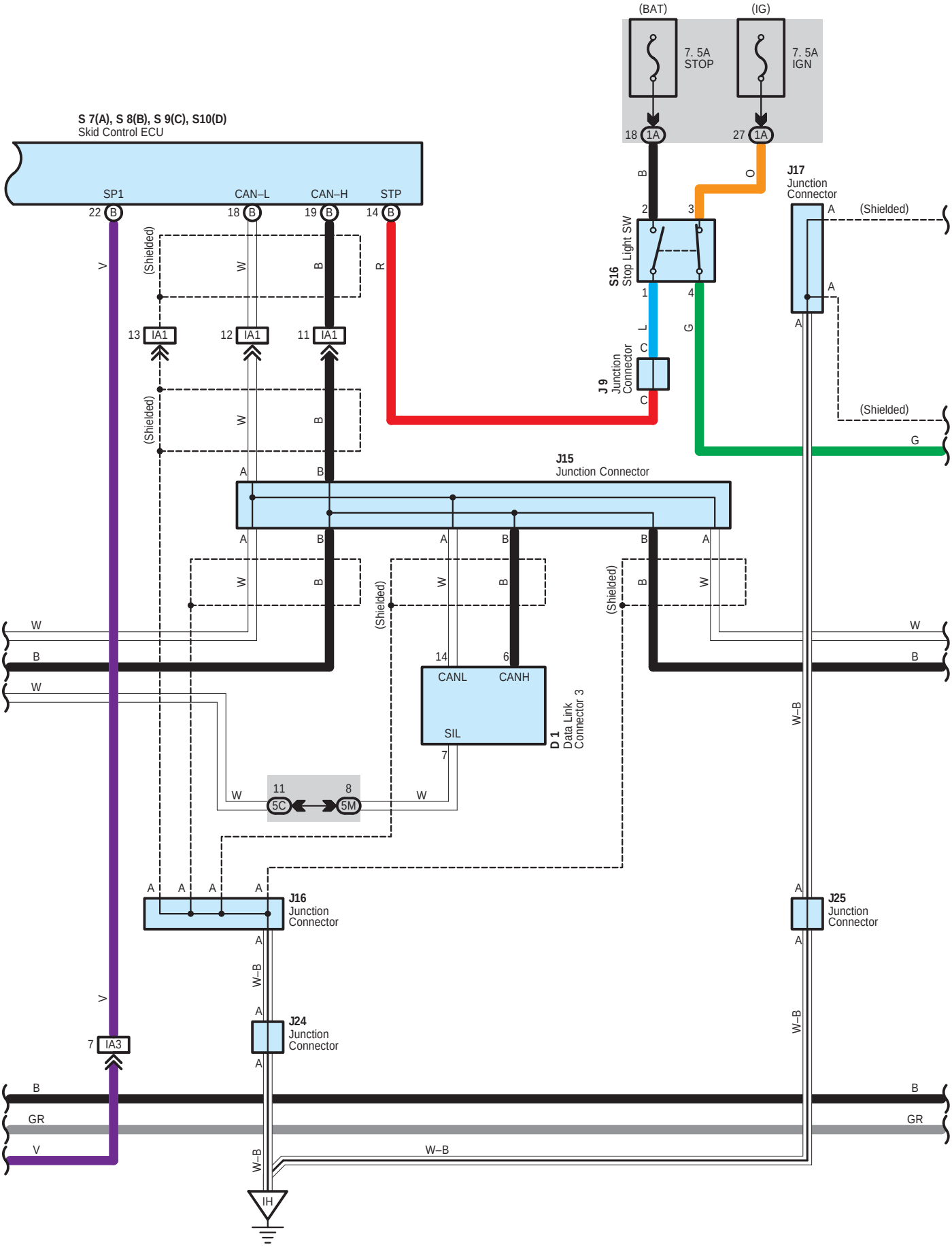
(BAT)
(IG)
7. 5A
STOP
7. 5A
IGN
18 1A
27 1A
S 7(A), S 8(B), S 9(C), S10(D)
Skid Control ECU
SP1
CAN–L
CAN–H
STP
22 B
18 B
19 B
14 B
S16
Stop Light SW
J17
Junction
Connector
(Shielded)
J9
Junction
Connector
13 IA1
12 IA1
11 IA1
J15
Junction Connector
CANL
CANH
SIL
D 1
Data Link
Connector 3
5C
5M
J16
Junction
Connector
J25
Junction
Connector
J24
Junction
Connector
7 IA3
IH
W–B

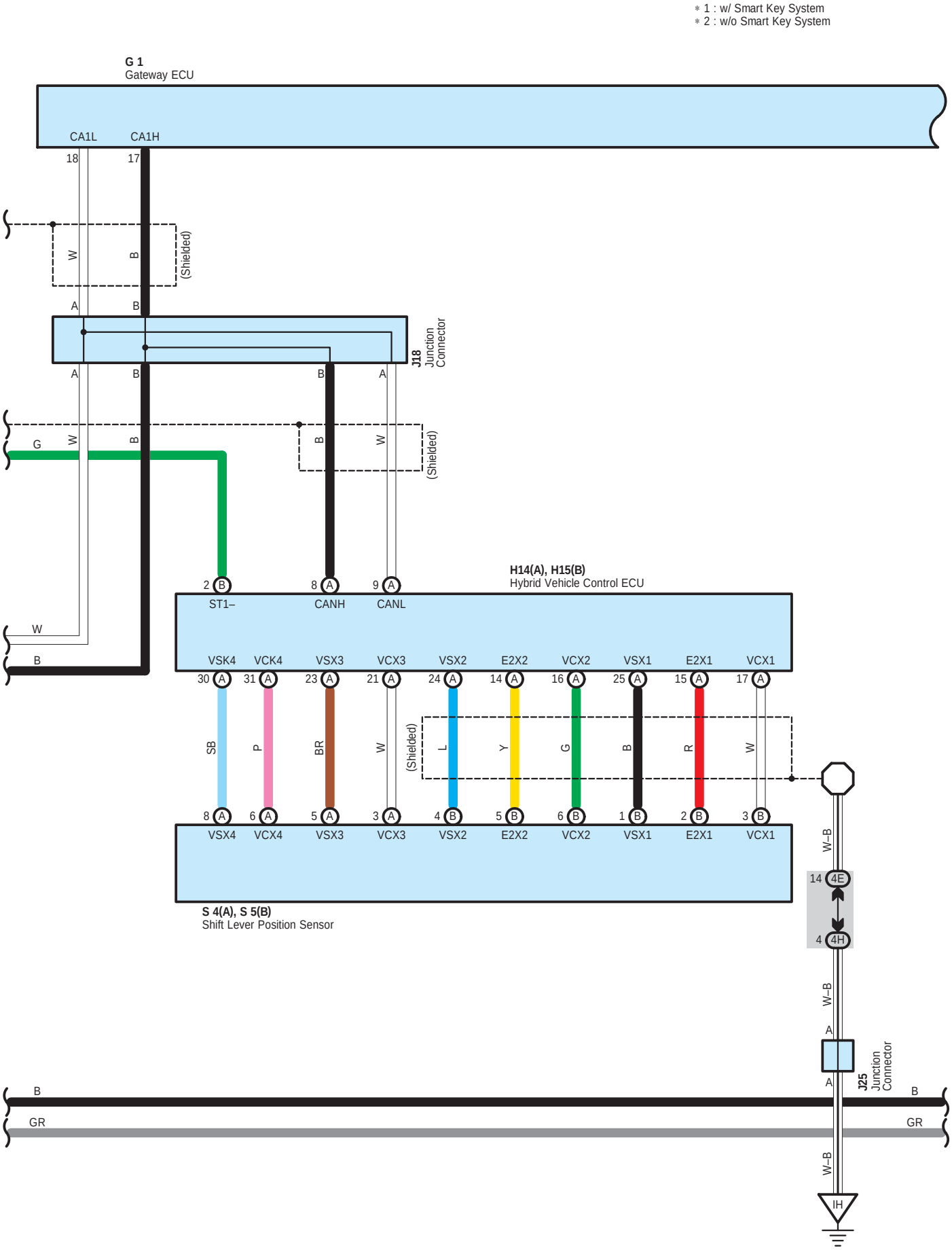
* 1 : w/ Smart Key System
* 2 : w/o Smart Key System
G 1
Gateway ECU
CA1L
CA1H
18
17
W
B
(Shielded)
A
B
J18
Junction Connector
A
B
B
A
G
W
B
B
W
(Shielded)
W
B
H14(A), H15(B)
Hybrid Vehicle Control ECU
2 B
ST1–
8 A
CANH
9 A
CANL
VSK4
VCK4
VSX3
VCX3
VSX2
E2X2
VCX2
VSX1
E2X1
VCX1
30 A
31 A
23 A
21 A
24 A
14 A
16 A
25 A
15 A
17 A
SB
P
BR
W
(Shielded)
L
Y
G
B
R
W
8 A
6 A
5 A
3 A
4 B
5 B
6 B
1 B
2 B
3 B
VSX4
VCX4
VSX3
VCX3
VSX2
E2X2
VCX2
VSX1
E2X1
VCX1
S 4(A), S 5(B)
Shift Lever Position Sensor
W-B
14 4E
4 4H
W-B
A
A
J25
Junction Connector
B
GR
B
GR
W-B
IH

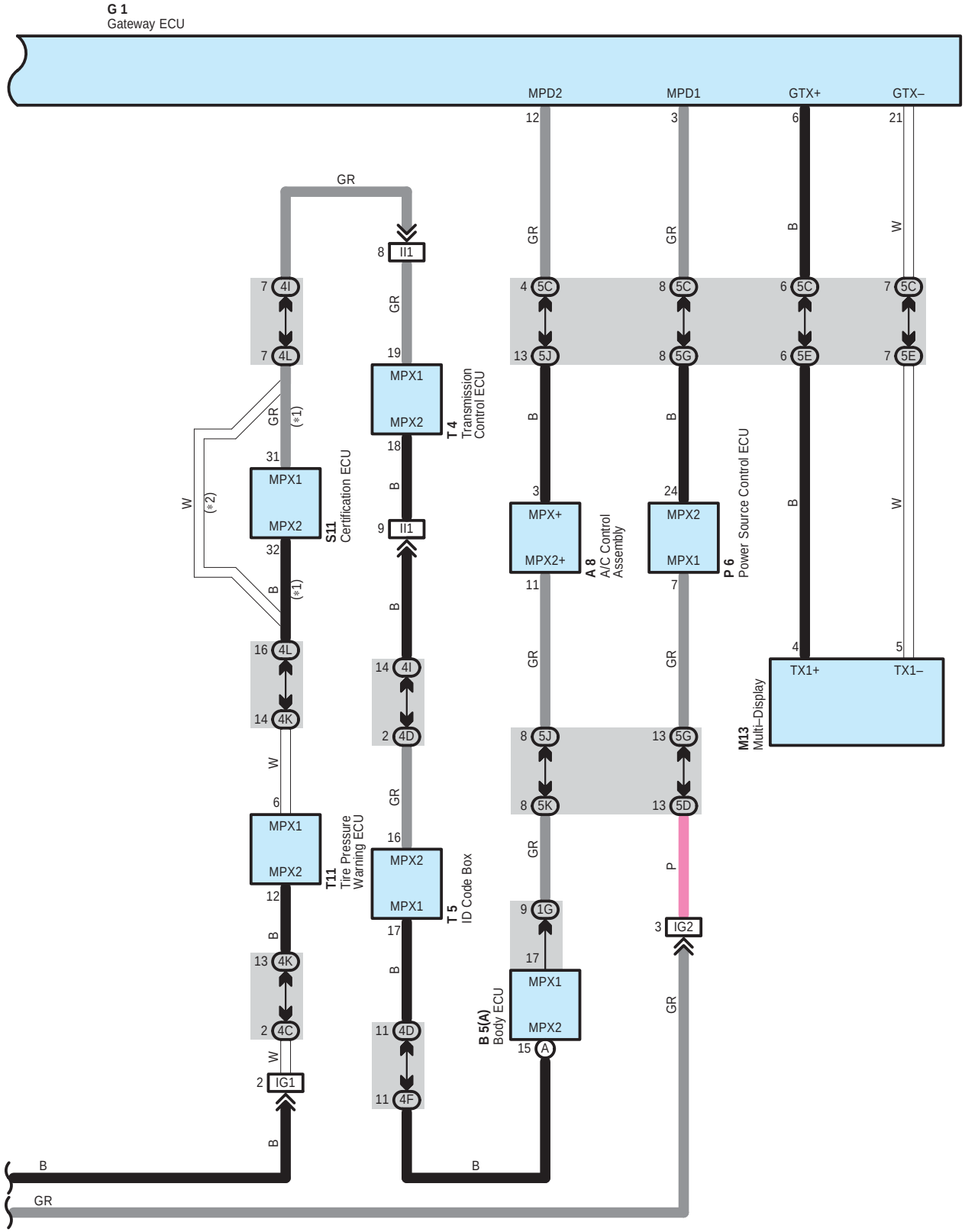
G 1
Gateway ECU
MPD2
MPD1
GTX+
GTX–
GR
W
B
(*1)
(*2)
MPX1
MPX2
MPX+
MPX2+
S11
Certification ECU
T 4
Transmission Control ECU
T11
Tire Pressure Warning ECU
T 5
ID Code Box
A 8
A/C Control Assembly
P 6
Power Source Control ECU
M13
Multi–Display
TX1+
TX1–
B 5(A)
Body ECU
IG1
IG2

EPS

System Outline

This is a system to assist the driver to steer the vehicle with easy steering force. Based on torque signal of steering from power steering torque sensor, and vehicle speed and other vehicle information from skid control ECU, power steering ECU calculates assisting current to control power steering motor.
Under the system in abnormality, power source relay and motor relay in power steering ECU is shut down and master warning lamp on combination meter blinks as well as P/S warning is indicated, resulting to stop the assistance.

○ : Parts Location

Code	See Page	Code	See Page	Code	See Page
A8	48	J17	50	S5 B	51
B5 A	48	J18	50	S7 A	51
C10	49	J24	50	S8 B	51
D1	49	J25	50	S9 C	51
G1	49	M13	50	S10 D	51
H14 A	49	P6	51	S11	51
H15 B	49	P7 A	51	S16	51
J6	50	P8 B	51	T4	51
J9	50	P9 D	51	T5	51
J15	50	P10 C	51	T11	51
J16	50	S4 A	51		

▭ : Relay Blocks

Code	See Page	Relay Blocks (Relay Block Location)
3	22	Engine Room R/B (Engine Compartment Left)

▭ : Junction Block and Wire Harness Connector

Code	See Page	Junction Block and Wire Harness (Connector Location)
1A	30	Engine Room Main Wire and Driver Side J/B (Lower Finish Panel)
1G	30	Instrument Panel Wire and Driver Side J/B (Lower Finish Panel)
1L	31	
1M		
3C	23	Engine Room Main Wire and Engine Room J/B (Engine Compartment Left)
4C	38	Instrument Panel Wire and Center Connector No.1 (Behind the Combination Meter)
4D		
4E		
4F		
4H		
4I		
4K		
4L		
5C	42	Instrument Panel Wire and Center Connector No.2 (Instrument Panel Brace RH)
5D		
5E		
5G		
5H		
5J		
5K		
5L		
5M		

: **Connector Joining Wire Harness and Wire Harness**

Code	See Page	Joining Wire Harness and Wire Harness (Connector Location)
IA1	58	Engine Room Main Wire and Instrument Panel Wire (Upper Parts of Front Body Pillar LH)
IA3		
IG1	59	Instrument Panel Wire and Instrument Panel No.2 Wire (Behind the Combination Meter)
IG2		
II1	59	Engine Wire and Instrument Panel Wire (Behind the Glove Box)

: **Ground Points**

Code	See Page	Ground Points Location
IG	58	Cowl Side Panel LH
IH		
II	58	Instrument Panel Brace LH

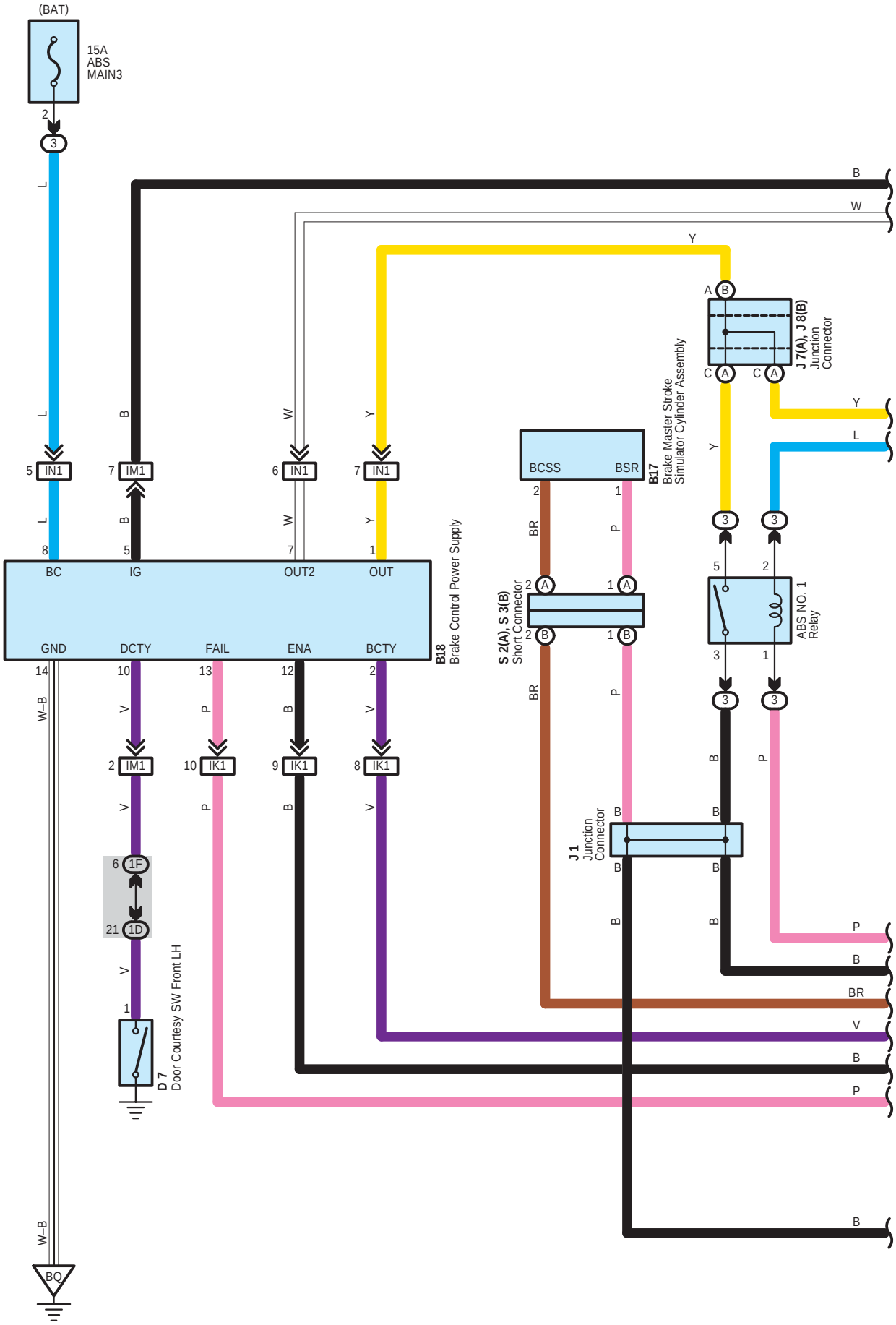
(BAT)
15A
ABS
MAIN3
BC
IG
OUT2
OUT
GND
DCTY
FAIL
ENA
BCTY
B18
Brake Control Power Supply
BCSS
BSR
B17
Brake Master Stroke
Simulator Cylinder Assembly
S 2(A), S 3(B)
Short Connector
J7(A), J 8(B)
Junction
Connector
J 1
Junction
Connector
ABS NO. 1
Relay
D 7
Door Courtesy SW Front LH
BQ
W-B

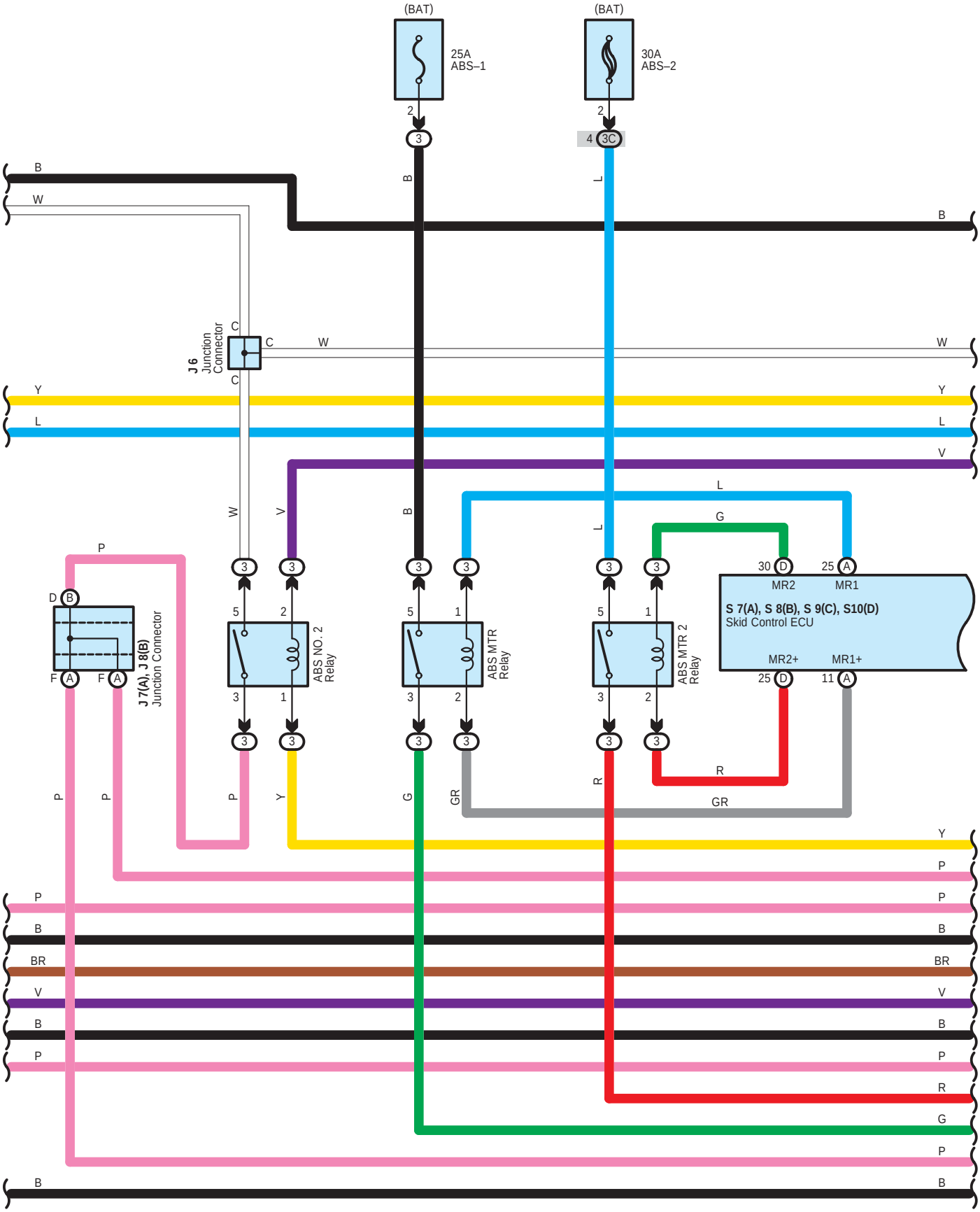
(BAT)
25A
ABS–1
(BAT)
30A
ABS–2
J 6
Junction
Connector
J 7(A), J 8(B)
Junction Connector
ABS NO. 2
Relay
ABS MTR
Relay
ABS MTR 2
Relay
MR2
MR1
S 7(A), S 8(B), S 9(C), S10(D)
Skid Control ECU
MR2+
MR1+

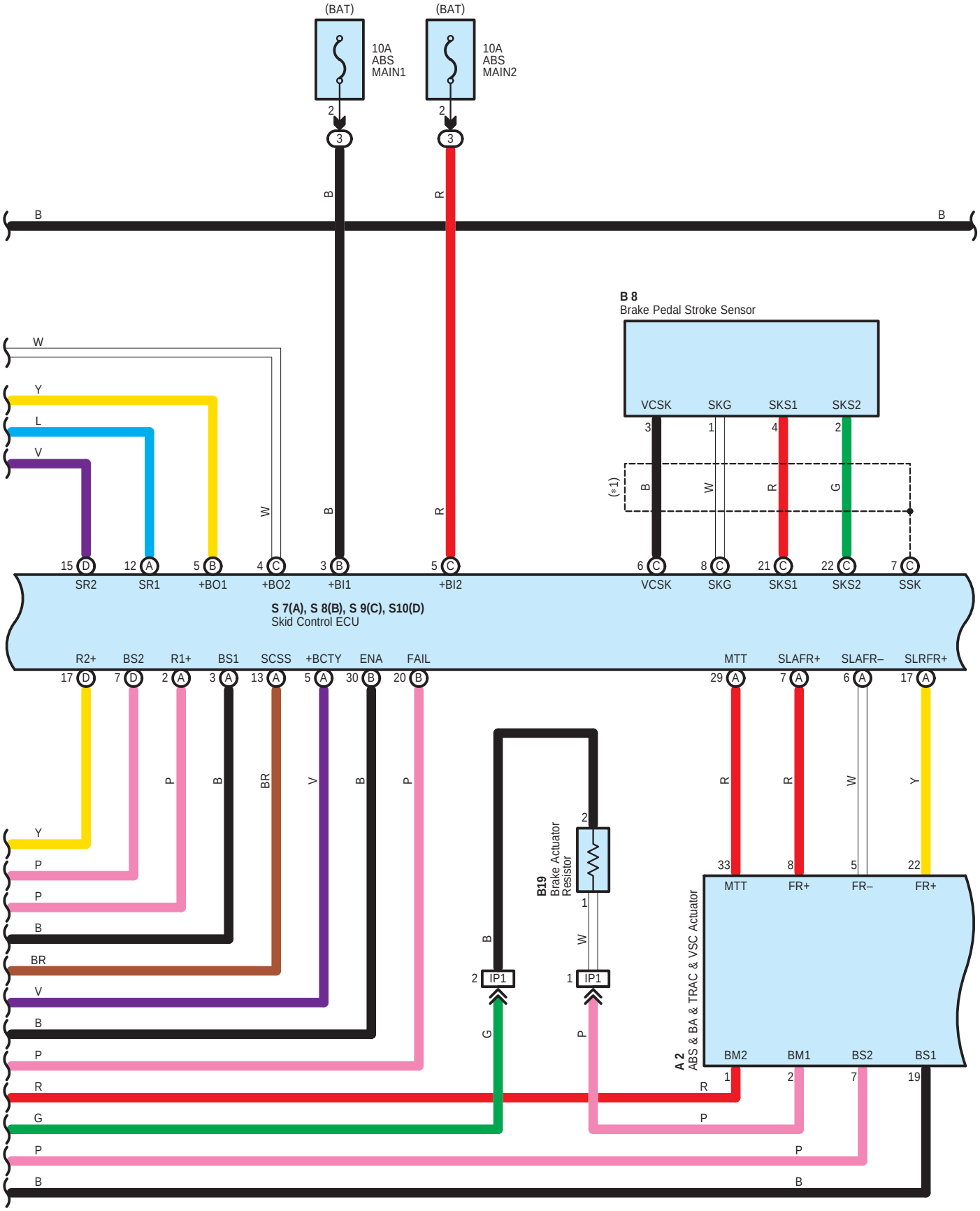
(BAT)
10A
ABS
MAIN1
(BAT)
10A
ABS
MAIN2
B 8
Brake Pedal Stroke Sensor
VCSK
SKG
SKS1
SKS2
(*1)
SR2
SR1
+BO1
+BO2
+BI1
+BI2
VCSK
SKG
SKS1
SKS2
SSK
S 7(A), S 8(B), S 9(C), S10(D)
Skid Control ECU
R2+
BS2
R1+
BS1
SCSS
+BCTY
ENA
FAIL
MTT
SLAFR+
SLAFR–
SLRFR+
B19
Brake Actuator
Resistor
IP1
IP1
A 2
ABS & BA & TRAC & VSC Actuator
MTT
FR+
FR–
FR+
BM2
BM1
BS2
BS1

∗ 1 : Shielded

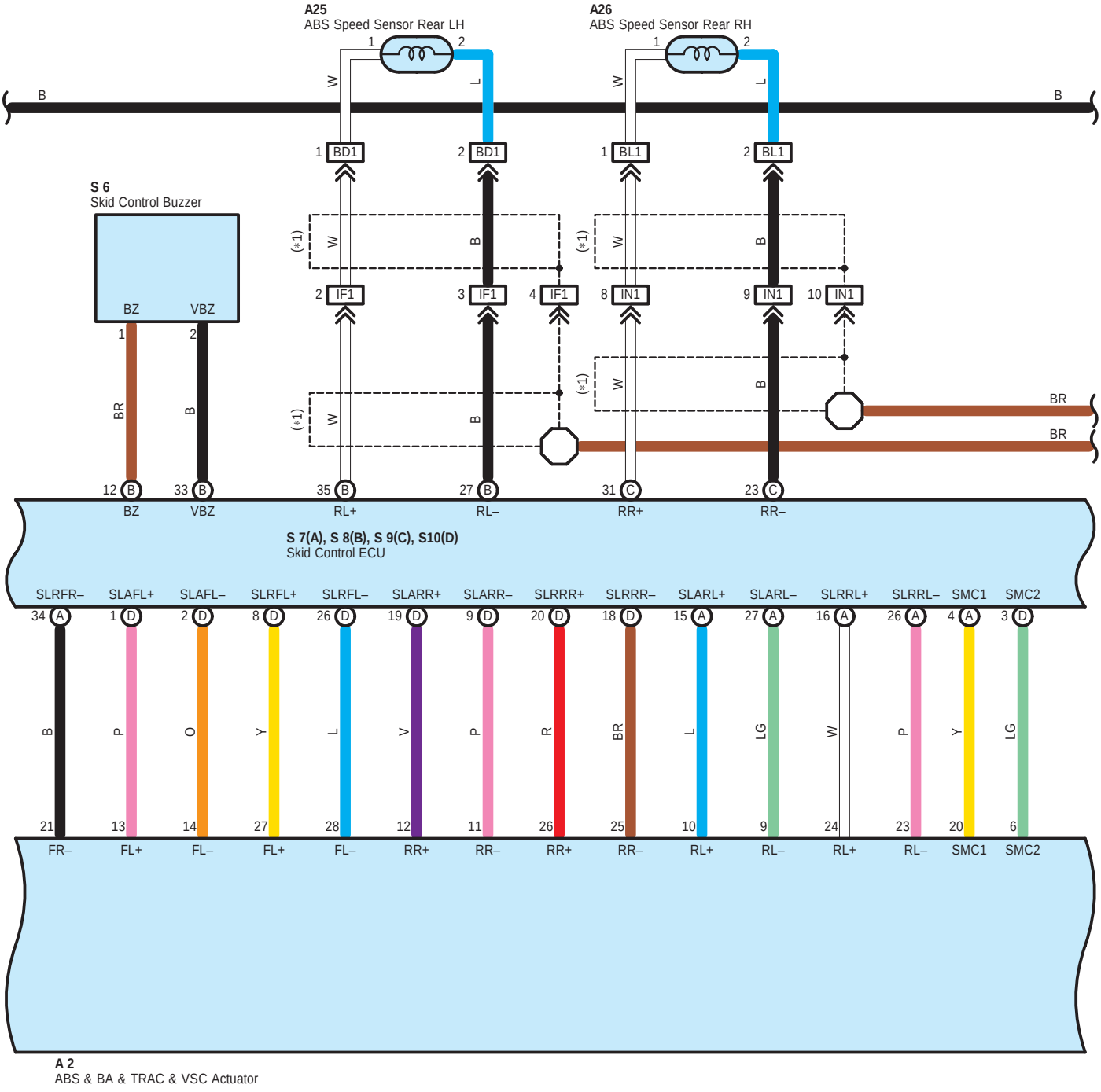
A25
ABS Speed Sensor Rear LH
A26
ABS Speed Sensor Rear RH
S 6
Skid Control Buzzer
BZ
VBZ
S 7(A), S 8(B), S 9(C), S10(D)
Skid Control ECU
SLRFR–
SLAFL+
SLAFL–
SLRFL+
SLRFL–
SLARR+
SLARR–
SLRRR+
SLRRR–
SLARL+
SLARL–
SLRRL+
SLRRL–
SMC1
SMC2
FR–
FL+
FL–
FL+
FL–
RR+
RR–
RR+
RR–
RL+
RL–
RL+
RL–
SMC1
SMC2
A 2
ABS & BA & TRAC & VSC Actuator

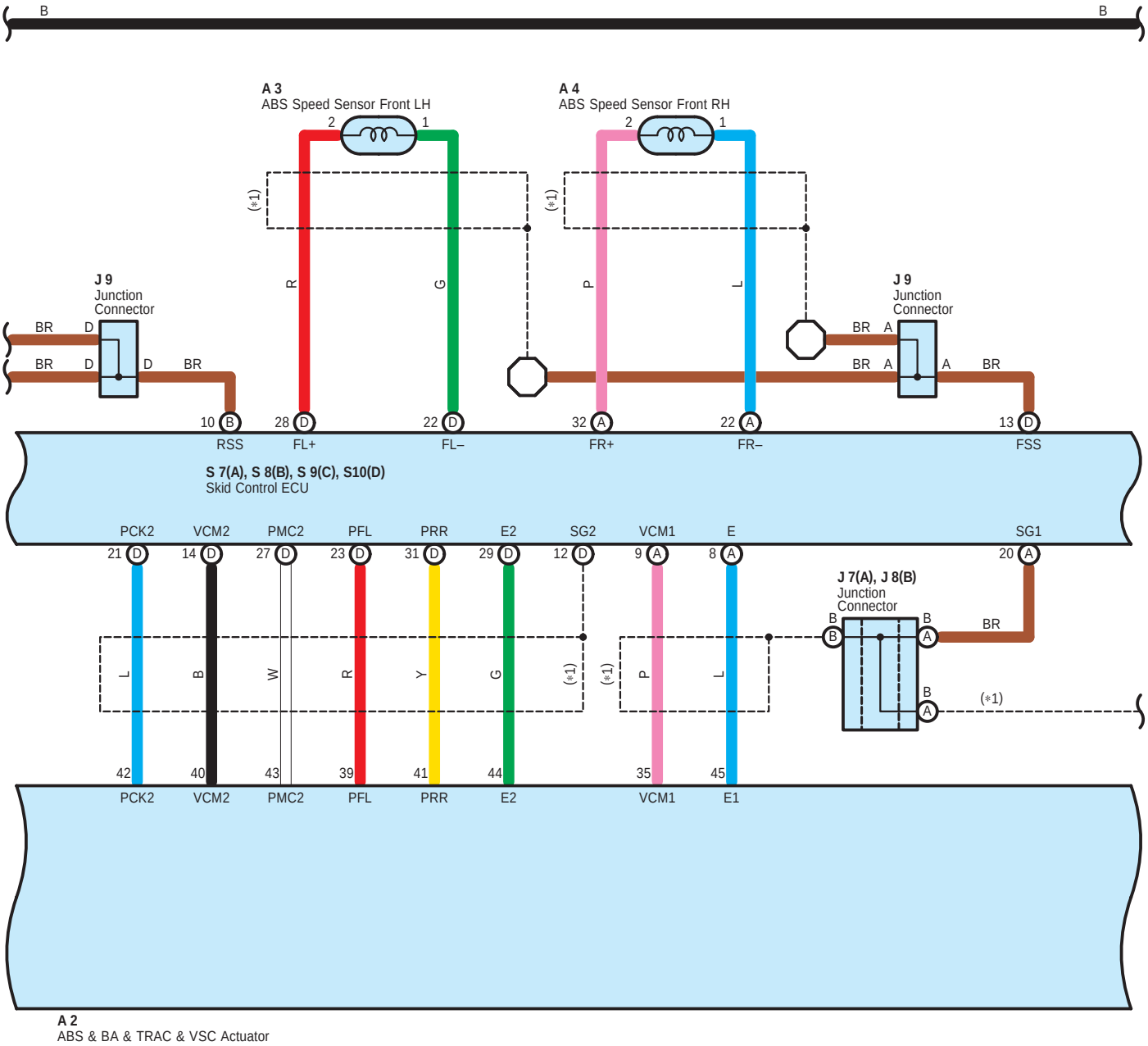
B
B
A 3
ABS Speed Sensor Front LH
A 4
ABS Speed Sensor Front RH
J 9
Junction
Connector
J 9
Junction
Connector
BR
D
BR
D
D
BR
BR
A
BR
A
A
BR
R
G
P
L
(*1)
(*1)
10 B
RSS
28 D
FL+
22 D
FL–
32 A
FR+
22 A
FR–
13 D
FSS
S 7(A), S 8(B), S 9(C), S10(D)
Skid Control ECU
PCK2
VCM2
PMC2
PFL
PRR
E2
SG2
VCM1
E
SG1
21 D
14 D
27 D
23 D
31 D
29 D
12 D
9 A
8 A
20 A
J 7(A), J 8(B)
Junction
Connector
B
B
B
A
B
A
BR
(*1)
L
B
W
R
Y
G
(*1)
(*1)
P
L
42
40
43
39
41
44
35
45
PCK2
VCM2
PMC2
PFL
PRR
E2
VCM1
E1
A 2
ABS & BA & TRAC & VSC Actuator

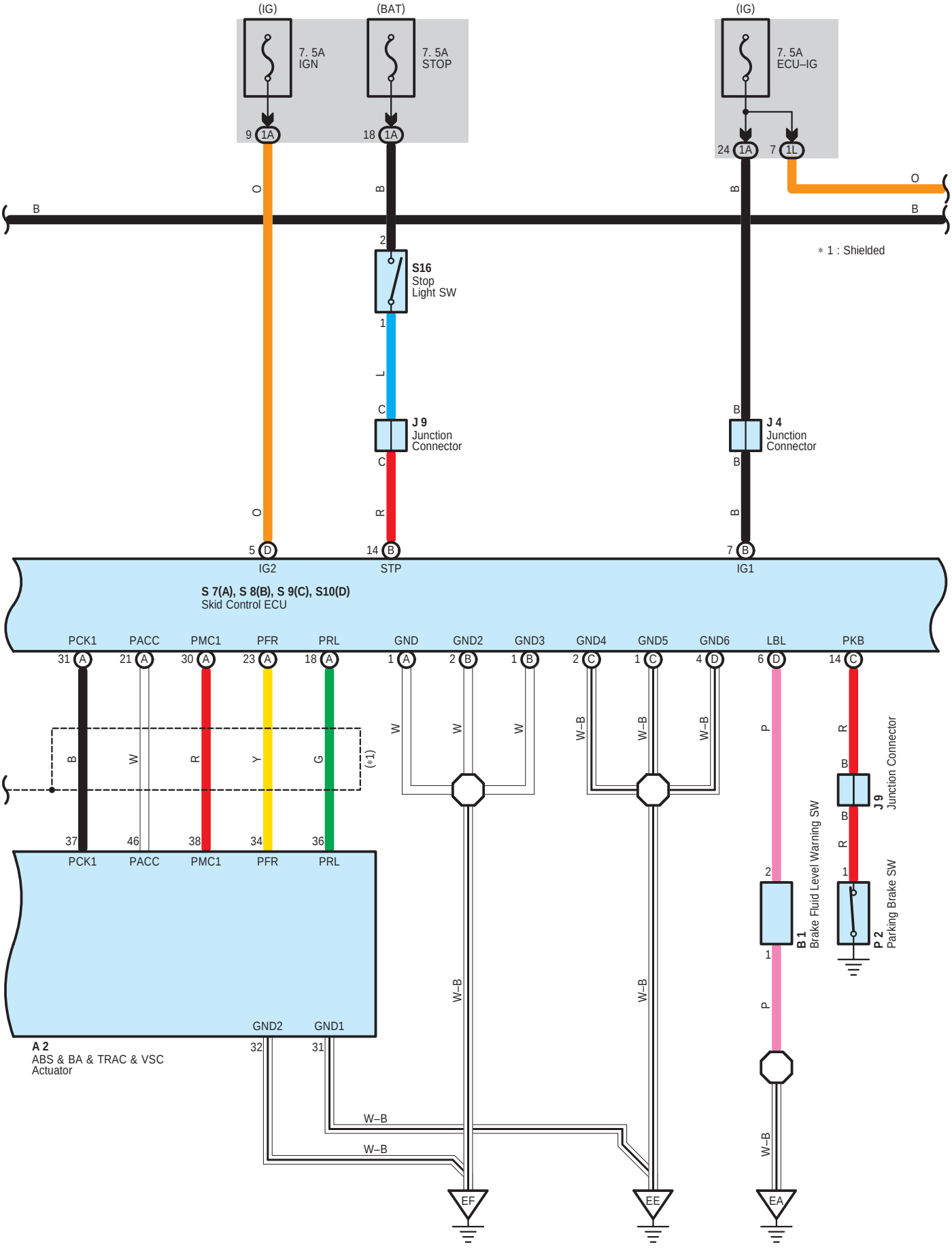
(IG)
(BAT)
(IG)
7. 5A
IGN
7. 5A
STOP
7. 5A
ECU–IG
9 1A
18 1A
24 1A
7 1L
O
B
B
B
O
B
B
2
S16
Stop
Light SW
1
L
C
J 9
Junction
Connector
C
R
B
J 4
Junction
Connector
B
B
O
5 D
IG2
14 B
STP
7 B
IG1
＊1 : Shielded
S 7(A), S 8(B), S 9(C), S10(D)
Skid Control ECU
PCK1
PACC
PMC1
PFR
PRL
GND
GND2
GND3
GND4
GND5
GND6
LBL
PKB
31 A
21 A
30 A
23 A
18 A
1 A
2 B
1 B
2 C
1 C
4 D
6 D
14 C
B
W
R
Y
G
(＊1)
W
W
W
W–B
W–B
W–B
P
R
B
B
R
37
46
38
34
36
PCK1
PACC
PMC1
PFR
PRL
A 2
ABS & BA & TRAC & VSC
Actuator
GND2
GND1
32
31
W–B
W–B
W–B
W–B
EF
EE
EA
2
1
B 1
Brake Fluid Level Warning SW
P
W–B
1
2
P 2
Parking Brake SW
J 9
Junction Connector

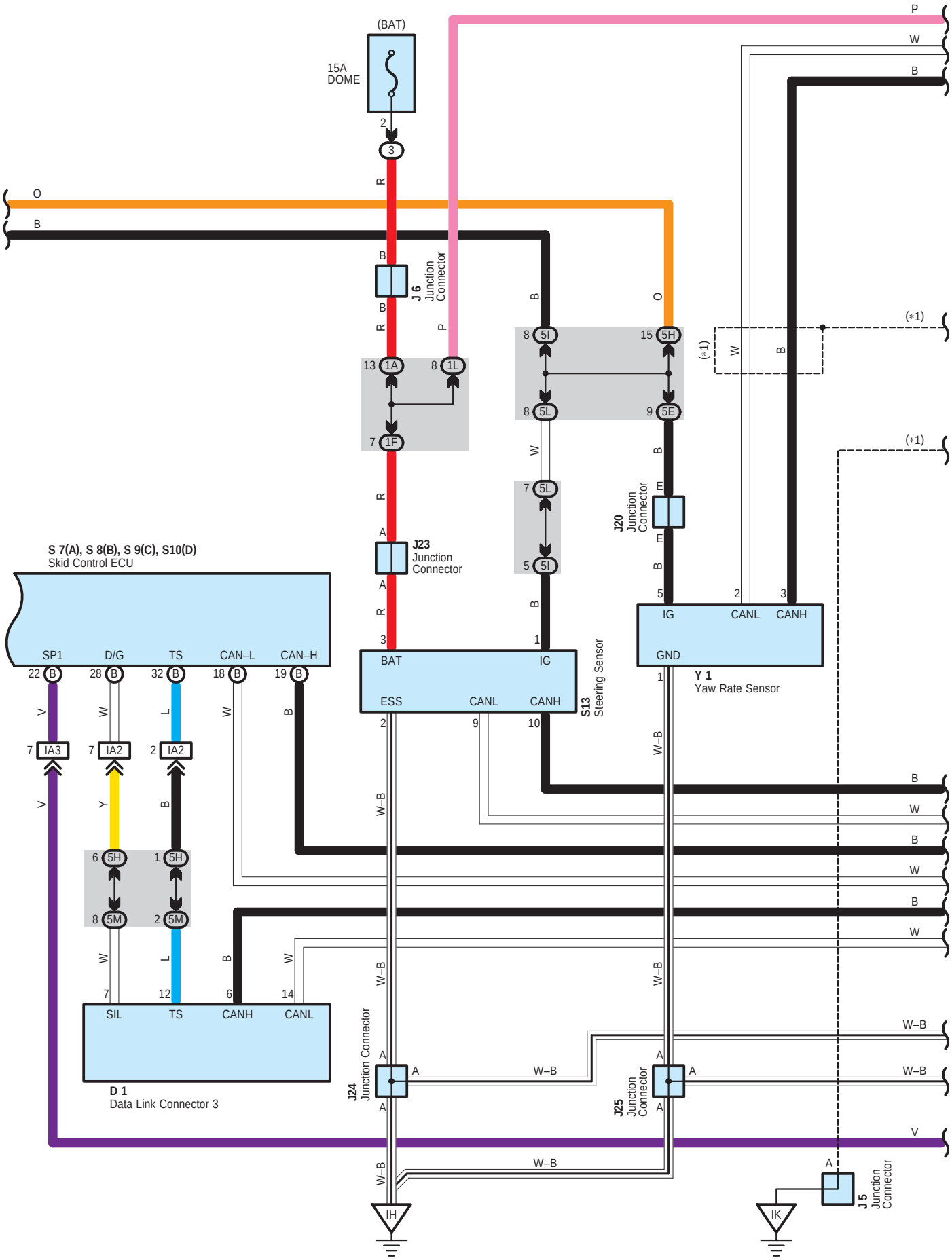
(BAT)
15A
DOME
2
3
R
O
B
P
W
B
J6
Junction
Connector
13 1A
8 1L
7 1F
8 5I
15 5H
8 5L
9 5E
7 5L
5 5I
(*1)
J20
Junction
Connector
S 7(A), S 8(B), S 9(C), S10(D)
Skid Control ECU
SP1
D/G
TS
CAN–L
CAN–H
22 B
28 B
32 B
18 B
19 B
7 IA3
7 IA2
2 IA2
J23
Junction
Connector
BAT
IG
ESS
CANL
CANH
S13
Steering Sensor
IG
CANL
CANH
GND
Y 1
Yaw Rate Sensor
6 5H
1 5H
8 5M
2 5M
SIL
TS
CANH
CANL
D 1
Data Link Connector 3
J24
Junction Connector
J25
Junction
Connector
W–B
J5
Junction
Connector
IH
IK

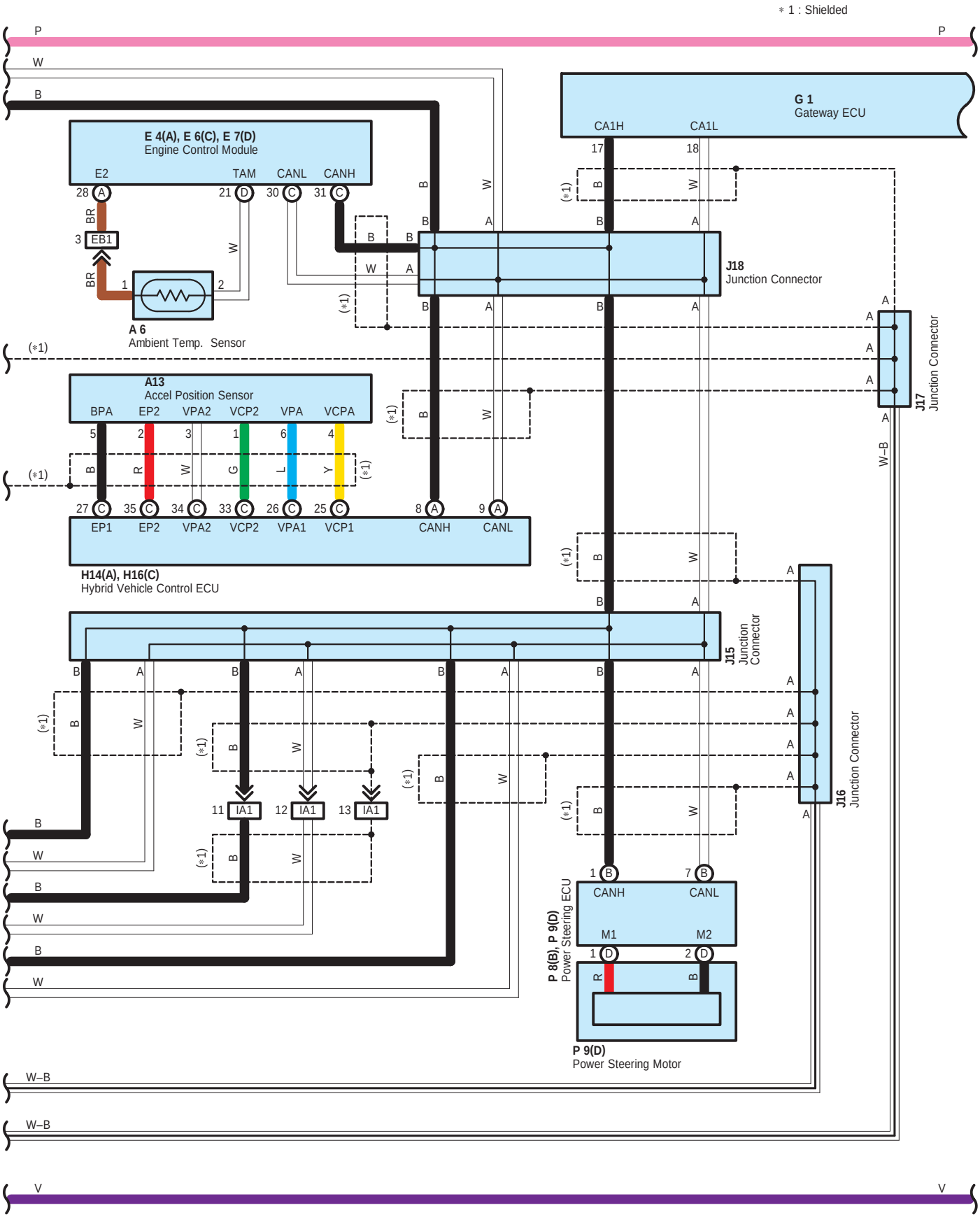
∗1 : Shielded
P
W
B
G 1
Gateway ECU
CA1H
CA1L
17
18
E 4(A), E 6(C), E 7(D)
Engine Control Module
E2
TAM
CANL
CANH
28 A
21 D
30 C
31 C
BR
3 EB1
1
2
W
A 6
Ambient Temp. Sensor
J18
Junction Connector
(∗1)
A13
Accel Position Sensor
BPA
EP2
VPA2
VCP2
VPA
VCPA
5
2
3
1
6
4
B
R
W
G
L
Y
27 C
35 C
34 C
33 C
26 C
25 C
8 A
9 A
EP1
EP2
VPA2
VCP2
VPA1
VCP1
CANH
CANL
H14(A), H16(C)
Hybrid Vehicle Control ECU
J17
Junction Connector
W–B
J15
Junction Connector
J16
Junction Connector
11 IA1
12 IA1
13 IA1
1 B
7 B
CANH
CANL
M1
M2
1 D
2 D
R
B
P 8(B), P 9(D)
Power Steering ECU
P 9(D)
Power Steering Motor
V

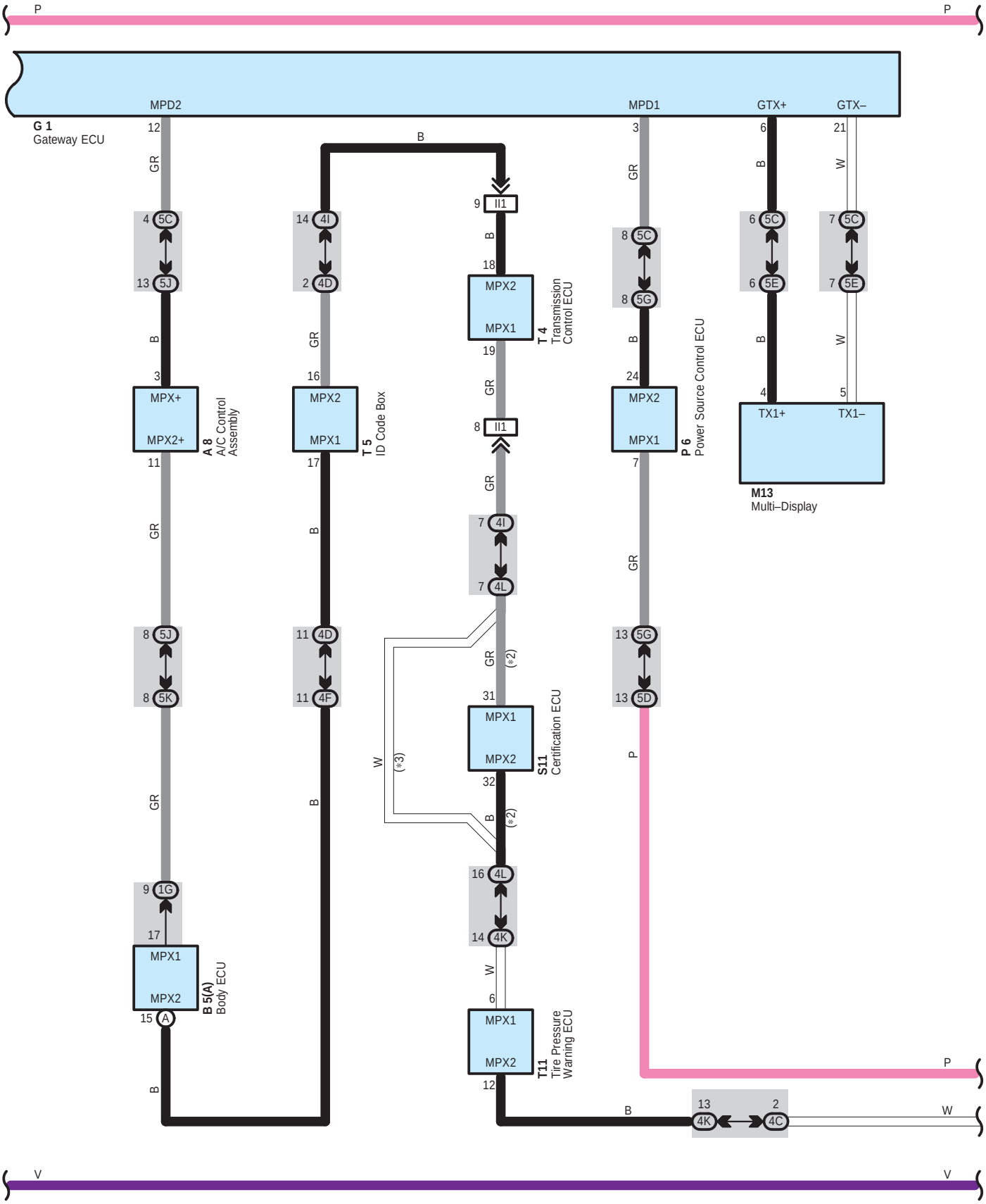
P
P
MPD2
MPD1
GTX+
GTX–
G 1
Gateway ECU
12
GR
4 5C
13 5J
B
3
MPX+
MPX2+
A 8
A/C Control
Assembly
11
GR
8 5J
8 5K
GR
9 1G
17
MPX1
MPX2
B 5(A)
Body ECU
15 A
B
B
14 4I
2 4D
GR
16
MPX2
MPX1
T 5
ID Code Box
17
B
11 4D
11 4F
B
9 II1
B
18
MPX2
MPX1
T 4
Transmission
Control ECU
19
GR
8 II1
GR
7 4I
7 4L
GR
(*2)
31
MPX1
MPX2
S11
Certification ECU
32
B
(*2)
16 4L
14 4K
W
6
MPX1
MPX2
T11
Tire Pressure
Warning ECU
12
W
(*3)
3
GR
8 5C
8 5G
B
24
MPX2
MPX1
P 6
Power Source Control ECU
7
GR
13 5G
13 5D
P
6
B
6 5C
6 5E
B
4
TX1+
M13
Multi–Display
21
W
7 5C
7 5E
W
5
TX1–
P
B
13 4K
2 4C
W
V
V

＊2 : w/ Smart Key System
＊3 : w/o Smart Key System

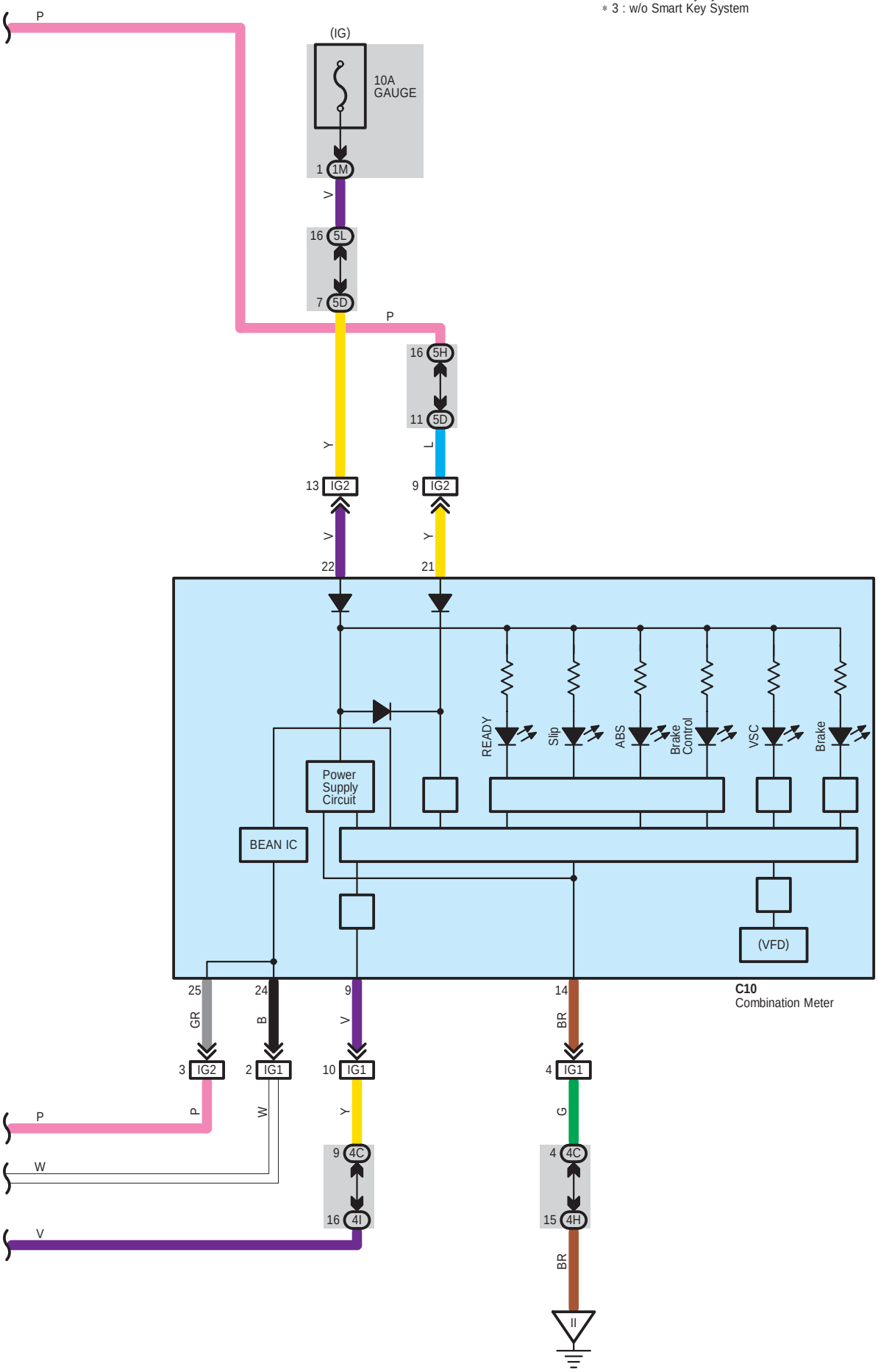

System Outline

1. ABS Operation

If the brake pedal is depressed suddenly, the ABS controls the hydraulic pressure of all the four wheel cylinders to automatically avoid wheel locking and to ensure the directional and steering stability of the vehicle. Under the situation, the skid control ECU controls the solenoids in the actuators, using the signals from the sensors to move the brake fluid to the reservoir in order to release the braking pressure applied to the wheel cylinder. If the skid control ECU detects that the fluid pressure in the wheel cylinder is insufficient, the ECU controls the solenoids in the actuators to increase the braking pressure.

2. Electronic Brake–Force Distribution

Skid control ECU distributes appropriate brake–force to front and rear wheels (Control of brake–force distribution to front and rear wheels) corresponding to the vehicle driving conditions. It also makes effective use of rear wheel brake–force to match loading condition and decelerating of the vehicle, resulting to reduce depressing of brake pedal and to ensure effective braking. In braking during making a turn, the ECU controls appropriate brake–force distribution to right and left wheels (Control of brake–force distribution to right and left wheels) to ensure stability and braking of the vehicle.

3. Brake Assist System

Skid control ECU recognizes emergency braking from detecting applying speed of brake pedal and brake travel, and controls braking effectiveness to supply strong brake–force for the emergency braking.

4. VSC Operation (w/ VSC)

Unexpected road conditions, emergency situation, and any other external factors may cause large under– or over–steering of the vehicle. If they occur, the VSC system automatically controls the driving power and wheel brakes to reduce the under– or over–steering.

To reduce large over–steering :

If the VSC system determines that the over–steering is large, it activates the brakes for the outer turning wheels depending on the degree of the over–steering to produce the moment toward the outside of the vehicle and reduce the over–steering.

To reduce large under–steering :

If the VSC system determines that the under–steering is large, it controls the driving power and activates the front wheel brakes and rear inner side wheel brake to reduce the under–steering.

If there is malfunction in the VSC system, the VSC indicator lights up to warn the driver.

5. Mutual System Control

Due to cooperative control with hybrid vehicle control ECU, skid control ECU controls hydraulic brake to collect much electrical energy by making the most use of regenerative brake.

Skid control ECU also improves stability of the vehicle, performing cooperative control with power steering ECU to give steering torque assistance, corresponding to driving conditions. (w/ VSC)

6. Electric Source Backup Function

Electric charge is stored in brake control power supply. If voltage of vehicle electricity is declined, electric charge is released to cover electric supply to the system.

7. Fail Safe Function

Skid control ECU monitors the system component parts electrically. In case there is abnormality in ECU, sensor signal and actuator, normal parts except parts with abnormality continue braking operation.

Even in case braking is shut off due to malfunction of oil pressure source, braking is secured as master cylinder pressure made by manpower works on wheel cylinder.

In case only regenerative brake is not effective due to abnormality in communication with hybrid vehicle control ECU, control will be changed to have oil pressure brake generate all the braking force

: Parts Location

Code	See Page	Code	See Page	Code	See Page
A2	46	E7 D	49	M13	50
A3	46	G1	49	P2	51
A4	46	H14 A	49	P6	51
A6	46	H16 C	49	P8 B	51
A8	48	J1	47	P9 D	51
A13	48	J4	47	S2 A	47
A25	52	J5	50	S3 B	47
A26	52	J6	50	S6	51
B1	46	J7 A	50	S7 A	51
B5 A	48	J8 B	50	S8 B	51
B8	48	J9	50	S9 C	51
B17	46	J15	50	S10 D	51
B18	52	J16	50	S11	51
B19	48	J17	50	S13	51
C10	49	J18	50	S16	51
D1	49	J20	50	T4	51
D7	52	J23	50	T5	51
E4 A	49	J24	50	T11	51
E6 C	49	J25	50	Y1	51

: Relay Blocks

Code	See Page	Relay Blocks (Relay Block Location)
3	22	Engine Room R/B (Engine Compartment Left)

: Junction Block and Wire Harness Connector

Code	See Page	Junction Block and Wire Harness (Connector Location)
1A	30	Engine Room Main Wire and Driver Side J/B (Lower Finish Panel)
1D	30	Floor Wire and Driver Side J/B (Lower Finish Panel)
1F	30	Instrument Panel Wire and Driver Side J/B (Lower Finish Panel)
1G		
1L	31	
1M		
3C	23	Engine Room Main Wire and Engine Room J/B (Engine Compartment Left)
4C	38	Instrument Panel Wire and Center Connector No.1 (Behind the Combination Meter)
4D		
4F		
4H		
4I		
4K		
4L		
5C	42	Instrument Panel Wire and Center Connector No.2 (Instrument Panel Brace RH)
5D		
5E		
5G		
5H		
5I		
5J		
5K		
5L		
5M		

: Connector Joining Wire Harness and Wire Harness

Code	See Page	Joining Wire Harness and Wire Harness (Connector Location)
EB1	56	Engine Wire and Engine Room Main Wire (Inside of the Engine Room R/B)
IA1	58	Engine Room Main Wire and Instrument Panel Wire (Upper Parts of Front Body Pillar LH)
IA2		
IA3		
IF1	58	Floor Wire and Engine Room Main Wire (Left Kick Panel)
IG1	59	Instrument Panel Wire and Instrument Panel No.2 Wire (Behind the Combination Meter)
IG2		
II1	59	Engine Wire and Instrument Panel Wire (Behind the Glove Box)
IK1	59	Engine Room Main Wire and Floor No.2 Wire (Cowl Side Panel RH)
IM1	59	Instrument Panel Wire and Floor No.2 Wire (Right Kick Panel)
IN1	59	Floor No.2 Wire and Engine Room Main Wire (Right Kick Panel)
IP1	59	Engine Room No.2 Wire and Engine Room Main Wire (Upper Parts of Front Body Pillar LH)
BD1	60	Skid Control Sensor No.1 Wire and Floor Wire (Front Side of Left Quarter Panel)
BL1	61	Skid Control Sensor No.2 Wire and Floor No.2 Wire (Front Side of Right Quarter Panel)

: Ground Points

Code	See Page	Ground Points Location
EA	56	Right Side of the Fender Apron
EE	56	Left Side of the Suspension Tower
EF		
IH	58	Cowl Side Panel LH
II	58	Instrument Panel Brace LH
IK	58	Cowl Side Panel RH
BQ	60	Rear Side of Right Quarter Panel

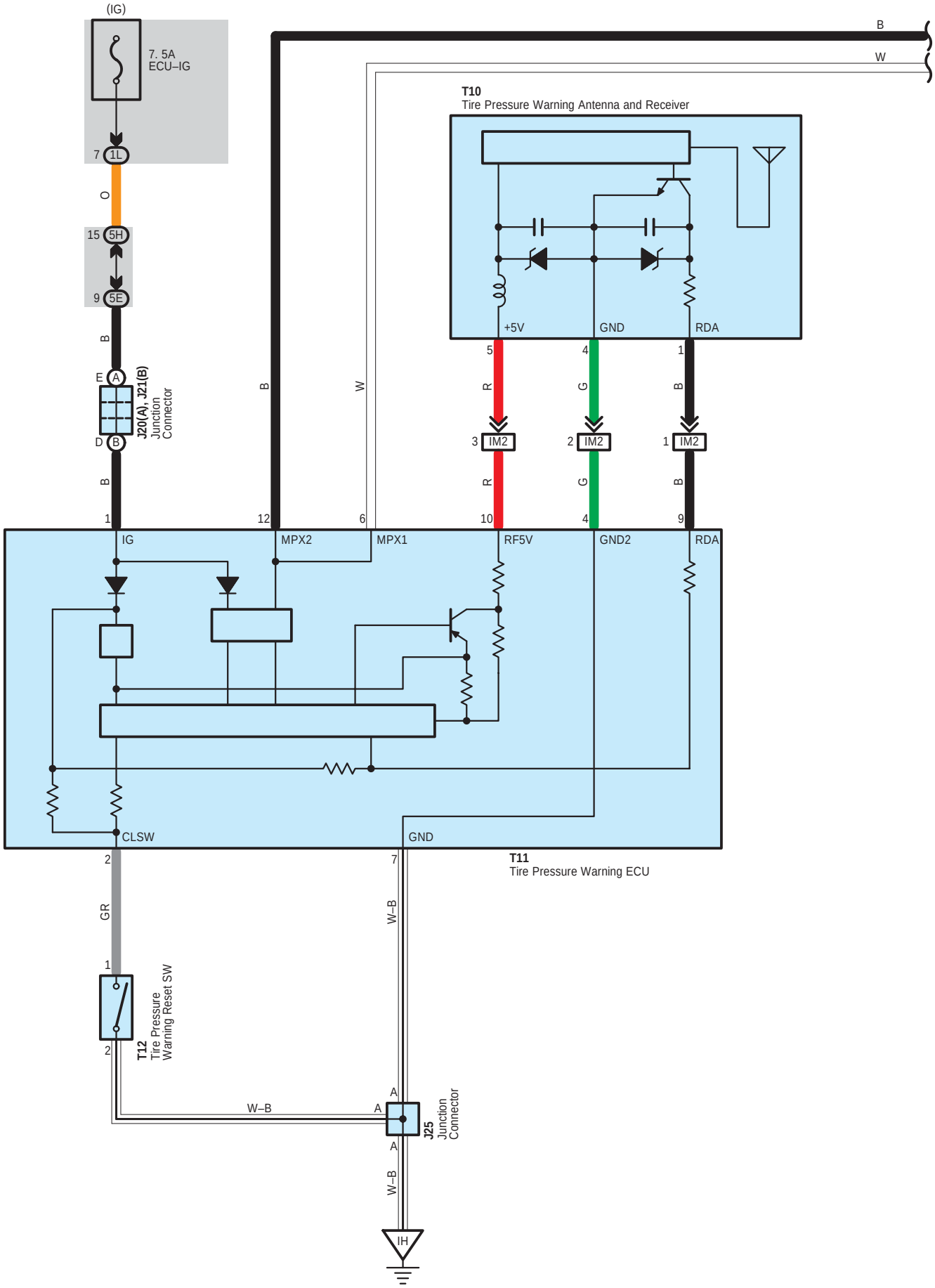
(IG)
7. 5A
ECU–IG
7
1L
O
15
5H
9
5E
B
E
A
J20(A), J21(B)
Junction
Connector
D
B
B
1
B
W
12
6
B
W
T10
Tire Pressure Warning Antenna and Receiver
+5V
GND
RDA
5
4
1
R
G
B
3
IM2
2
IM2
1
IM2
R
G
B
10
4
9
IG
MPX2
MPX1
RF5V
GND2
RDA
CLSW
GND
2
7
T11
Tire Pressure Warning ECU
GR
W–B
1
2
T12
Tire Pressure
Warning Reset SW
W–B
A
A
J25
Junction
Connector
A
W–B
IH

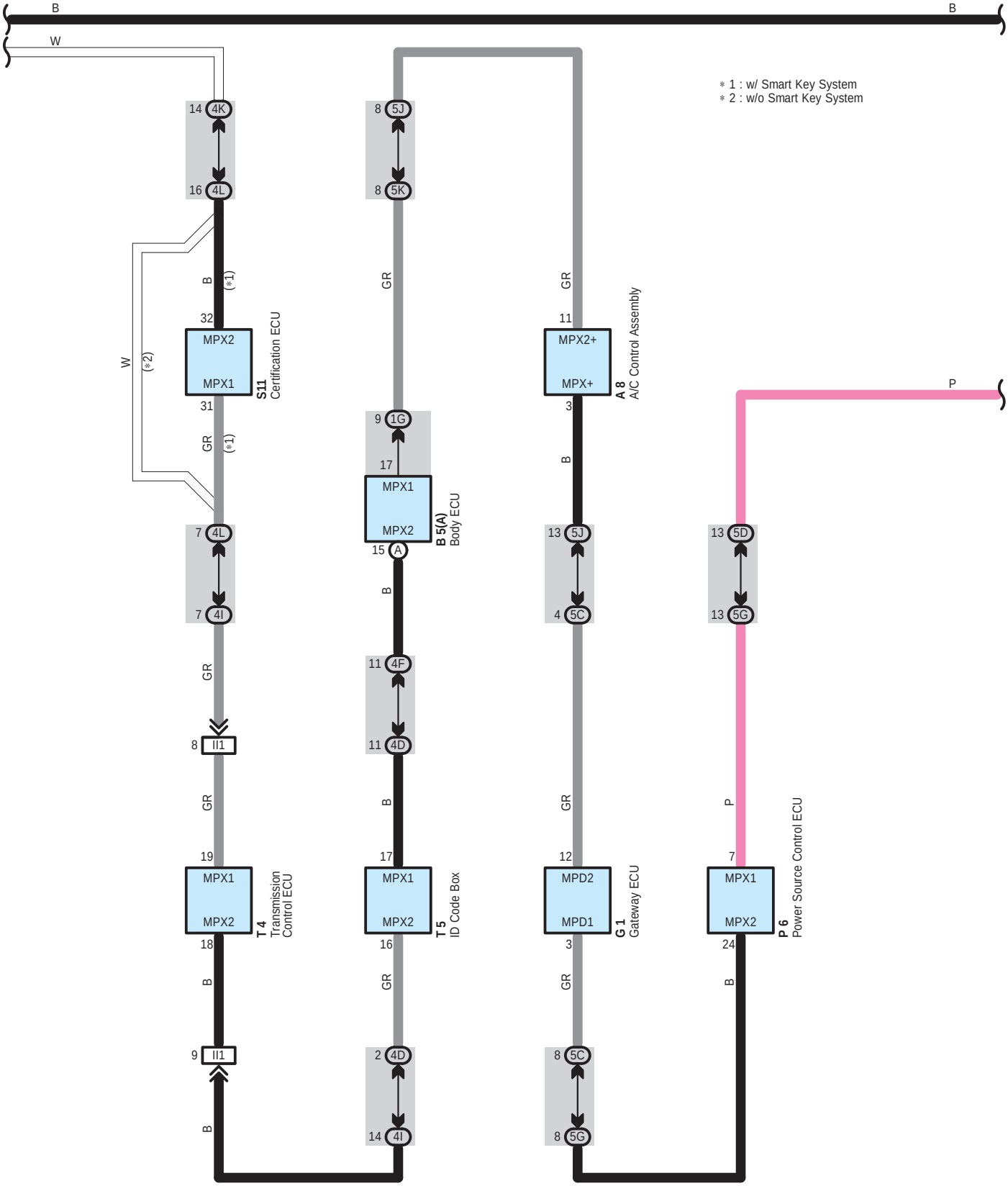
B
B
W
* 1 : w/ Smart Key System
* 2 : w/o Smart Key System
14 4K
16 4L
B
(*1)
32
MPX2
MPX1
31
S11
Certification ECU
W
(*2)
GR
(*1)
7 4L
7 4I
GR
8 II1
GR
19
MPX1
MPX2
18
T 4
Transmission Control ECU
B
9 II1
B
8 5J
8 5K
GR
9 1G
17
MPX1
MPX2
15 A
B 5(A)
Body ECU
B
11 4F
11 4D
B
17
MPX1
MPX2
16
T 5
ID Code Box
GR
2 4D
14 4I
GR
11
MPX2+
MPX+
A 8
A/C Control Assembly
3
B
13 5J
4 5C
GR
12
MPD2
MPD1
3
G 1
Gateway ECU
GR
8 5C
8 5G
P
13 5D
13 5G
P
7
MPX1
MPX2
24
P 6
Power Source Control ECU
B

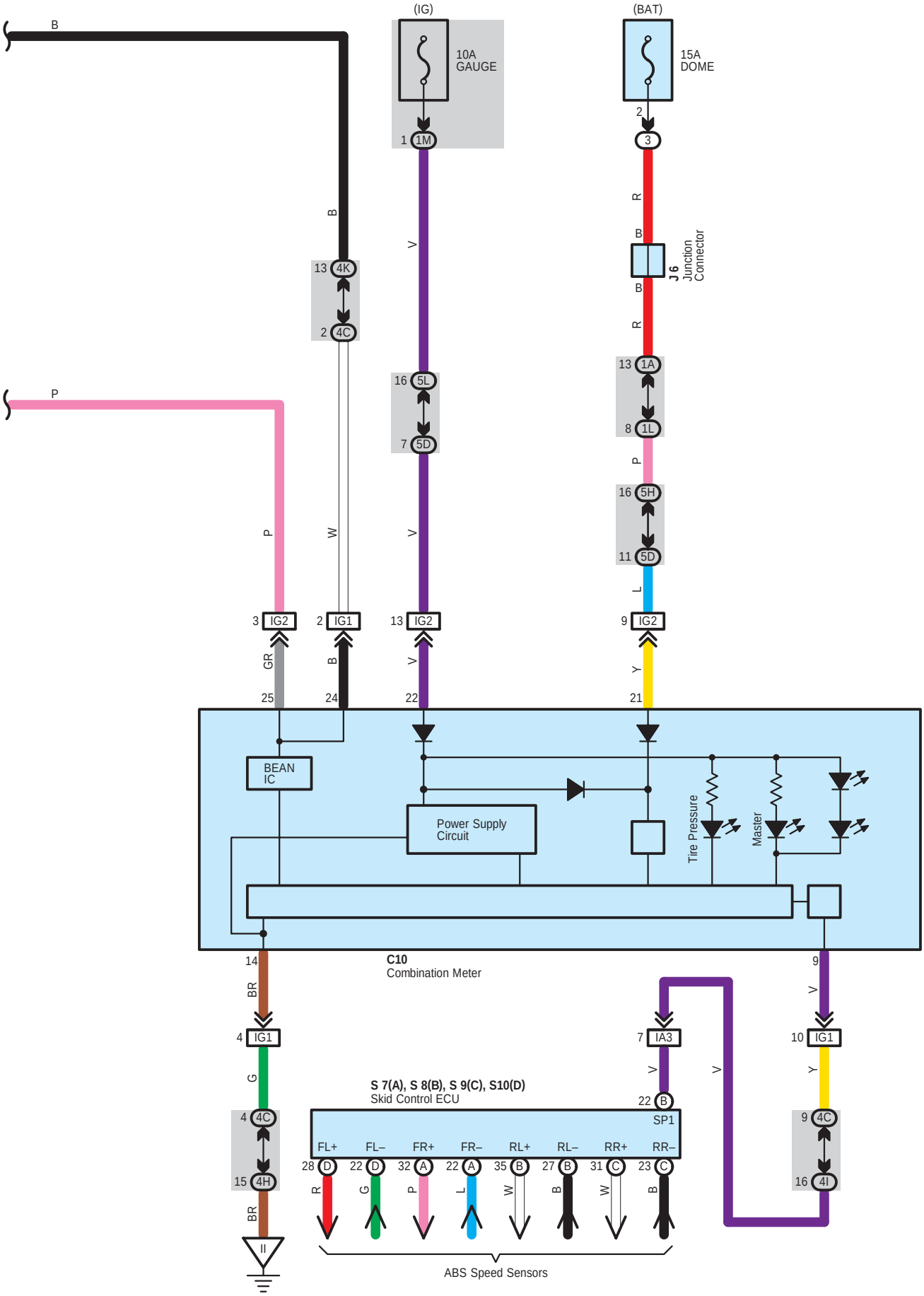
(IG)
(BAT)
10A
GAUGE
15A
DOME
J6
Junction
Connector
BEAN
IC
Power Supply
Circuit
Tire Pressure
Master
C10
Combination Meter
S 7(A), S 8(B), S 9(C), S10(D)
Skid Control ECU
FL+
FL–
FR+
FR–
RL+
RL–
RR+
RR–
SP1
ABS Speed Sensors

System Outline

* In the tire pressure warning system, the warning light illuminates to alert the driver about the low tire pressure when the vehicle continues driving with one of the four tires under such low pressure to cause possible driving disturbance.
* The air pressure sensors installed in the wheels measure air pressure in the tires directly.

: Parts Location

Code	See Page	Code	See Page	Code	See Page
A8	48	J25	50	T4	51
B5 A	48	P6	51	T5	51
C10	49	S7 A	51	T10	55
G1	49	S8 B	51	T11	51
J6	50	S9 C	51	T12	51
J20 A	50	S10 D	51		
J21 B	50	S11	51		

: Relay Blocks

Code	See Page	Relay Blocks (Relay Block Location)
3	22	Engine Room R/B (Engine Compartment Left)

: Junction Block and Wire Harness Connector

Code	See Page	Junction Block and Wire Harness (Connector Location)
1A	30	Engine Room Main Wire and Driver Side J/B (Lower Finish Panel)
1G	30	Instrument Panel Wire and Driver Side J/B (Lower Finish Panel)
1L	31	
1M		
4C	38	Instrument Panel Wire and Center Connector No.1 (Behind the Combination Meter)
4D		
4F		
4H		
4I		
4K		
4L		
5C	42	Instrument Panel Wire and Center Connector No.2 (Instrument Panel Brace RH)
5D		
5E		
5G		
5H		
5J		
5K		
5L		

: Connector Joining Wire Harness and Wire Harness

Code	See Page	Joining Wire Harness and Wire Harness (Connector Location)
IA3	58	Engine Room Main Wire and Instrument Panel Wire (Upper Parts of Front Body Pillar LH)
IG1	59	Instrument Panel Wire and Instrument Panel No.2 Wire (Behind the Combination Meter)
IG2		
II1	59	Engine Wire and Instrument Panel Wire (Behind the Glove Box)
IM2	59	Instrument Panel Wire and Floor No.2 Wire (Right Kick Panel)

: Ground Points

Code	See Page	Ground Points Location
IH	58	Cowl Side Panel LH
II	58	Instrument Panel Brace LH

NOTICE: When inspecting or repairing the SRS, perform service in accordance with the following precautionary instructions and the procedure, and precautions in the Repair Manual applicable for the model year.

- Malfunction symptoms of the SRS are difficult to confirm, so the DTCs become the most important source of information when troubleshooting. When troubleshooting the SRS, always inspect the DTCs before disconnecting the battery.
- **Work must be started more than 90 seconds after the power SW is pushed to the "OFF" position and the negative (–) terminal cable is disconnected from the battery.**
  (The SRS is equipped with a back–up power source so that if work is started within 90 seconds from disconnecting the negative (–) terminal cable of the battery, the SRS may deploy.)
- When the negative (–) terminal cable is disconnected from the battery, the memory of the clock and audio system will be cleared. So before starting work, make a record of the contents in the audio memory system. When work is finished, reset the audio systems as they were before and adjust the clock. Some vehicles have power tilt steering, power telescopic steering, power seat and power outside rear view mirror which are all equipped with memory function. However, it is not possible to make a record of these memory contents. So when the work is finished, it will be necessary to explain it to your customer, and ask the customer to adjust the features and reset the memory. To avoid erasing the memory in each system, never use a back–up power supply from outside the vehicle.
- Before repair, remove the airbag sensor if shocks are likely to be applied to the sensor during repair.
- Do not expose the following parts directly to hot air or flame;
- Even in cases of a minor collision where the SRS does not deploy, the following parts should be inspected;
- Never use SRS parts from another vehicle. When replacing parts, replace with new parts.
- For the purpose of reuse, never disassemble and repair the following parts.
- If the following parts have been dropped, or have cracks, dents and other defects in their case, bracket, and connector, replace with new one.
- Use a volt/ohmmeter with high impedance (10 kΩ/V minimum) for troubleshooting electrical circuits of the system.
- Information labels are attached to the periphery of the SRS components. Follow the instructions of the notice.
- After work on the SRS is completed, check the SRS warning light.
- If the vehicle is equipped with a mobile communication system, refer to the precaution in the IN section of the Repair Manual.

* Steering wheel pad
* Front passenger airbag assembly
* Side airbag assembly
* Curtain shield airbag assembly
* Seat belt pretensioner
* Center airbag sensor assembly
* Front airbag sensor assembly
* Side airbag sensor assembly
* Rear airbag sensor assembly

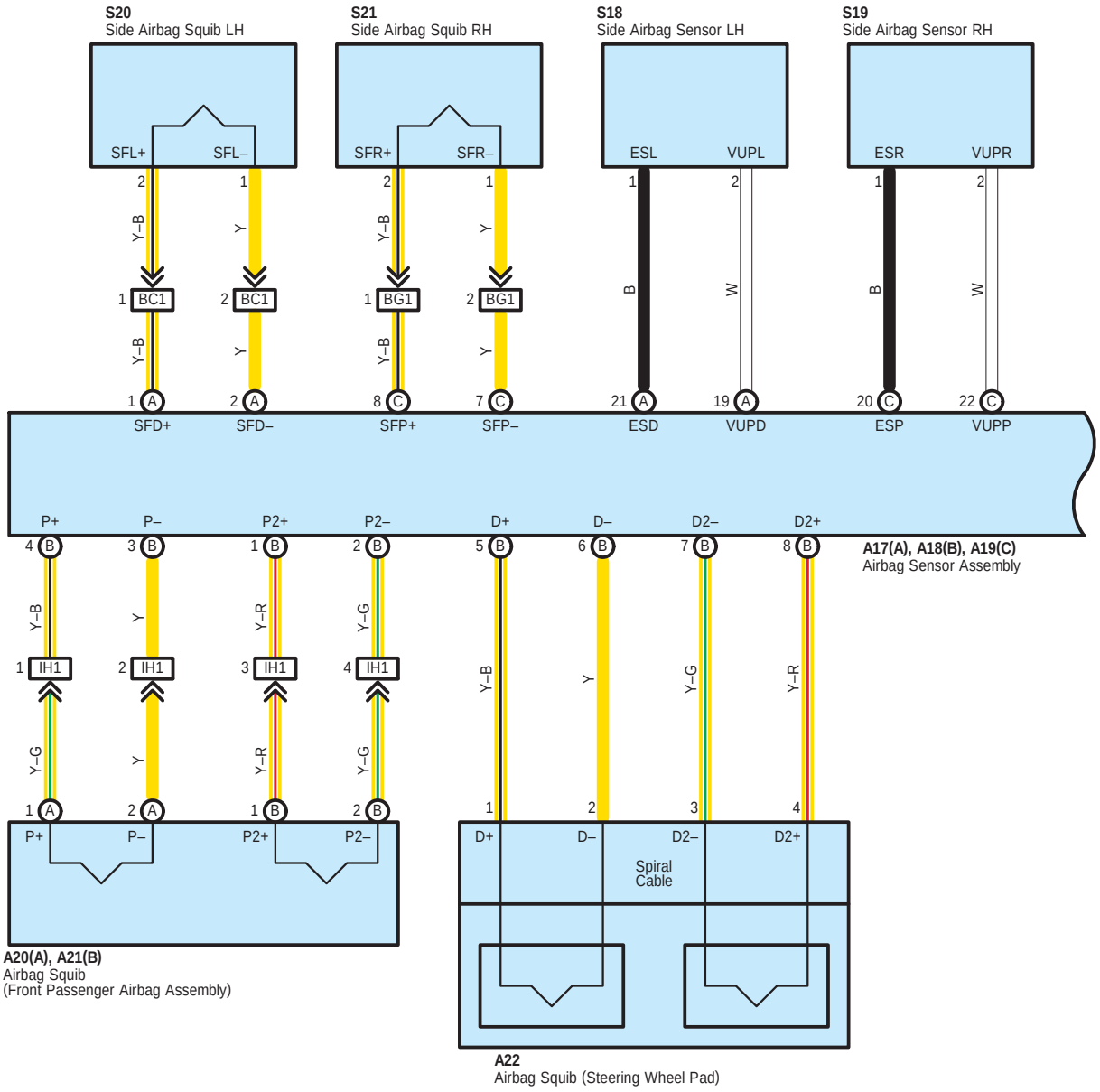
S20
Side Airbag Squib LH
S21
Side Airbag Squib RH
S18
Side Airbag Sensor LH
S19
Side Airbag Sensor RH
SFL+
SFL–
SFR+
SFR–
ESL
VUPL
ESR
VUPR
Y–B
Y
B
W
BC1
BG1
SFD+
SFD–
SFP+
SFP–
ESD
VUPD
ESP
VUPP
P+
P–
P2+
P2–
D+
D–
D2–
D2+
IH1
A17(A), A18(B), A19(C)
Airbag Sensor Assembly
Y–G
Y–R
A20(A), A21(B)
Airbag Squib
(Front Passenger Airbag Assembly)
Spiral
Cable
A22
Airbag Squib (Steering Wheel Pad)

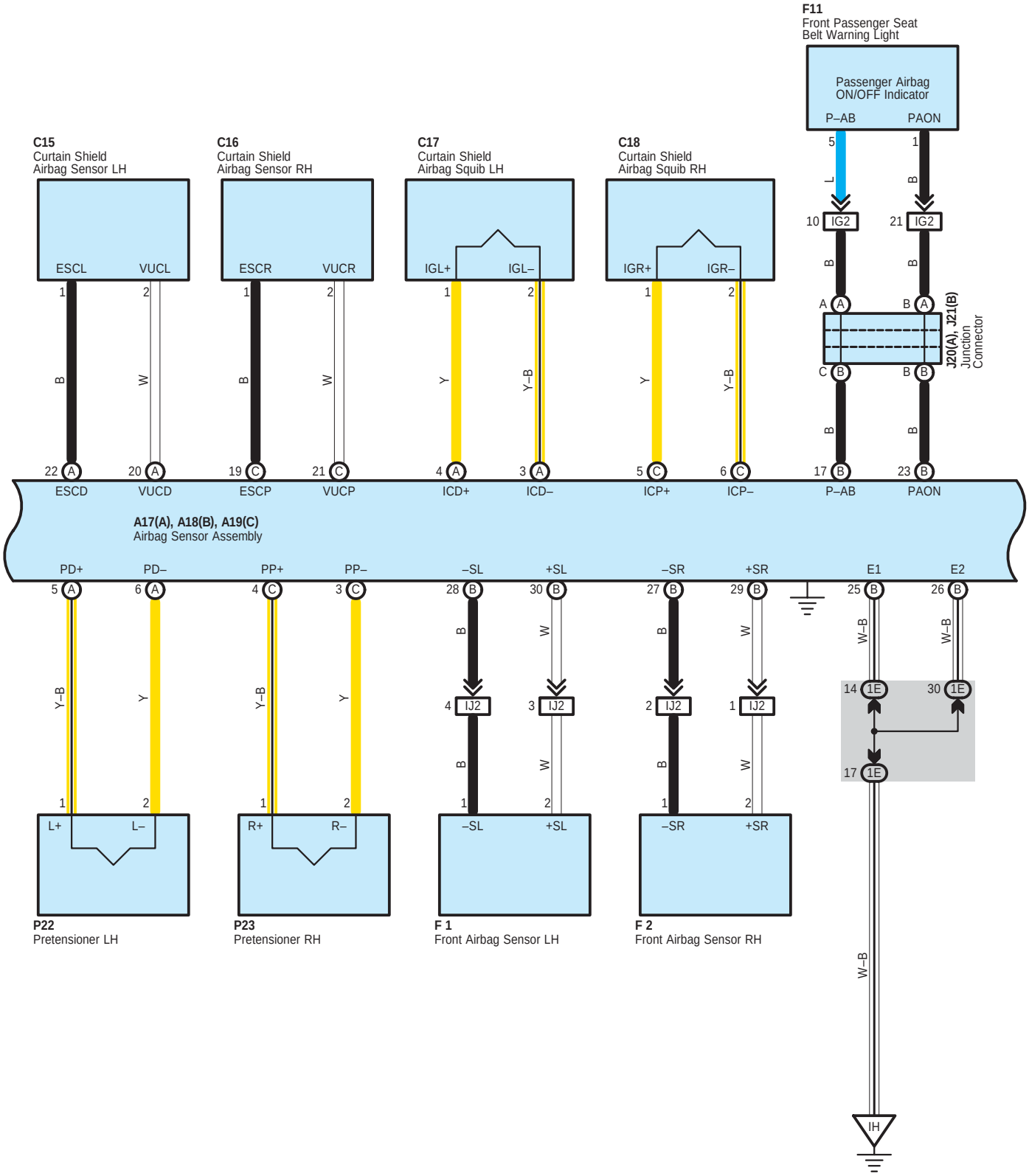
C15
Curtain Shield
Airbag Sensor LH
ESCL
VUCL
C16
Curtain Shield
Airbag Sensor RH
ESCR
VUCR
C17
Curtain Shield
Airbag Squib LH
IGL+
IGL–
C18
Curtain Shield
Airbag Squib RH
IGR+
IGR–
F11
Front Passenger Seat
Belt Warning Light
Passenger Airbag
ON/OFF Indicator
P–AB
PAON
IG2
J20(A), J21(B)
Junction
Connector
ESCD
VUCD
ESCP
VUCP
ICD+
ICD–
ICP+
ICP–
A17(A), A18(B), A19(C)
Airbag Sensor Assembly
PD+
PD–
PP+
PP–
–SL
+SL
–SR
+SR
E1
E2
IJ2
1E
IH
P22
Pretensioner LH
L+
L–
P23
Pretensioner RH
R+
R–
F 1
Front Airbag Sensor LH
F 2
Front Airbag Sensor RH

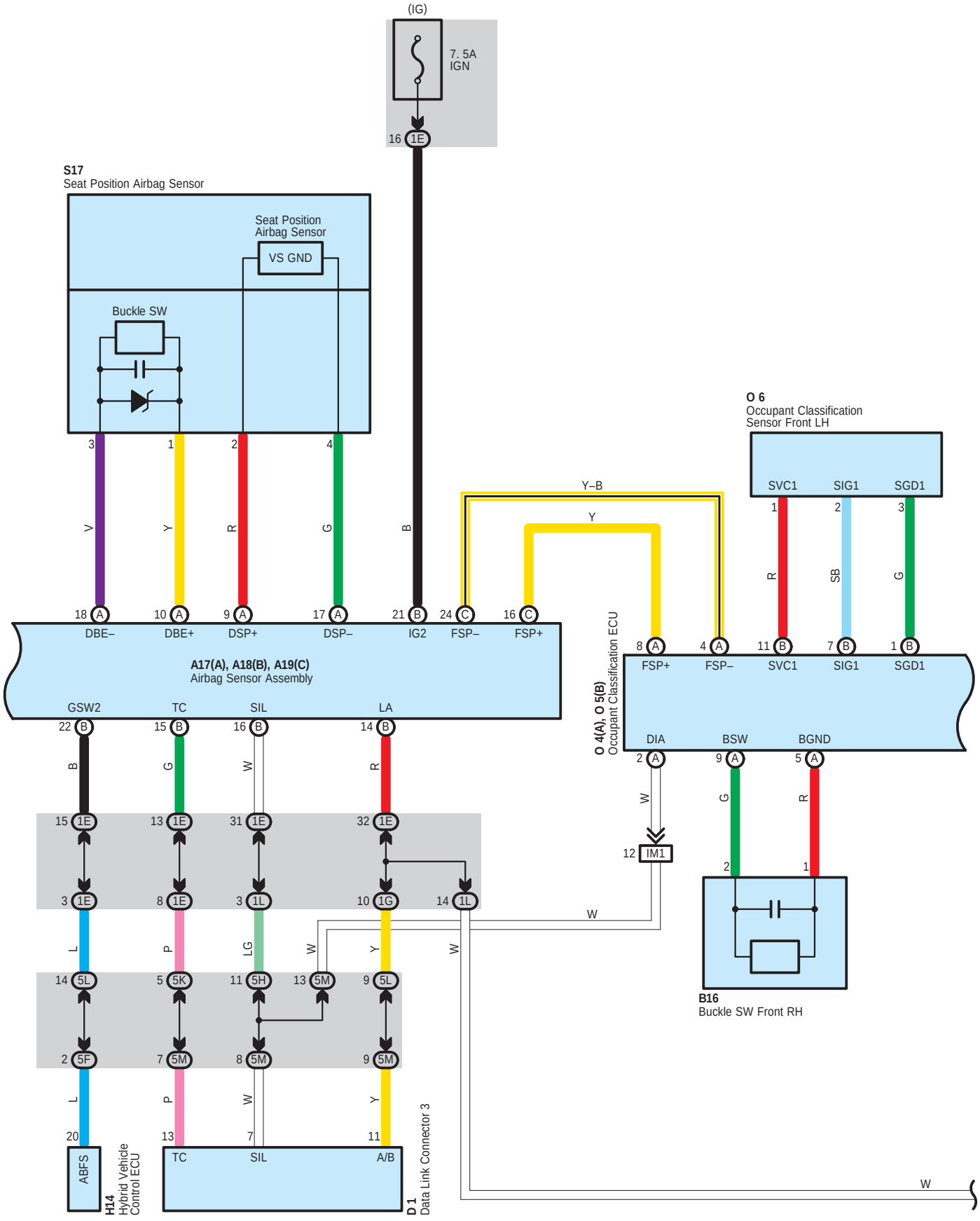
(IG)
7. 5A
IGN
16 1E
S17
Seat Position Airbag Sensor
Seat Position
Airbag Sensor
VS GND
Buckle SW
3 1 2 4
V Y R G B
Y–B
Y
O 6
Occupant Classification
Sensor Front LH
SVC1 SIG1 SGD1
1 2 3
R SB G
18 A 10 A 9 A 17 A 21 B 24 C 16 C
DBE– DBE+ DSP+ DSP– IG2 FSP– FSP+
A17(A), A18(B), A19(C)
Airbag Sensor Assembly
8 A 4 A 11 B 7 B 1 B
FSP+ FSP– SVC1 SIG1 SGD1
O 4(A), O 5(B)
Occupant Classification ECU
DIA BSW BGND
2 A 9 A 5 A
W G R
12 IM1
GSW2 TC SIL LA
22 B 15 B 16 B 14 B
B G W R
15 1E 13 1E 31 1E 32 1E
3 1E 8 1E 3 1L 10 1G 14 1L
L P LG W Y W
14 5L 5 5K 11 5H 13 5M 9 5L
2 5F 7 5M 8 5M 9 5M
L P W Y
20 13 7 11
ABFS
H14
Hybrid Vehicle
Control ECU
TC SIL A/B
D 1
Data Link Connector 3
2 1
B16
Buckle SW Front RH
W
W
W

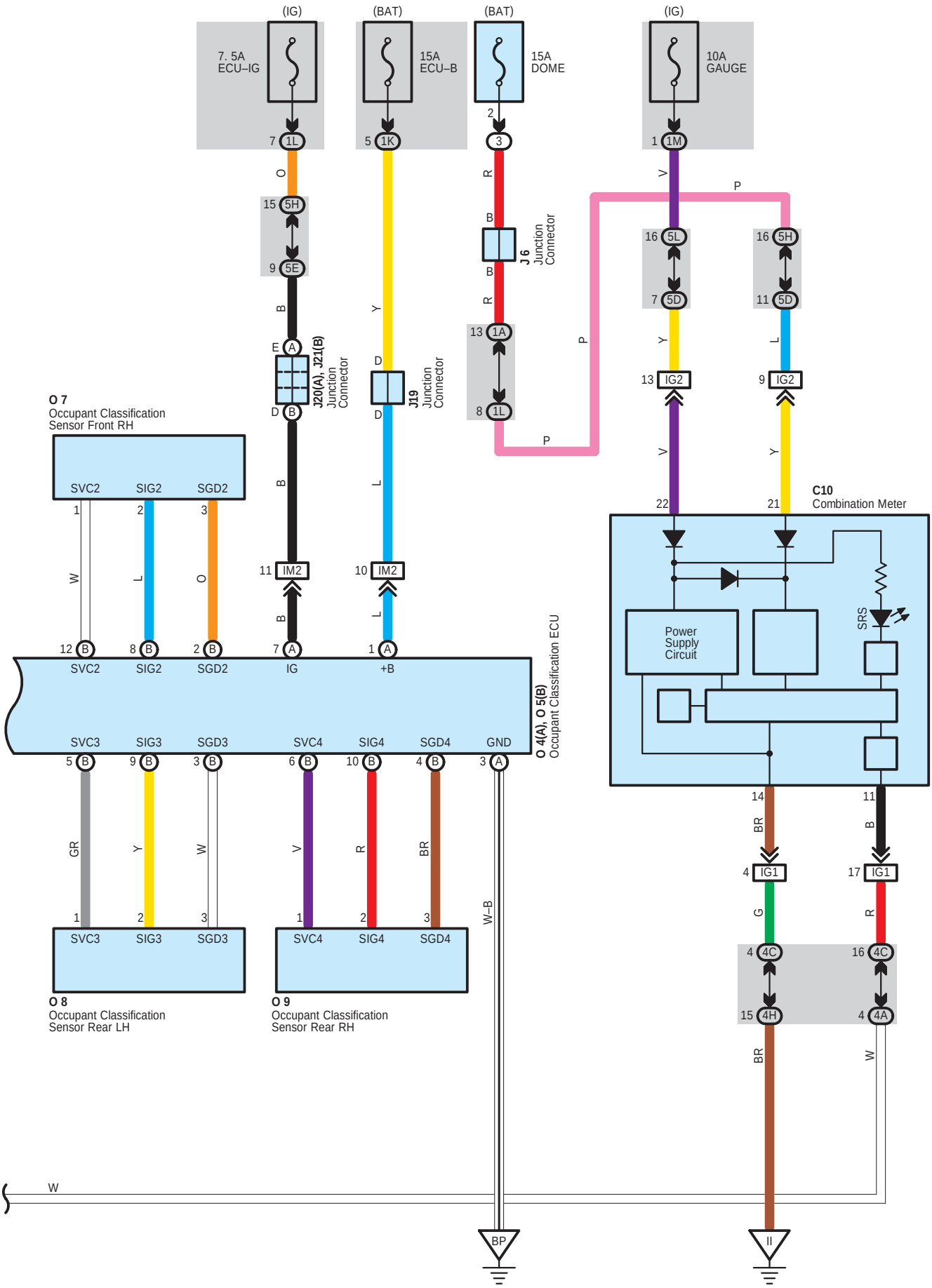
(IG)
7. 5A
ECU–IG
7 1L
(BAT)
15A
ECU–B
5 1K
(BAT)
15A
DOME
2 3
(IG)
10A
GAUGE
1 1M
R
B
J6
Junction
Connector
B
R
13 1A
8 1L
P
P
V
P
16 5L
7 5D
16 5H
11 5D
Y
L
13 IG2
9 IG2
V
Y
22
21
C10
Combination Meter
Power
Supply
Circuit
SRS
15 5H
9 5E
B
E A
D B
J20(A), J21(B)
Junction
Connector
Y
D
D
J19
Junction
Connector
L
11 IM2
10 IM2
B
L
O 7
Occupant Classification
Sensor Front RH
SVC2
SIG2
SGD2
1
2
3
W
L
O
12 B
8 B
2 B
7 A
1 A
SVC2
SIG2
SGD2
IG
+B
O 4(A), O 5(B)
Occupant Classification ECU
SVC3
SIG3
SGD3
SVC4
SIG4
SGD4
GND
5 B
9 B
3 B
6 B
10 B
4 B
3 A
GR
Y
W
V
R
BR
W–B
1
2
3
1
2
3
SVC3
SIG3
SGD3
SVC4
SIG4
SGD4
O 8
Occupant Classification
Sensor Rear LH
O 9
Occupant Classification
Sensor Rear RH
14
11
BR
B
4 IG1
17 IG1
G
R
4 4C
16 4C
15 4H
4 4A
BR
W
W
BP
II

System Outline

* The system reaches an ignition judgment to deploy the following device based on the signals received from the front airbag sensor and deceleration sensor.
  – Driver Airbag
  – Front Passenger Airbag
  – Seat Belt Pretensioner
* The system reaches an ignition judgment to deploy the following device based on the signals received from the side airbag sensors.
  – Side Airbags
  – Curtain Shield Airbags
* The dual–stage SRS airbag system has been used for the driver and front passenger airbags. This system controls the optimal airbag inflation by judging the extent of impact, seat position (driver seat) and whether or not the seat belt is fastened (driver seat) and information from the front passenger occupant classification system.
* The front passenger occupant classification system judges whether the front passenger seat is occupied by an adult or child (with child seat) or is unoccupied, according to the load applied to the front passenger seat and whether the seat belt is buckled. Based on the results, it restricts the deployment of the front passenger airbag, front passenger side airbag, and front passenger seat belt pretensioner. In addition, the system informs the driver of the result of the judgment through the use of the AIRBAG ON/OFF indicator lights.
* The airbag sensor assembly transmits a signal to the hybrid vehicle control ECU in order to stop the fuel pump.
* The airbag sensor assembly transmits a signal to the hybrid vehicle control ECU in order to control hybrid high voltage cut off.

○ : Parts Location

Code		See Page	Code		See Page	Code	See Page
A17	A	48	D1		49	O7	54
A18	B	48	F1		46	O8	54
A19	C	48	F2		46	O9	54
A20	A	48	F11		49	P22	54
A21	B	48	H14		49	P23	54
A22		48	J6		50	S17	55
B16		52	J19		50	S18	55
C10		49	J20	A	50	S19	55
C15		52	J21	B	50	S20	55
C16		52	O4	A	54	S21	55
C17		52	O5	B	54		
C18		52	O6		54		

▭ : Relay Blocks

Code	See Page	Relay Blocks (Relay Block Location)
3	22	Engine Room R/B (Engine Compartment Left)

: **Junction Block and Wire Harness Connector**

Code	See Page	Junction Block and Wire Harness (Connector Location)
1A	30	Engine Room Main Wire and Driver Side J/B (Lower Finish Panel)
1E	30	Instrument Panel Wire and Driver Side J/B (Lower Finish Panel)
1F		
1G		
1K	31	
1L		
1M		
4A	38	Instrument Panel Wire and Center Connector No.1 (Behind the Combination Meter)
4C		
4H		
5D	42	Instrument Panel Wire and Center Connector No.2 (Instrument Panel Brace RH)
5E		
5F		
5H		
5K		
5L		
5M		

: **Connector Joining Wire Harness and Wire Harness**

Code	See Page	Joining Wire Harness and Wire Harness (Connector Location)
IG1	59	Instrument Panel Wire and Instrument Panel No.2 Wire (Behind the Combination Meter)
IG2		
IH1	59	Instrument Panel Wire and Instrument Panel No.1 Wire (Behind the Glove Box)
IJ2	59	Engine Room Main Wire and Instrument Panel Wire (Behind the Glove Box)
IM1	59	Instrument Panel Wire and Floor No.2 Wire (Right Kick Panel)
IM2		
BC1	60	Floor Wire and Seat Airbag No.1 Wire (Under the Driver's Seat)
BG1	60	Floor No.2 Wire and Seat Airbag No.2 Wire (Under the Front Passenger's Seat)

: **Ground Points**

Code	See Page	Ground Points Location
IH	58	Cowl Side Panel LH
II	58	Instrument Panel Brace LH
BP	60	Front Side of Right Quarter Panel

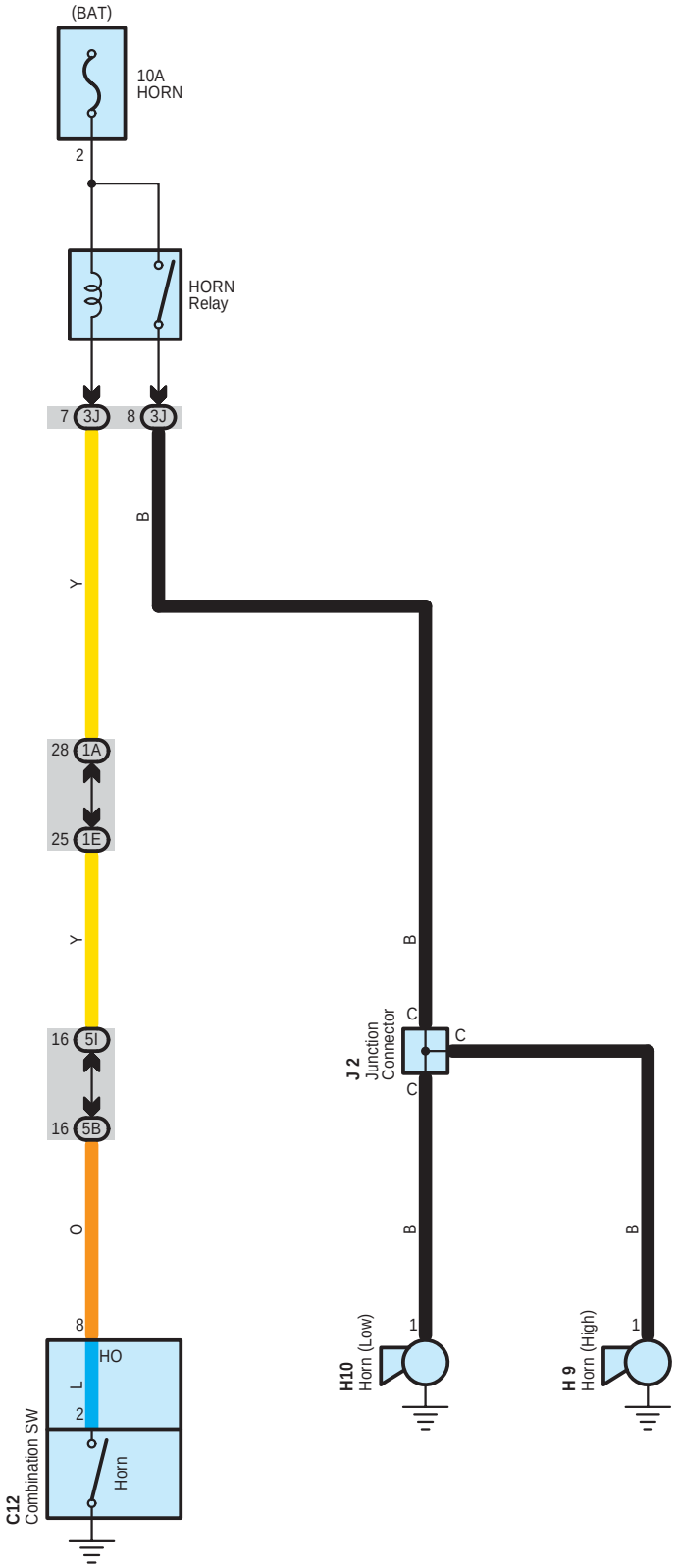
(BAT)
10A
HORN
2
HORN
Relay
7 3J
8 3J
B
Y
28 1A
25 1E
Y
16 5I
16 5B
O
8
HO
L
2
Horn
C12
Combination SW
B
C
C
J 2
Junction
Connector
C
B
B
1
H10
Horn (Low)
1
H 9
Horn (High)

○ : **Parts Location**

Code	See Page	Code	See Page	Code	See Page
C12	49	H10	46		
H9	46	J2	47		

: **Junction Block and Wire Harness Connector**

Code	See Page	Junction Block and Wire Harness (Connector Location)
1A	30	Engine Room Main Wire and Driver Side J/B (Lower Finish Panel)
1E	30	Instrument Panel Wire and Driver Side J/B (Lower Finish Panel)
3J	24	Engine Room Main Wire and Engine Room J/B (Engine Compartment Left)
5B	42	Instrument Panel Wire and Center Connector No.2 (Instrument Panel Brace RH)
5I		

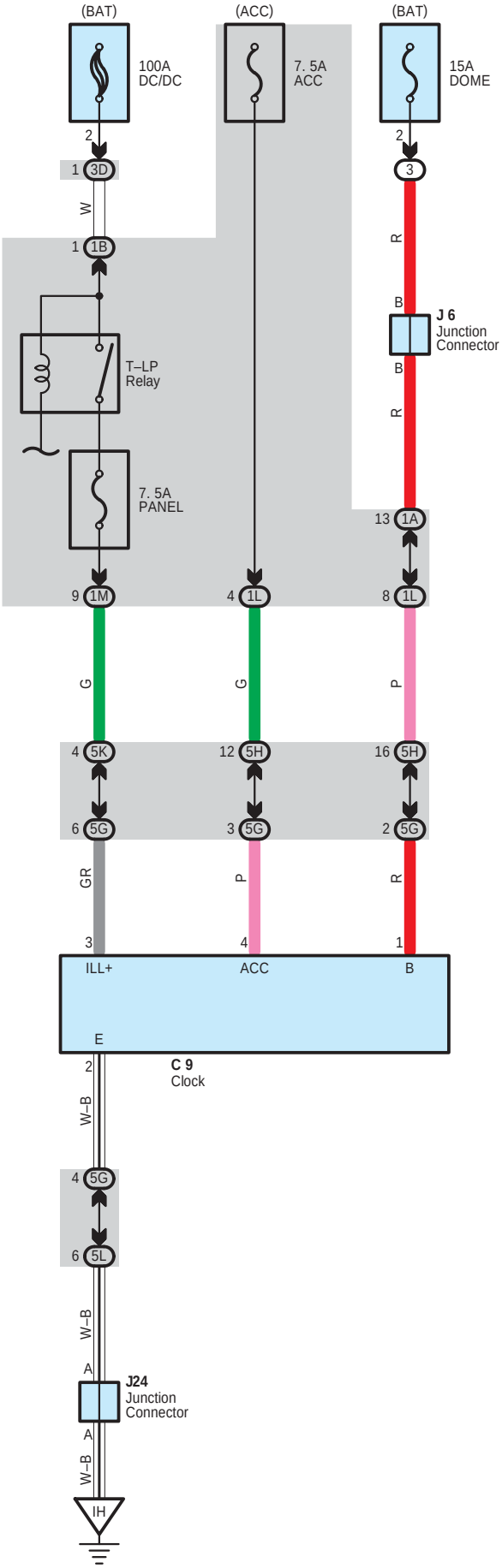
(BAT)
(ACC)
(BAT)
100A
DC/DC
7. 5A
ACC
15A
DOME
2
1 3D
3
W
R
1 1B
B
J 6
Junction
Connector
B
R
T–LP
Relay
7. 5A
PANEL
13 1A
9 1M
4 1L
8 1L
G
G
P
4 5K
12 5H
16 5H
6 5G
3 5G
2 5G
GR
P
R
3
4
1
ILL+
ACC
B
E
2
C 9
Clock
W–B
4 5G
6 5L
W–B
A
J24
Junction
Connector
A
W–B
IH

: Parts Location

Code	See Page	Code	See Page	Code	See Page
C9	49	J6	50	J24	50

: Relay Blocks

Code	See Page	Relay Blocks (Relay Block Location)
3	22	Engine Room R/B (Engine Compartment Left)

: Junction Block and Wire Harness Connector

Code	See Page	Junction Block and Wire Harness (Connector Location)
1A	30	Engine Room Main Wire and Driver Side J/B (Lower Finish Panel)
1B		
1L	31	Instrument Panel Wire and Driver Side J/B (Lower Finish Panel)
1M		
3D	23	Engine Room Main Wire and Engine Room J/B (Engine Compartment Left)
5G	42	Instrument Panel Wire and Center Connector No.2 (Instrument Panel Brace RH)
5H		
5K		
5L		

: Ground Points

Code	See Page	Ground Points Location
IH	58	Cowl Side Panel LH

＊1 : Separate Amplifier
＊2 : Built–in Amplifier

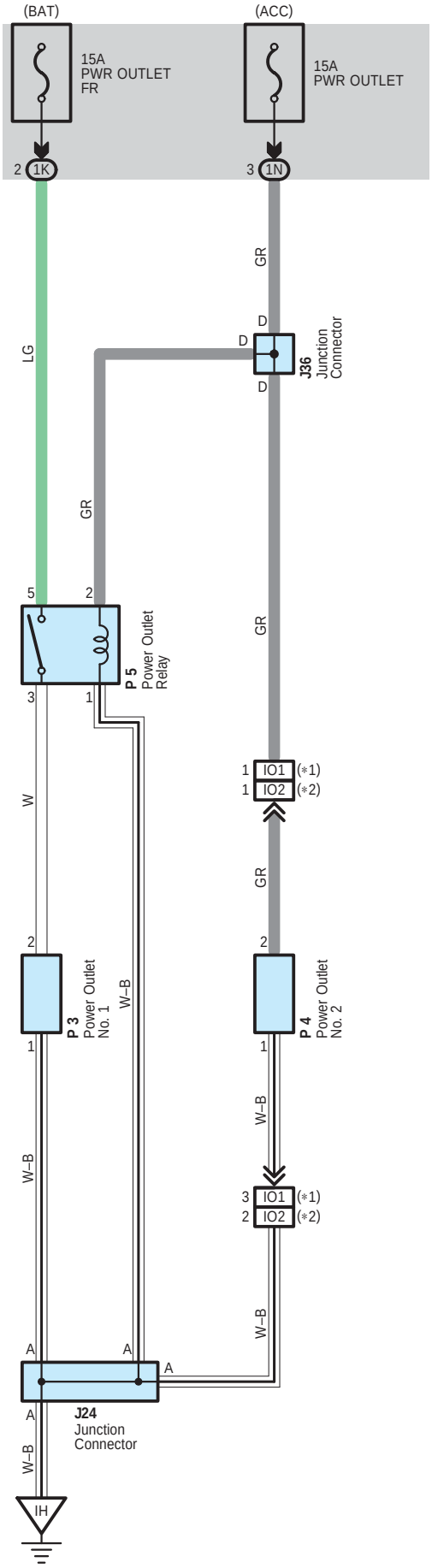

○ : Parts Location

Code	See Page	Code	See Page	Code	See Page
J24	50	P3	51	P5	51
J36	50	P4	51		

: Junction Block and Wire Harness Connector

Code	See Page	Junction Block and Wire Harness (Connector Location)
1K	31	Instrument Panel Wire and Driver Side J/B (Lower Finish Panel)
1N		

: Connector Joining Wire Harness and Wire Harness

Code	See Page	Joining Wire Harness and Wire Harness (Connector Location)
IO1	59	Instrument Panel Wire and Instrument Panel No.4 Wire (Front Console Box LH)
IO2		

▽ : Ground Points

Code	See Page	Ground Points Location
IH	58	Cowl Side Panel LH

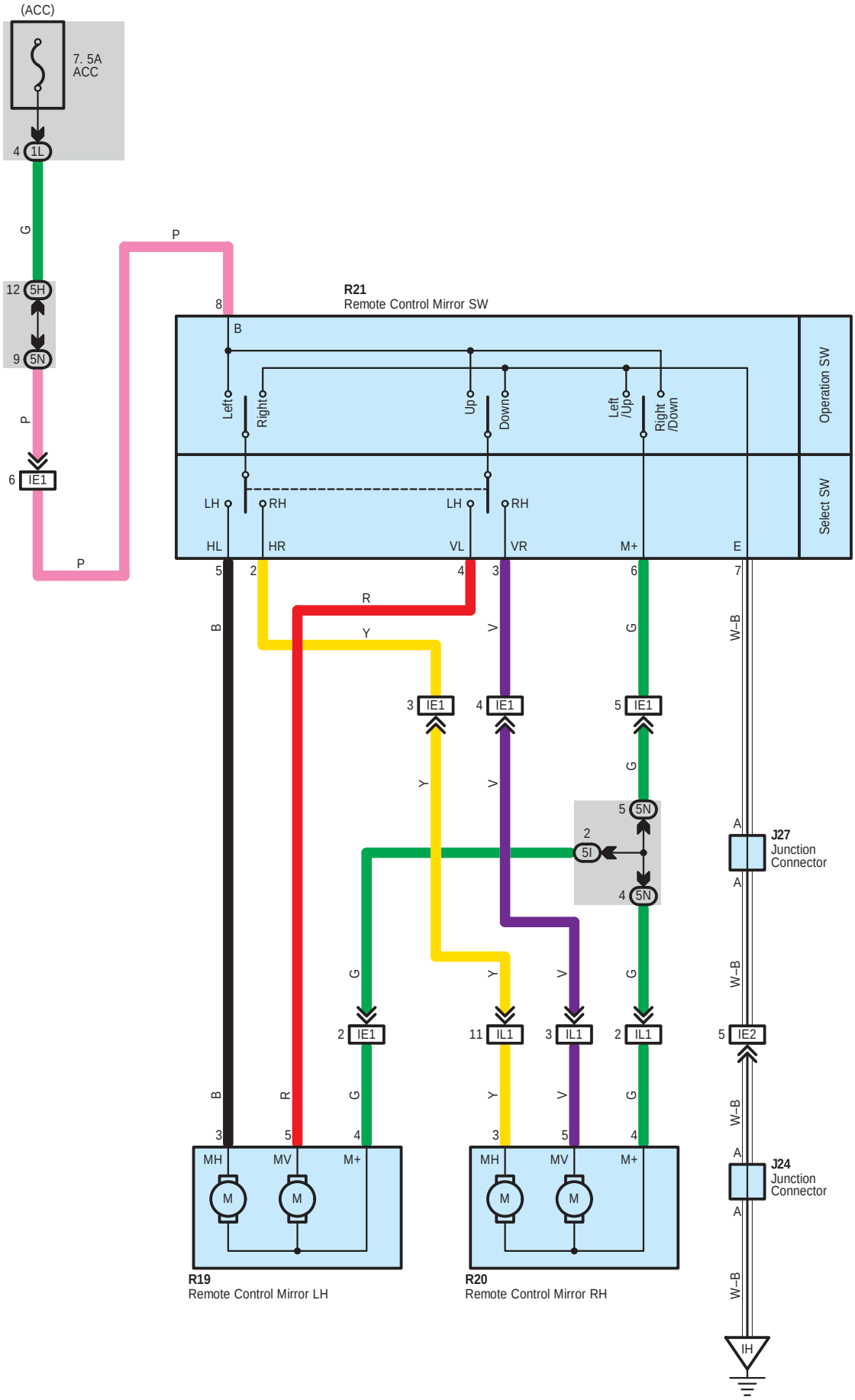
(ACC)
7. 5A
ACC
4 1L
G
12 5H
9 5N
P
6 IE1
P
P
8
R21
Remote Control Mirror SW
B
Left
Right
Up
Down
Left /Up
Right /Down
Operation SW
Select SW
LH
RH
LH
RH
HL
HR
VL
VR
M+
E
5
2
4
3
6
7
B
R
Y
V
G
W–B
3 IE1
4 IE1
5 IE1
Y
V
G
5 5N
2 5I
4 5N
A
J27
Junction
Connector
A
G
Y
V
G
W–B
2 IE1
11 IL1
3 IL1
2 IL1
5 IE2
B
R
G
Y
V
G
W–B
3
5
4
3
5
4
MH
MV
M+
MH
MV
M+
M
M
M
M
A
J24
Junction
Connector
A
W–B
IH
R19
Remote Control Mirror LH
R20
Remote Control Mirror RH

: Parts Location

Code	See Page	Code	See Page	Code	See Page
J24	50	R19	54	R21	54
J27	53	R20	54		

: Junction Block and Wire Harness Connector

Code	See Page	Junction Block and Wire Harness (Connector Location)
1L	31	Instrument Panel Wire and Driver Side J/B (Lower Finish Panel)
5H	42	Instrument Panel Wire and Center Connector No.2 (Instrument Panel Brace RH)
5I		
5N		

: Connector Joining Wire Harness and Wire Harness

Code	See Page	Joining Wire Harness and Wire Harness (Connector Location)
IE1	58	Front Door LH Wire and Instrument Panel Wire (Left Kick Panel)
IE2		
IL1	59	Front Door RH Wire and Instrument Panel Wire (Right Kick Panel)

: Ground Points

Code	See Page	Ground Points Location
IH	58	Cowl Side Panel LH

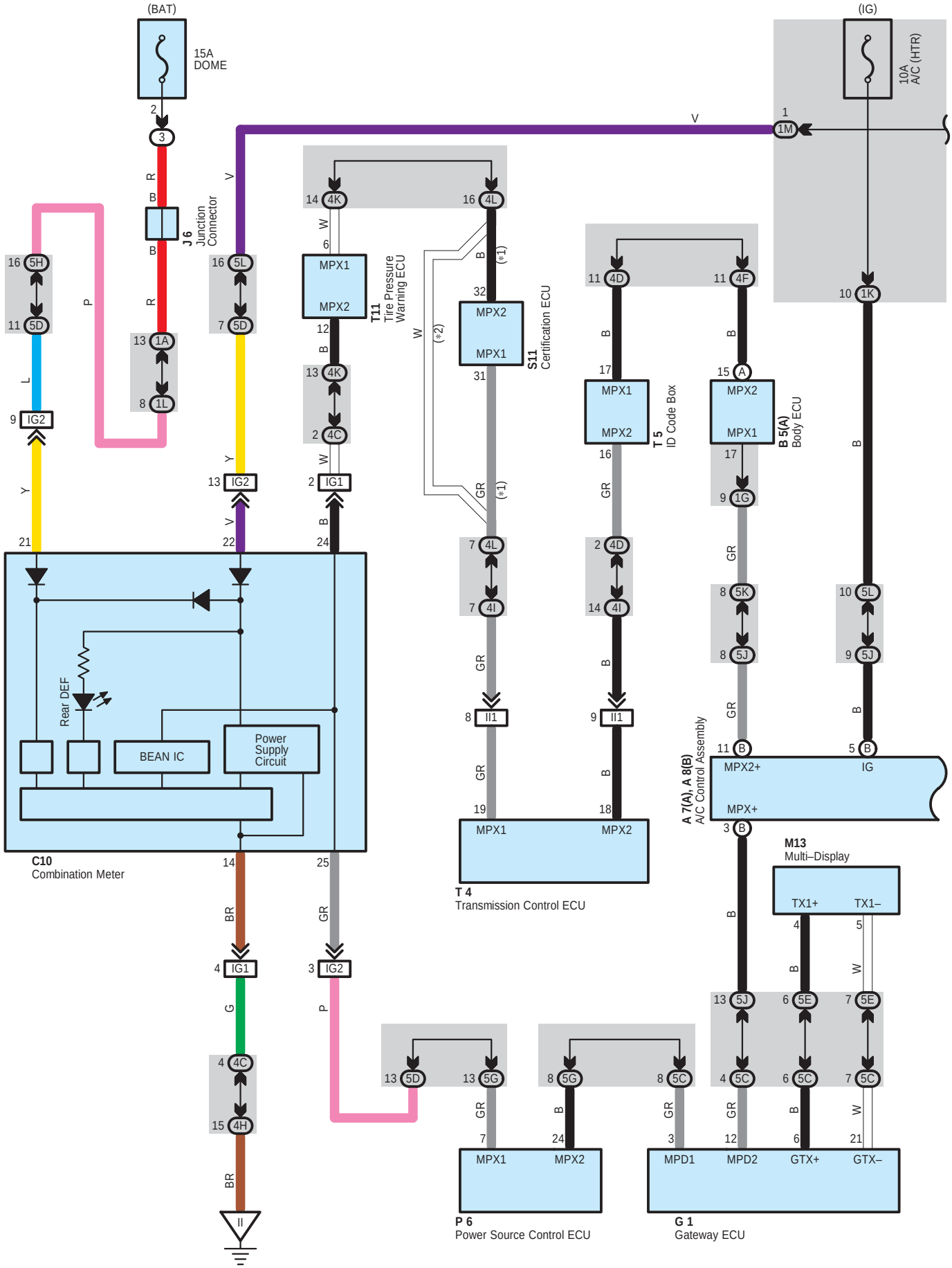
(BAT)
15A
DOME
(IG)
10A
A/C (HTR)
J 6
Junction
Connector
T11
Tire Pressure
Warning ECU
S11
Certification ECU
T 5
ID Code Box
B 5(A)
Body ECU
C10
Combination Meter
Rear DEF
BEAN IC
Power
Supply
Circuit
T 4
Transmission Control ECU
A 7(A), A 8(B)
A/C Control Assembly
M13
Multi–Display
P 6
Power Source Control ECU
G 1
Gateway ECU
MPX1
MPX2
MPX2+
MPX+
IG
IG1
IG2
TX1+
TX1–
MPD1
MPD2
GTX+
GTX–

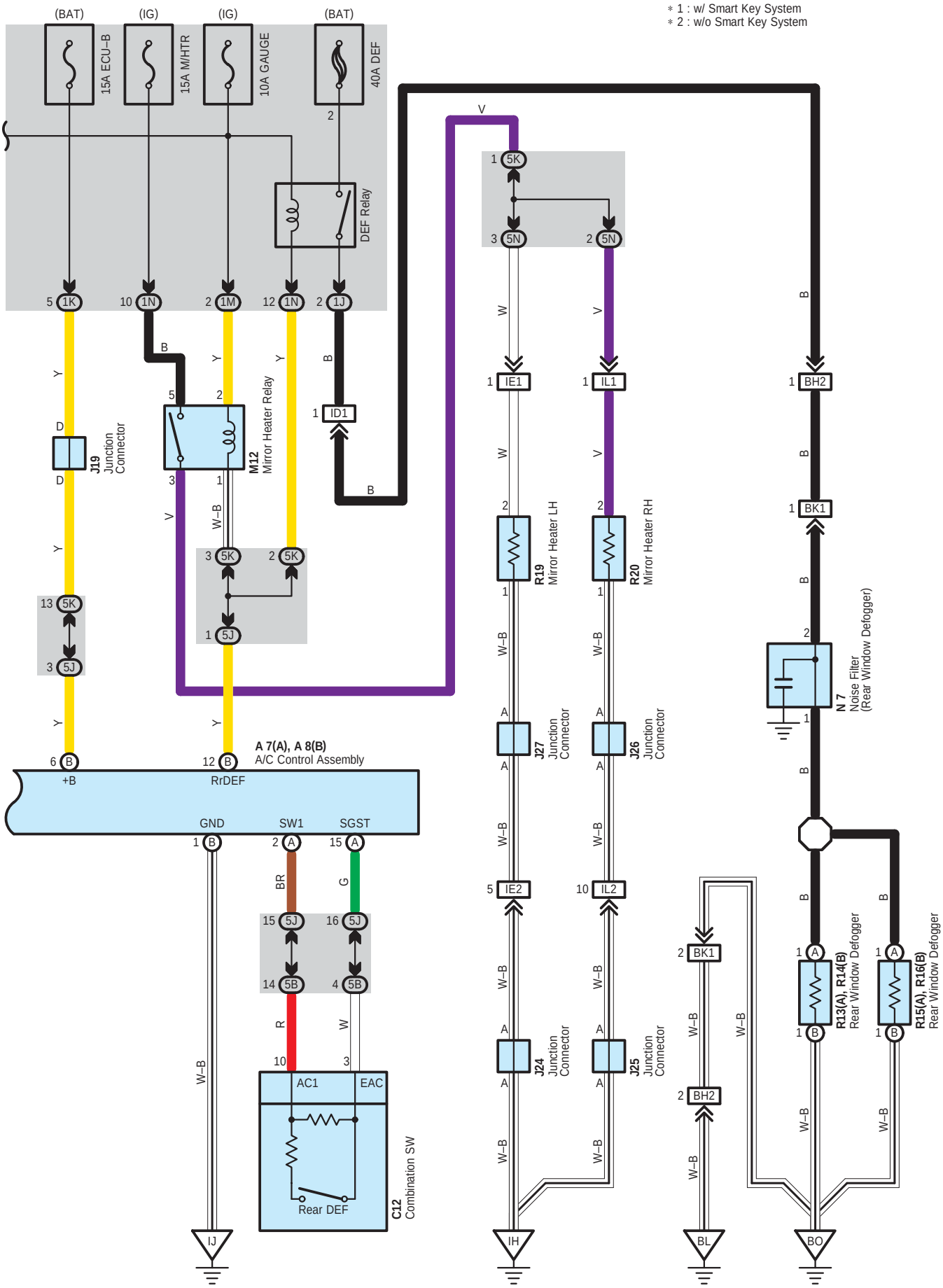
* 1 : w/ Smart Key System
* 2 : w/o Smart Key System
(BAT)
(IG)
(IG)
(BAT)
15A ECU–B
15A M/HTR
10A GAUGE
40A DEF
DEF Relay
J19 Junction Connector
M12 Mirror Heater Relay
A 7(A), A 8(B) A/C Control Assembly
+B
RrDEF
GND
SW1
SGST
C12 Combination SW
AC1
EAC
Rear DEF
R19 Mirror Heater LH
R20 Mirror Heater RH
J27 Junction Connector
J26 Junction Connector
J24 Junction Connector
J25 Junction Connector
N 7 Noise Filter (Rear Window Defogger)
R13(A), R14(B) Rear Window Defogger
R15(A), R16(B) Rear Window Defogger

Rear Window Defogger and Mirror Heater

System Outline

When power SW is at IG ON position, turning ON rear DEF SW on the steering wheel sends signal to A/C control assembly. Then A/C control assembly flows electricity in TERMINAL Rr DEF, which activates DEF relay and mirror heater relay. As a result, rear DEF SW and mirror heater is turned on.
Turning ON rear DEF SW of multi–display sends signal to A/C control assembly. Then the same action follows as above.
During rear window defogger and mirror heater in operation, signal is input in combination meter, lighting rear DEF indicator in combination meter.

: Parts Location

Code	See Page	Code	See Page	Code	See Page
A7 A	48	J25	50	R15 A	54
A8 B	48	J26	53	R16 B	54
B5 A	48	J27	53	R19	54
C10	49	M12	50	R20	54
C12	49	M13	50	S11	51
G1	49	N7	54	T4	51
J6	50	P6	51	T5	51
J19	50	R13 A	54	T11	51
J24	50	R14 B	54		

: Relay Blocks

Code	See Page	Relay Blocks (Relay Block Location)
3	22	Engine Room R/B (Engine Compartment Left)

: Junction Block and Wire Harness Connector

Code	See Page	Junction Block and Wire Harness (Connector Location)
1A	30	Engine Room Main Wire and Driver Side J/B (Lower Finish Panel)
1G	30	Instrument Panel Wire and Driver Side J/B (Lower Finish Panel)
1J		
1K	31	
1L		
1M		
1N		
4C	38	Instrument Panel Wire and Center Connector No.1 (Behind the Combination Meter)
4D		
4F		
4H		
4I		
4K		
4L		
5B	42	Instrument Panel Wire and Center Connector No.2 (Instrument Panel Brace RH)
5C		
5D		
5E		
5G		
5H		
5J		
5K		
5L		
5N		

: **Connector Joining Wire Harness and Wire Harness**

Code	See Page	Joining Wire Harness and Wire Harness (Connector Location)
ID1	58	Instrument Panel Wire and Floor Wire (Left Kick Panel)
IE1	58	Front Door LH Wire and Instrument Panel Wire (Left Kick Panel)
IE2		
IG1	59	Instrument Panel Wire and Instrument Panel No.2 Wire (Behind the Combination Meter)
IG2		
II1	59	Engine Wire and Instrument Panel Wire (Behind the Glove Box)
IL1	59	Front Door RH Wire and Instrument Panel Wire (Right Kick Panel)
IL2		
BH2	61	Back Door No.1 Wire and Floor Wire (Rear Side of Roof Panel)
BK1	61	Back Door No.1 Wire and Back Door No.2 Wire (Rear Side of Roof Panel)

: **Ground Points**

Code	See Page	Ground Points Location
IH	58	Cowl Side Panel LH
II	58	Instrument Panel Brace LH
IJ	58	Instrument Panel Brace RH
BL	60	Rear Side of Left Quarter Panel
BO	60	Center of the Back Door Panel

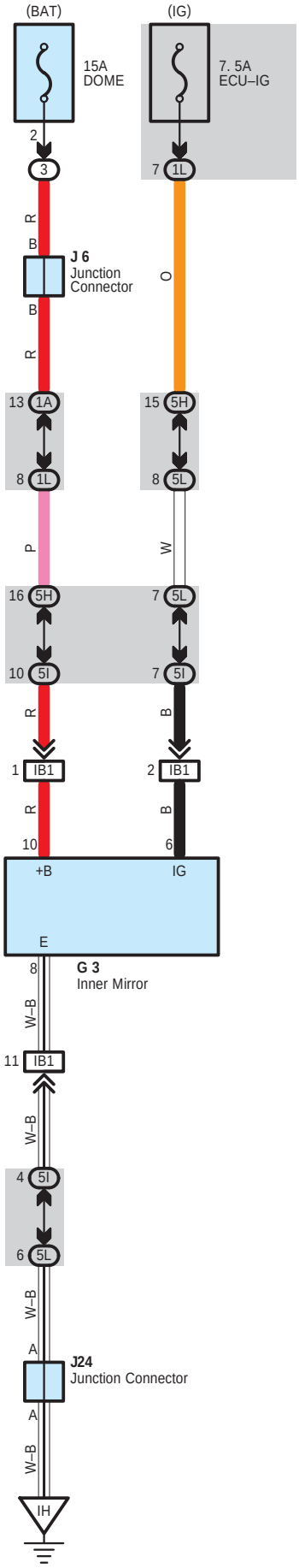
(BAT)
(IG)
15A
DOME
7. 5A
ECU–IG
2
3
7
1L
R
B
J 6
Junction
Connector
O
B
R
13
1A
8
1L
15
5H
8
5L
P
W
16
5H
10
5I
7
5L
7
5I
R
B
1
IB1
2
IB1
R
B
10
6
+B
IG
E
8
G 3
Inner Mirror
W–B
11
IB1
W–B
4
5I
6
5L
W–B
A
J24
Junction Connector
A
W–B
IH

: Parts Location

Code	See Page	Code	See Page	Code	See Page
G3	53	J6	50	J24	50

: Relay Blocks

Code	See Page	Relay Blocks (Relay Block Location)
3	22	Engine Room R/B (Engine Compartment Left)

: Junction Block and Wire Harness Connector

Code	See Page	Junction Block and Wire Harness (Connector Location)
1A	30	Engine Room Main Wire and Driver Side J/B (Lower Finish Panel)
1L	31	Instrument Panel Wire and Driver Side J/B (Lower Finish Panel)
5H	42	Instrument Panel Wire and Center Connector No.2 (Instrument Panel Brace RH)
5I		
5L		

: Connector Joining Wire Harness and Wire Harness

Code	See Page	Joining Wire Harness and Wire Harness (Connector Location)
IB1	58	Roof Wire and Instrument Panel Wire (Upper Parts of Front Body Pillar LH)

: Ground Points

Code	See Page	Ground Points Location
IH	58	Cowl Side Panel LH

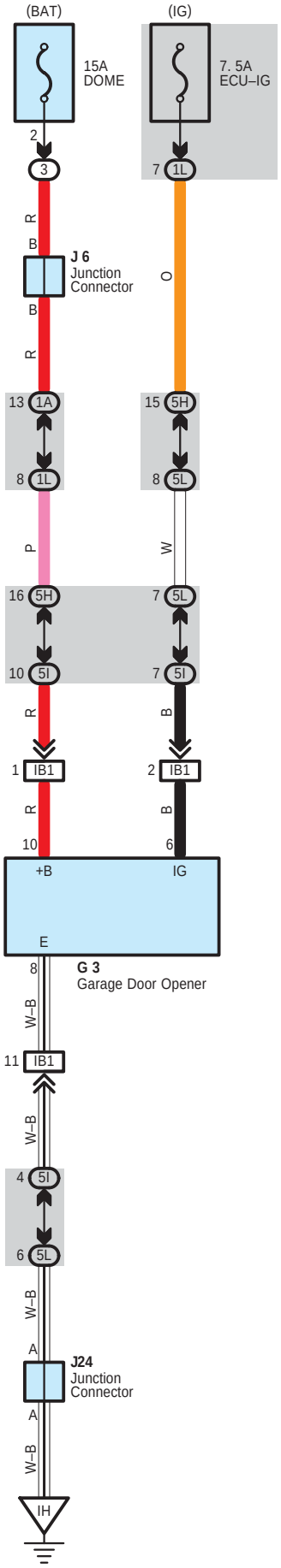
(BAT)
(IG)
15A
DOME
7. 5A
ECU–IG
2
3
7
1L
R
B
J 6
Junction
Connector
O
B
R
13
1A
8
1L
15
5H
8
5L
P
W
16
5H
10
5I
7
5L
7
5I
R
B
1
IB1
2
IB1
R
B
10
6
+B
IG
E
8
G 3
Garage Door Opener
W–B
11
IB1
W–B
4
5I
6
5L
W–B
A
J24
Junction
Connector
A
W–B
IH

: Parts Location

Code	See Page	Code	See Page	Code	See Page
G3	53	J6	50	J24	50

: Relay Blocks

Code	See Page	Relay Blocks (Relay Block Location)
3	22	Engine Room R/B (Engine Compartment Left)

: Junction Block and Wire Harness Connector

Code	See Page	Junction Block and Wire Harness (Connector Location)
1A	30	Engine Room Main Wire and Driver Side J/B (Lower Finish Panel)
1L	31	Instrument Panel Wire and Driver Side J/B (Lower Finish Panel)
5H	42	Instrument Panel Wire and Center Connector No.2 (Instrument Panel Brace RH)
5I		
5L		

: Connector Joining Wire Harness and Wire Harness

Code	See Page	Joining Wire Harness and Wire Harness (Connector Location)
IB1	58	Roof Wire and Instrument Panel Wire (Upper Parts of Front Body Pillar LH)

: Ground Points

Code	See Page	Ground Points Location
IH	58	Cowl Side Panel LH

Multi–Display and Audio System for Separate Amplifier

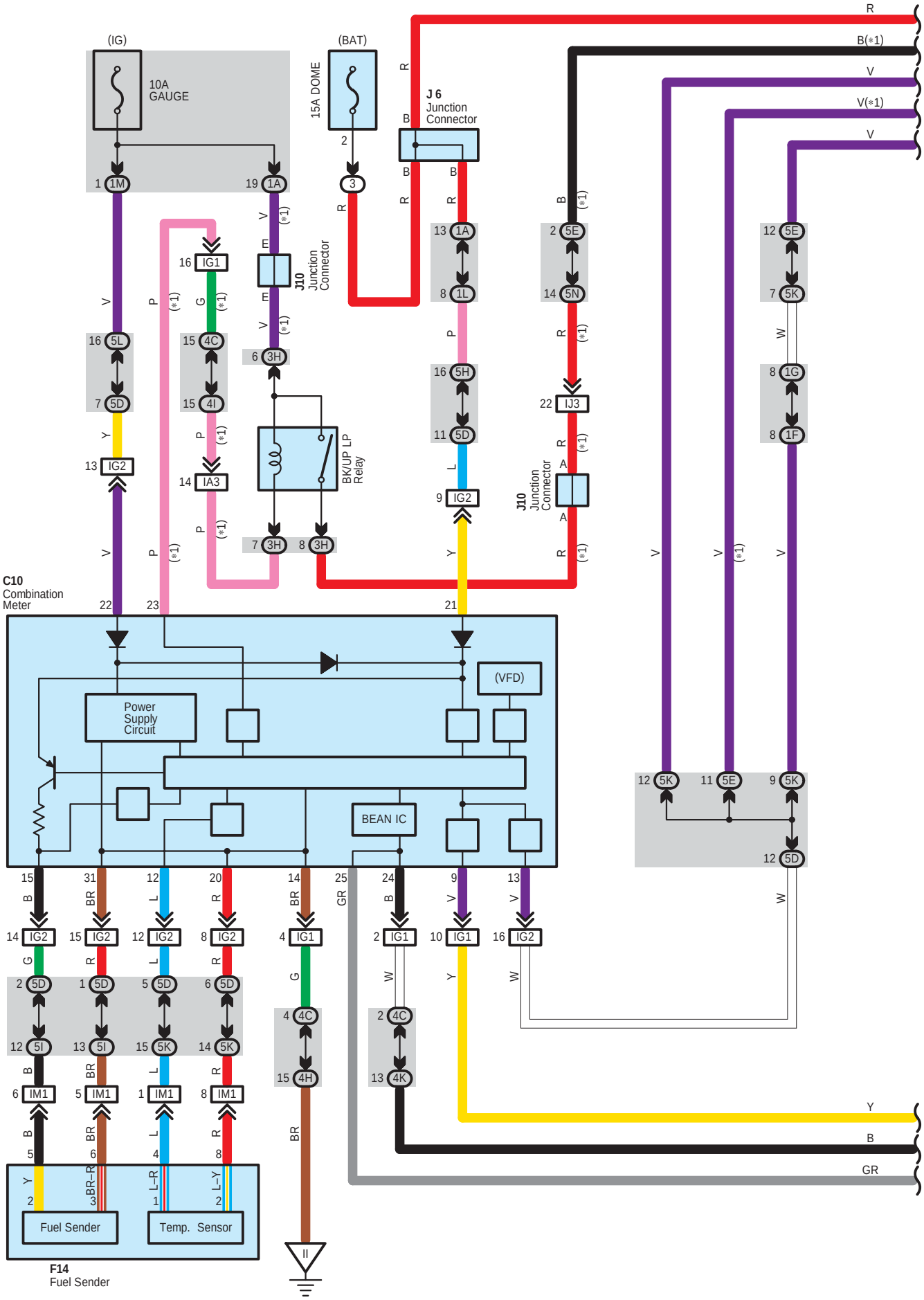

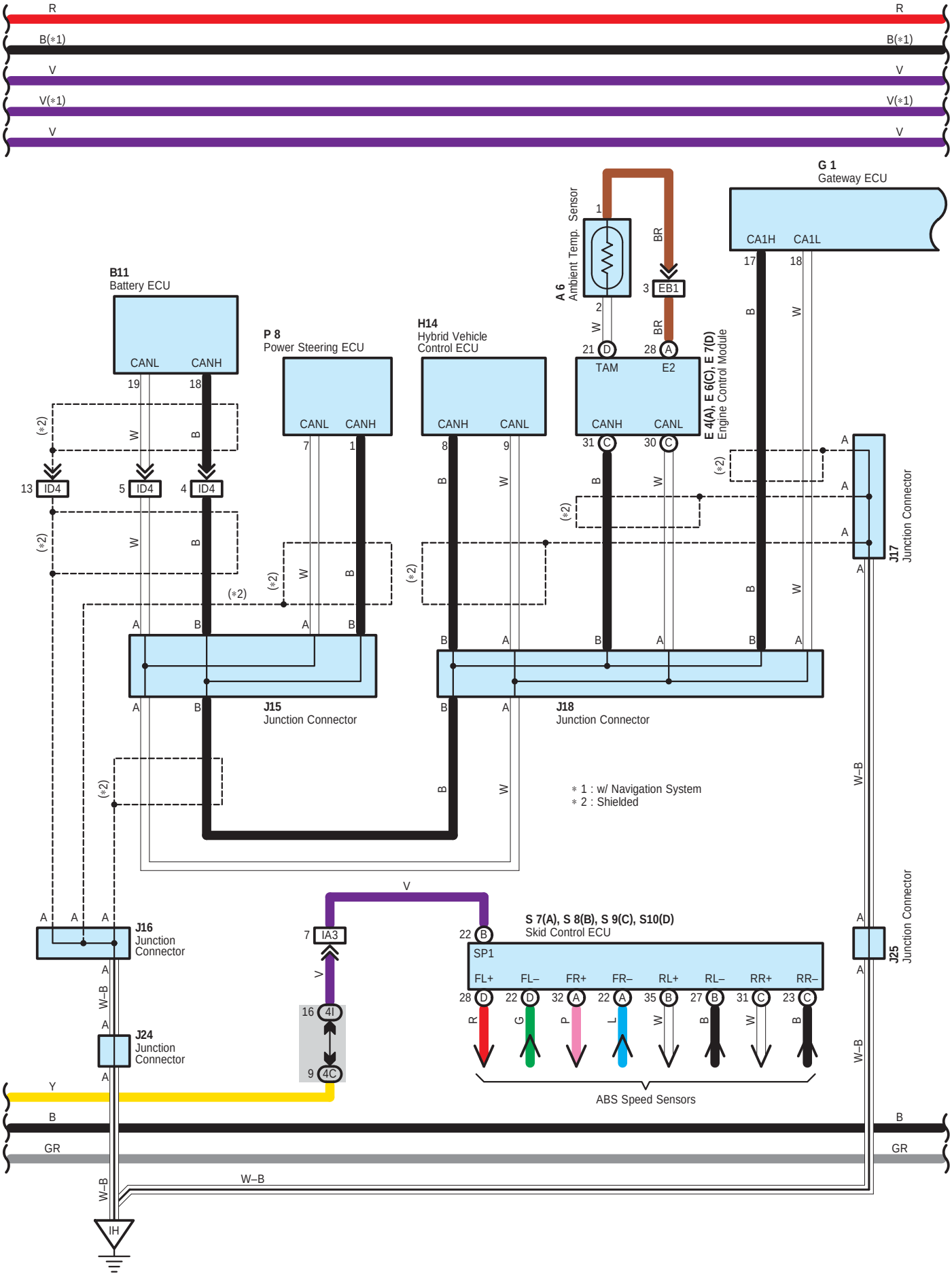
R
B(*1)
V
V(*1)
V
G 1
Gateway ECU
CA1H
CA1L
A 6
Ambient Temp. Sensor
EB1
B11
Battery ECU
CANL
CANH
P 8
Power Steering ECU
H14
Hybrid Vehicle Control ECU
TAM
E2
E 4(A), E 6(C), E 7(D)
Engine Control Module
ID4
J15
Junction Connector
J18
Junction Connector
J17
Junction Connector
J16
Junction Connector
J24
Junction Connector
J25
Junction Connector
IA3
4I
4C
S 7(A), S 8(B), S 9(C), S10(D)
Skid Control ECU
SP1
FL+
FL–
FR+
FR–
RL+
RL–
RR+
RR–
ABS Speed Sensors
IH
(*2)
* 1 : w/ Navigation System
* 2 : Shielded

Multi–Display and Audio System for Separate Amplifier

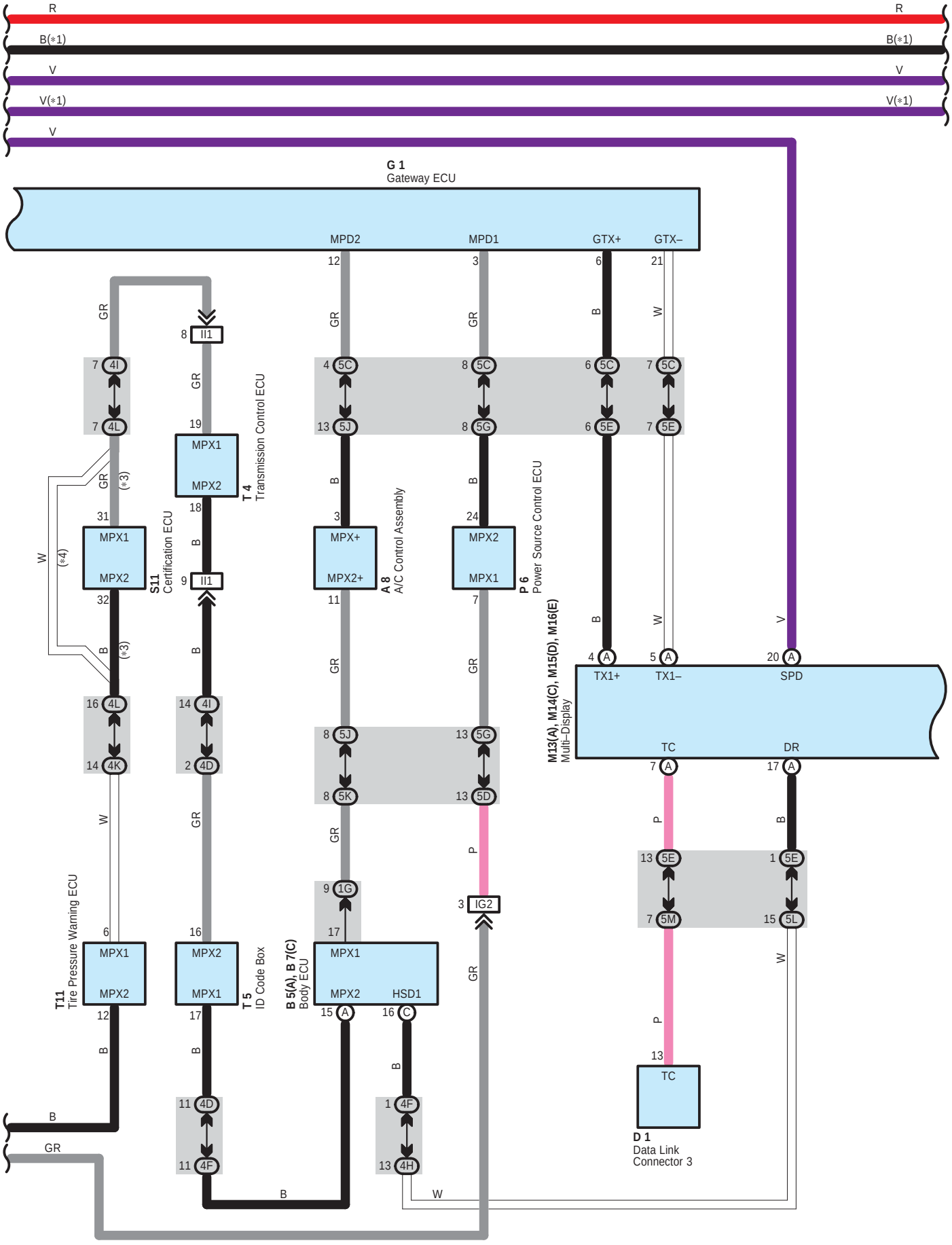

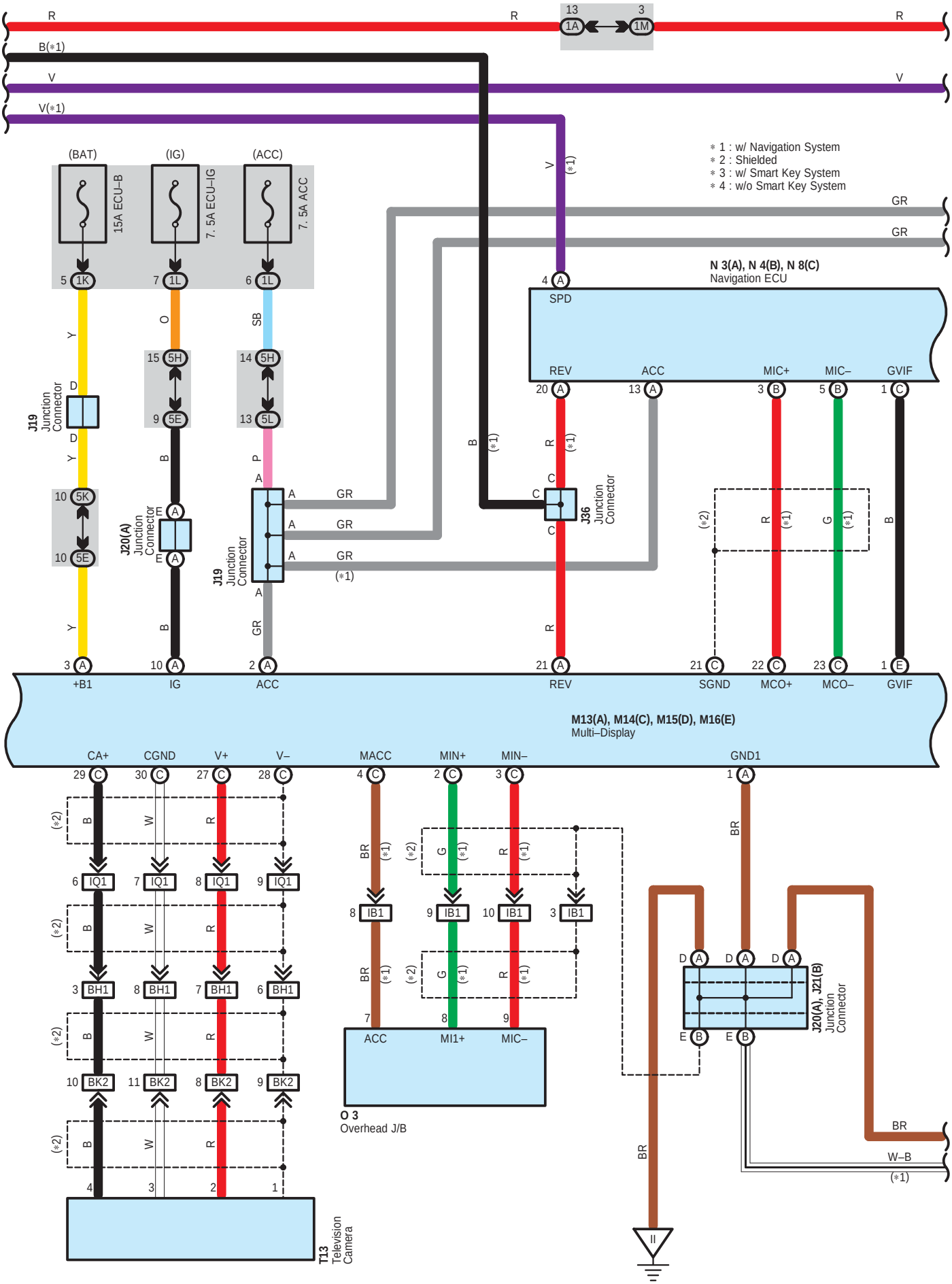
R
B(*1)
V
V(*1)
13
1A
3
1M
(BAT)
(IG)
(ACC)
15A ECU–B
7. 5A ECU–IG
7. 5A ACC
5 1K
7 1L
6 1L
Y
O
SB
15 5H
9 5E
14 5H
13 5L
B
P
J19 Junction Connector
D
10 5K
10 5E
J20(A) Junction Connector
E A
A GR
(*1)
3 A
10 A
2 A
+B1
IG
ACC
* 1 : w/ Navigation System
* 2 : Shielded
* 3 : w/ Smart Key System
* 4 : w/o Smart Key System
N 3(A), N 4(B), N 8(C)
Navigation ECU
4 A
SPD
REV
ACC
MIC+
MIC–
GVIF
20 A
13 A
3 B
5 B
1 C
R
G
J36 Junction Connector
21 A
21 C
22 C
23 C
1 E
SGND
MCO+
MCO–
GVIF
M13(A), M14(C), M15(D), M16(E)
Multi–Display
CA+
CGND
V+
V–
MACC
MIN+
MIN–
GND1
29 C
30 C
27 C
28 C
4 C
2 C
3 C
1 A
W
6 IQ1
7 IQ1
8 IQ1
9 IQ1
3 BH1
8 BH1
7 BH1
6 BH1
10 BK2
11 BK2
8 BK2
9 BK2
4
3
2
1
8 IB1
9 IB1
10 IB1
3 IB1
7
8
9
ACC
MI1+
MIC–
O 3
Overhead J/B
D A
E B
J20(A), J321(B) Junction Connector
W–B
T13 Television Camera

Multi–Display and Audio System for Separate Amplifier

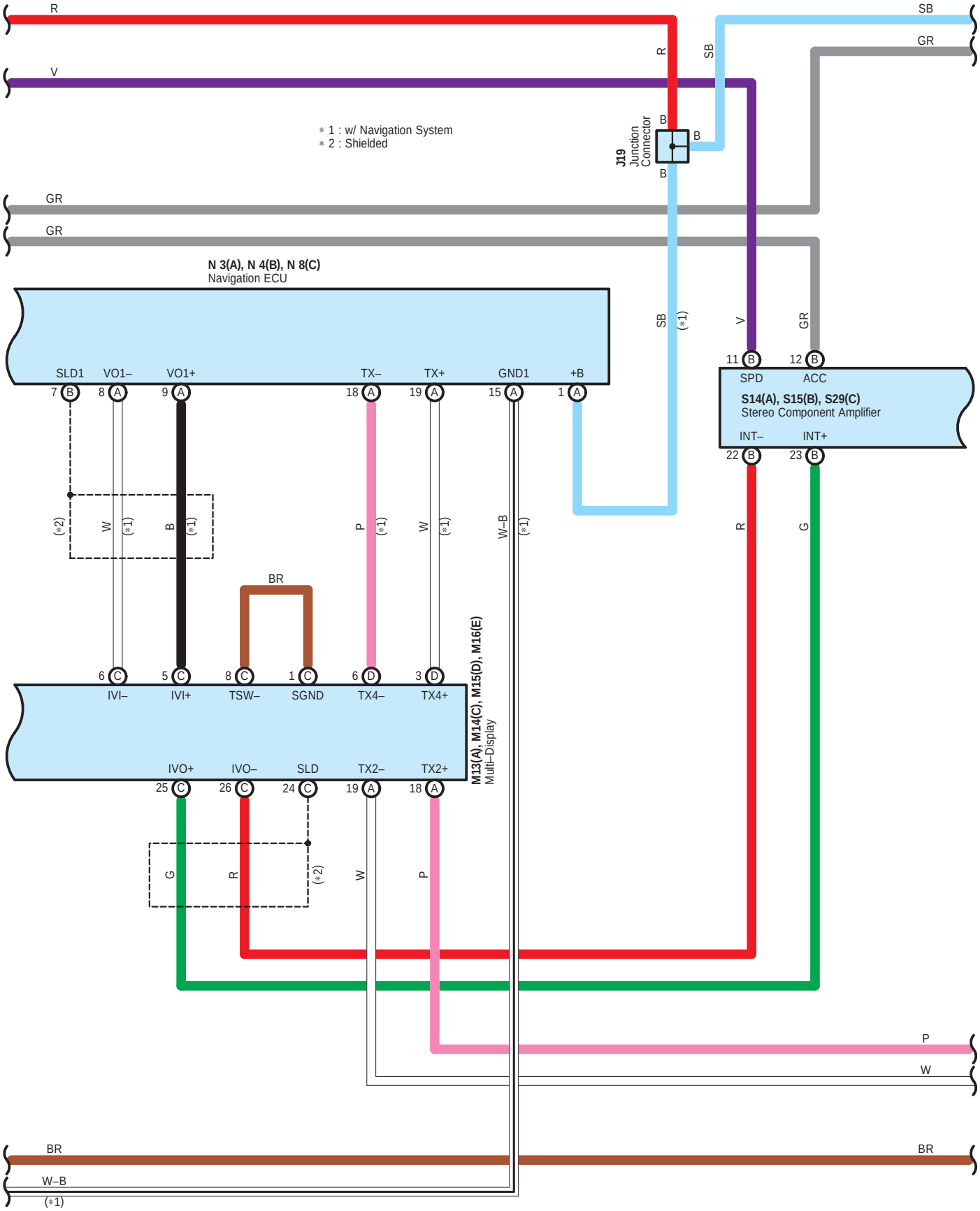

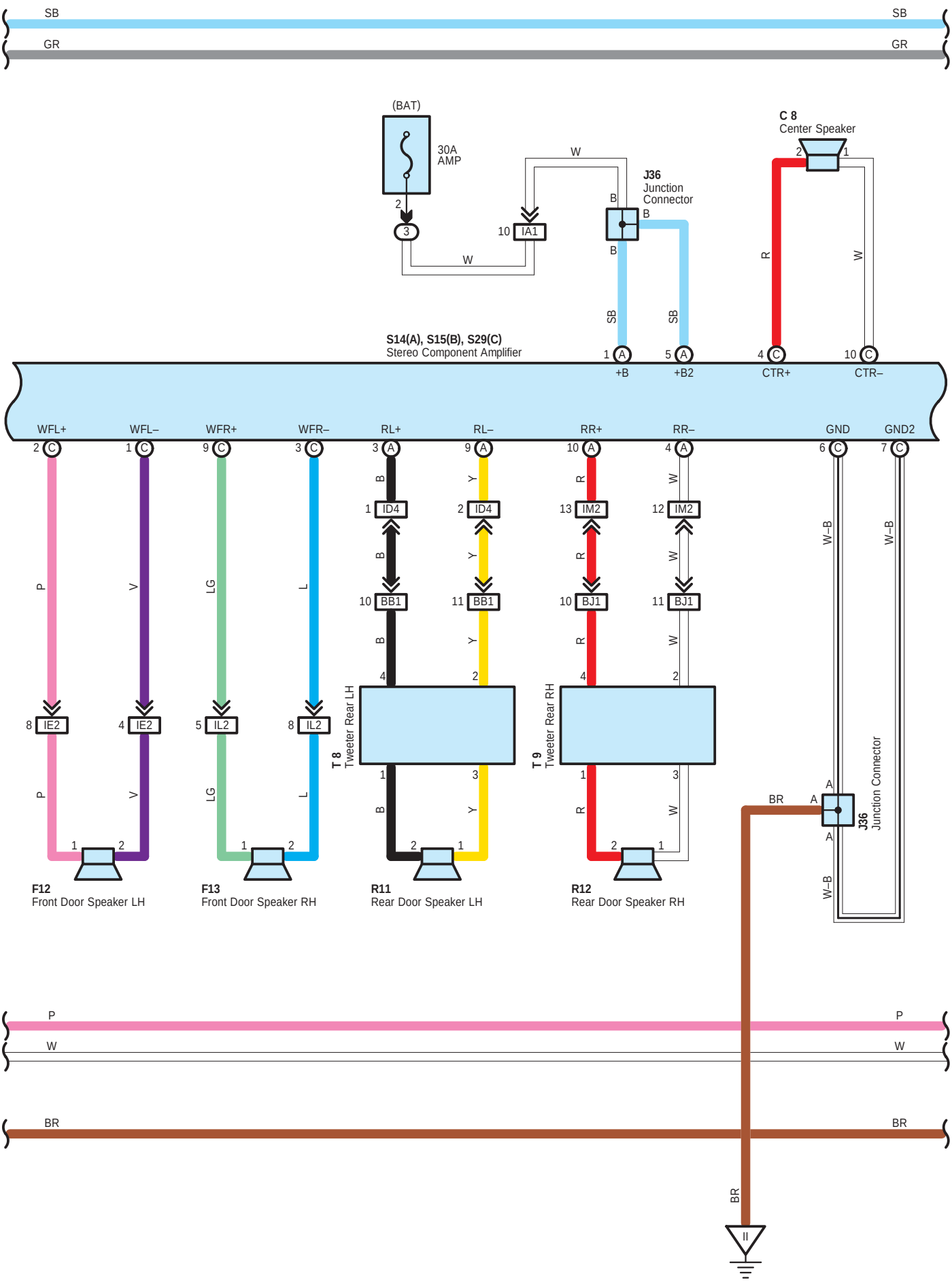
SB
GR
(BAT)
30A
AMP
W
J36
Junction
Connector
C 8
Center Speaker
S14(A), S15(B), S29(C)
Stereo Component Amplifier
+B
+B2
CTR+
CTR–
WFL+
WFL–
WFR+
WFR–
RL+
RL–
RR+
RR–
GND
GND2
IE2
IL2
ID4
IM2
BB1
BJ1
T 8
Tweeter Rear LH
T 9
Tweeter Rear RH
F12
Front Door Speaker LH
F13
Front Door Speaker RH
R11
Rear Door Speaker LH
R12
Rear Door Speaker RH
W–B
BR
P
V
LG
L
Y
R

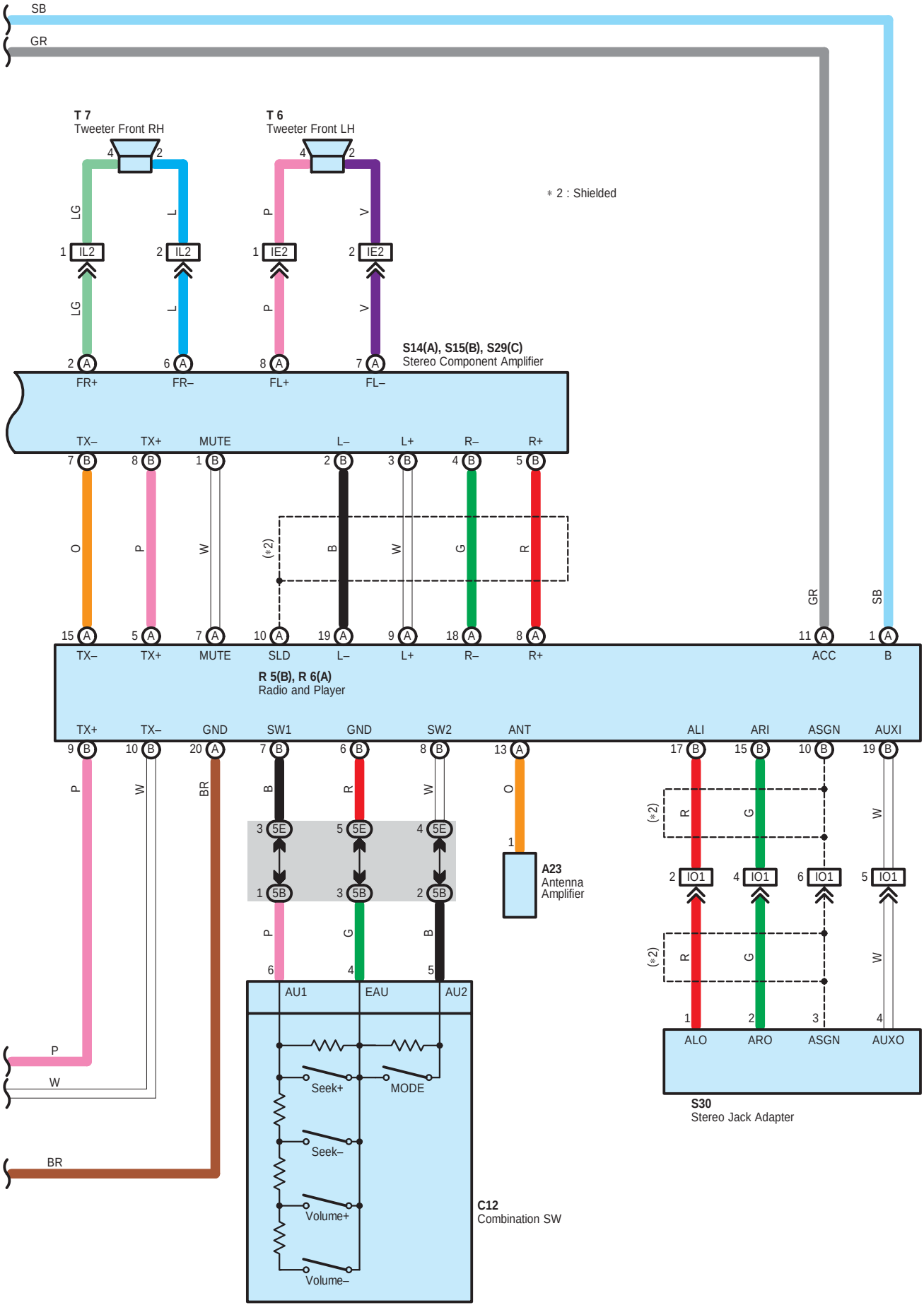
SB
GR
T 7
Tweeter Front RH
T 6
Tweeter Front LH
∗ 2 : Shielded
IL2
IE2
S14(A), S15(B), S29(C)
Stereo Component Amplifier
FR+
FR–
FL+
FL–
TX–
TX+
MUTE
L–
L+
R–
R+
R 5(B), R 6(A)
Radio and Player
SLD
ACC
B
GND
SW1
SW2
ANT
ALI
ARI
ASGN
AUXI
A23
Antenna
Amplifier
5E
5B
IO1
AU1
EAU
AU2
Seek+
MODE
Seek–
Volume+
Volume–
C12
Combination SW
ALO
ARO
AUXO
S30
Stereo Jack Adapter

○ : Parts Location

Code	See Page	Code	See Page	Code	See Page
A6	46	J16	50	R11	54
A8	48	J17	50	R12	54
A23	48	J18	50	S7 A	51
B5 A	48	J19	50	S8 B	51
B7 C	48	J20 A	50	S9 C	51
B11	52	J21 B	50	S10 D	51
C8	49	J24	50	S11	51
C10	49	J25	50	S14 A	51
C12	49	J36	50	S15 B	51
D1	49	M13 A	50	S29 C	51
E4 A	49	M14 C	50	S30	51
E6 C	49	M15 D	50	T4	51
E7 D	49	M16 E	50	T5	51
F12	53	N3 A	50	T6	55
F13	53	N4 B	50	T7	55
F14	53	N8 C	50	T8	55
G1	49	O3	54	T9	55
H14	49	P6	51	T11	51
J6	50	P8	51	T13	55
J10	50	R5 B	51		
J15	50	R6 A	51		

▭ : Relay Blocks

Code	See Page	Relay Blocks (Relay Block Location)
3	22	Engine Room R/B (Engine Compartment Left)

: **Junction Block and Wire Harness Connector**

Code	See Page	Junction Block and Wire Harness (Connector Location)
1A	30	Engine Room Main Wire and Driver Side J/B (Lower Finish Panel)
1F	30	Instrument Panel Wire and Driver Side J/B (Lower Finish Panel)
1G		
1K	31	
1L		
1M		
3H	24	Engine Room Main Wire and Engine Room J/B (Engine Compartment Left)
4C	38	Instrument Panel Wire and Center Connector No.1 (Behind the Combination Meter)
4D		
4F		
4H		
4I		
4K		
4L		
5B	42	Instrument Panel Wire and Center Connector No.2 (Instrument Panel Brace RH)
5C		
5D		
5E		
5G		
5H		
5I		
5J		
5K		
5L		
5M		
5N		

: **Connector Joining Wire Harness and Wire Harness**

Code	See Page	Joining Wire Harness and Wire Harness (Connector Location)
EB1	56	Engine Wire and Engine Room Main Wire (Inside of the Engine Room R/B)
IA1	58	Engine Room Main Wire and Instrument Panel Wire (Upper Parts of Front Body Pillar LH)
IA3		
IB1	58	Roof Wire and Instrument Panel Wire (Upper Parts of Front Body Pillar LH)
ID4	58	Instrument Panel Wire and Floor Wire (Left Kick Panel)
IE2	58	Front Door LH Wire and Instrument Panel Wire (Left Kick Panel)
IG1	59	Instrument Panel Wire and Instrument Panel No.2 Wire (Behind the Combination Meter)
IG2		
II1	59	Engine Wire and Instrument Panel Wire (Behind the Glove Box)
IJ3	59	Engine Room Main Wire and Instrument Panel Wire (Behind the Glove Box)
IL2	59	Front Door RH Wire and Instrument Panel Wire (Right Kick Panel)
IM1	59	Instrument Panel Wire and Floor No.2 Wire (Right Kick Panel)
IM2		
IO1	59	Instrument Panel Wire and Instrument Panel No.4 Wire (Front Console Box LH)
IQ1	59	Floor
BB1	60	Rear Door No.2 Wire and Floor Wire (Left Center Pillar)
BH1	61	Back Door No.1 Wire and Floor Wire (Rear Side of Roof Panel)
BJ1	61	Rear Door No.1 Wire and Floor No.2 Wire (Right Center Pillar)
BK2	61	Back Door No.1 Wire and Back Door No.2 Wire (Rear Side of Roof Panel)

▽ : **Ground Points**

Code	See Page	Ground Points Location
IH	58	Cowl Side Panel LH
II	58	Instrument Panel Brace LH

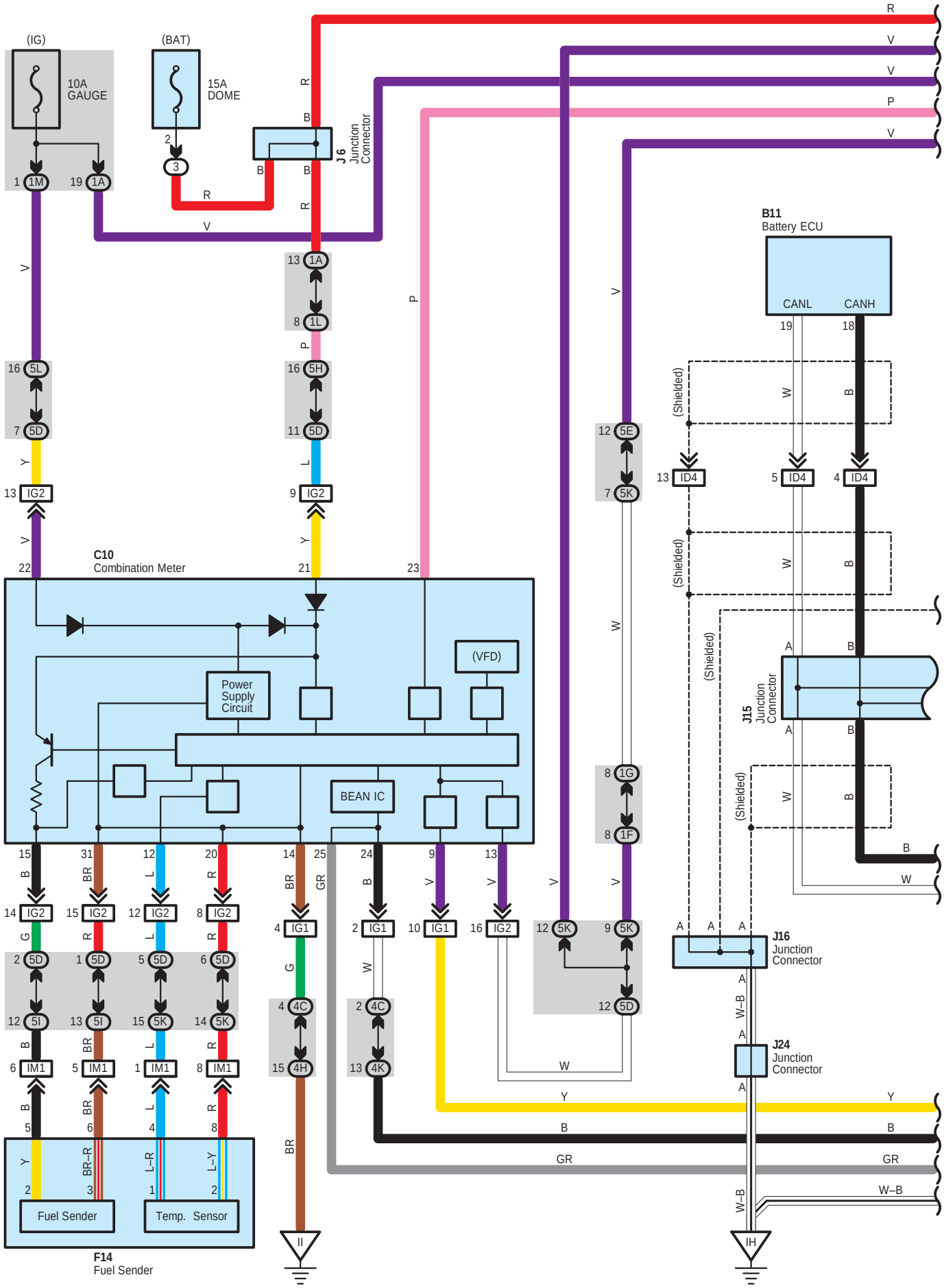
(IG)
(BAT)
10A GAUGE
15A DOME
J6 Junction Connector
B11 Battery ECU
CANL
CANH
C10 Combination Meter
Power Supply Circuit
(VFD)
BEAN IC
(Shielded)
J15 Junction Connector
J16 Junction Connector
J24 Junction Connector
F14 Fuel Sender
Fuel Sender
Temp. Sensor

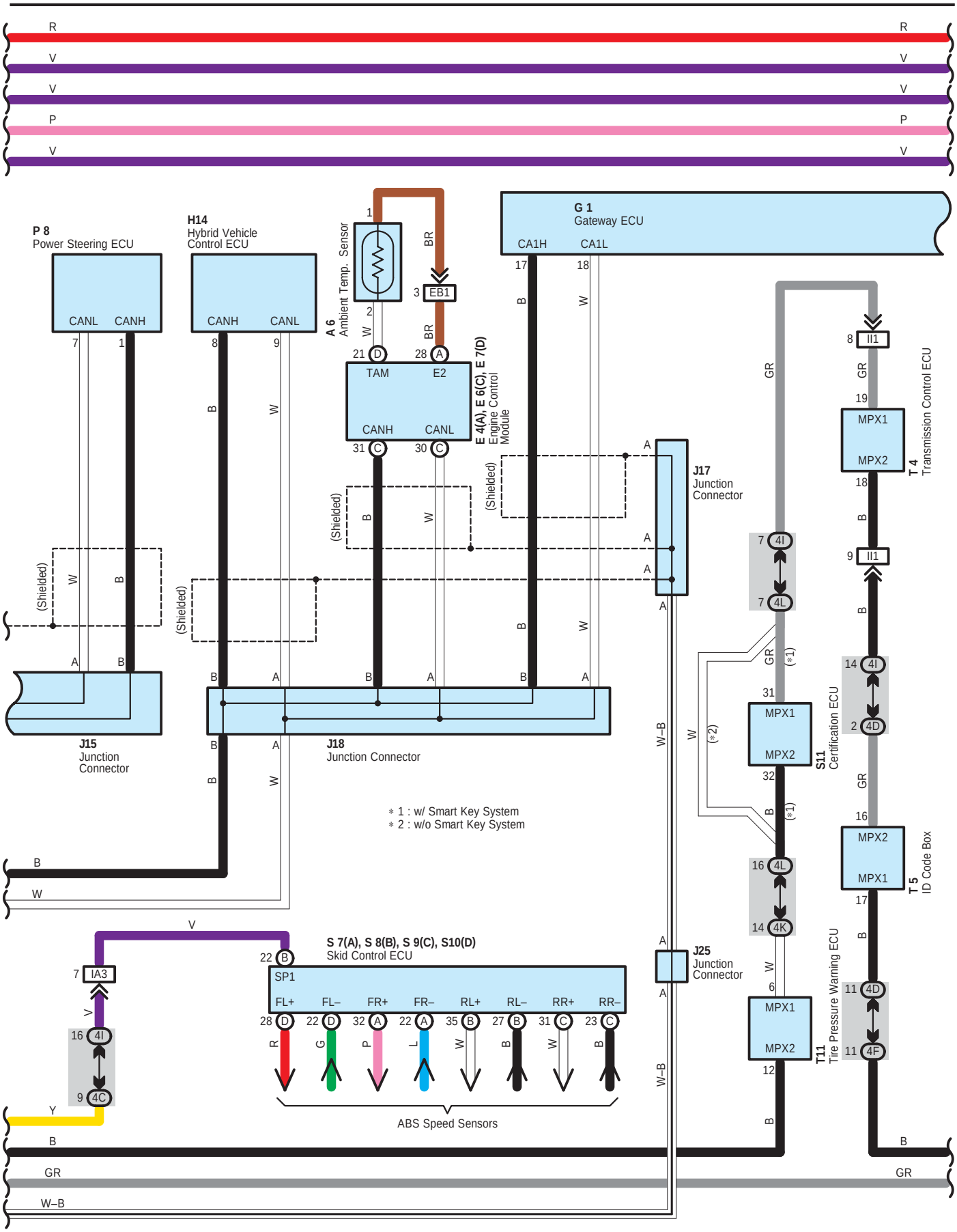
R
V
V
P
V
P 8
Power Steering ECU
CANL
CANH
H14
Hybrid Vehicle
Control ECU
CANH
CANL
A 6
Ambient Temp. Sensor
EB1
TAM
E2
CANH
CANL
E 4(A), E 6(C), E 7(D)
Engine Control
Module
G 1
Gateway ECU
CA1H
CA1L
J17
Junction
Connector
J15
Junction
Connector
J18
Junction Connector
(Shielded)
W–B
GR
MPX1
MPX2
T 4
Transmission Control ECU
S11
Certification ECU
T 5
ID Code Box
T11
Tire Pressure Warning ECU
J25
Junction
Connector
S 7(A), S 8(B), S 9(C), S10(D)
Skid Control ECU
SP1
FL+
FL–
FR+
FR–
RL+
RL–
RR+
RR–
ABS Speed Sensors
∗ 1 : w/ Smart Key System
∗ 2 : w/o Smart Key System

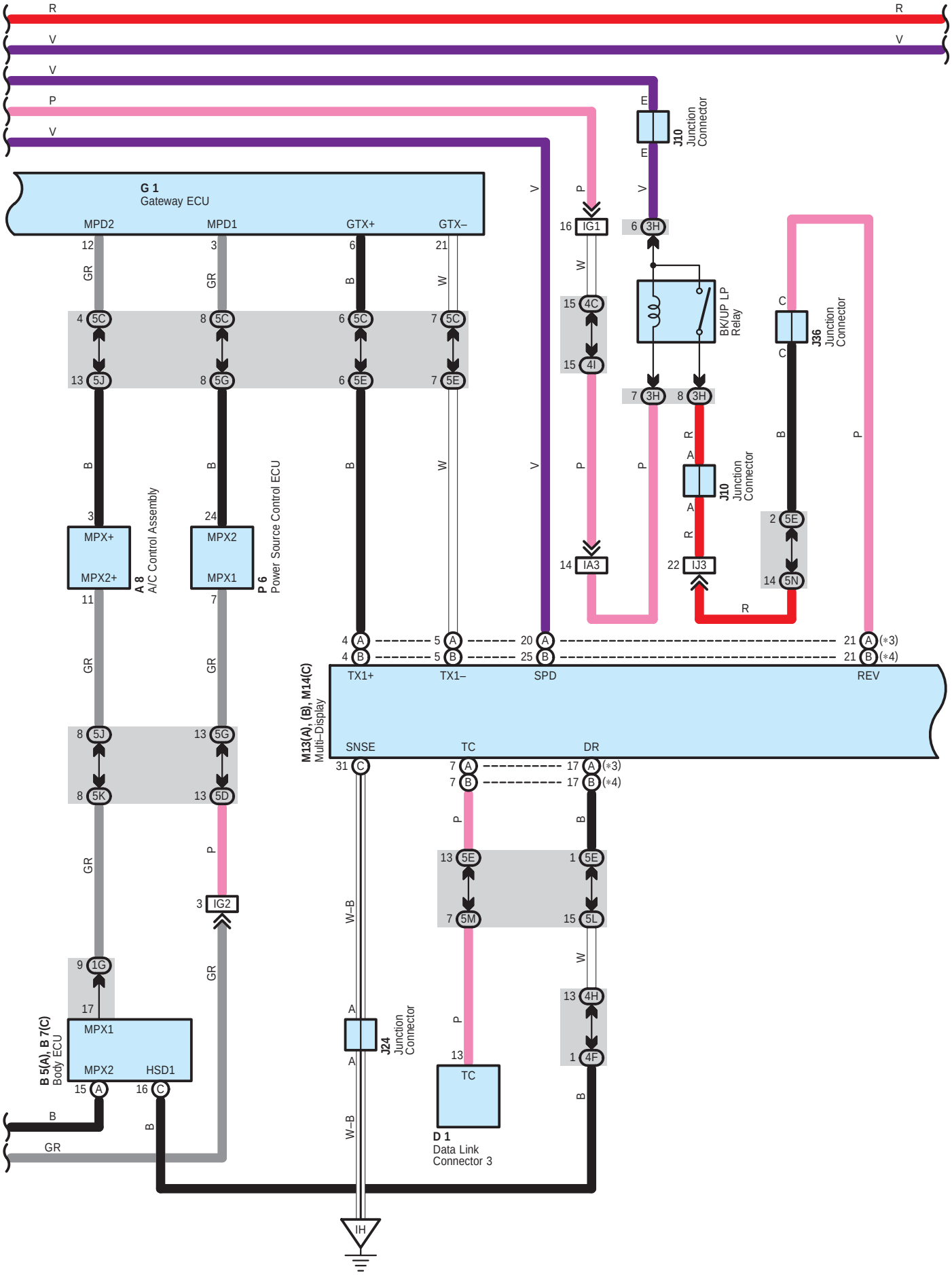
R
V
P
G 1
Gateway ECU
MPD2
MPD1
GTX+
GTX–
IG1
IA3
IG2
IJ3
J10 Junction Connector
BK/UP LP Relay
J36 Junction Connector
A 8 A/C Control Assembly
P 6 Power Source Control ECU
MPX+
MPX2+
MPX2
MPX1
M13(A), (B), M14(C) Multi–Display
TX1+
TX1–
SPD
REV
SNSE
TC
DR
B 5(A), B 7(C) Body ECU
HSD1
J24 Junction Connector
D 1 Data Link Connector 3
IH

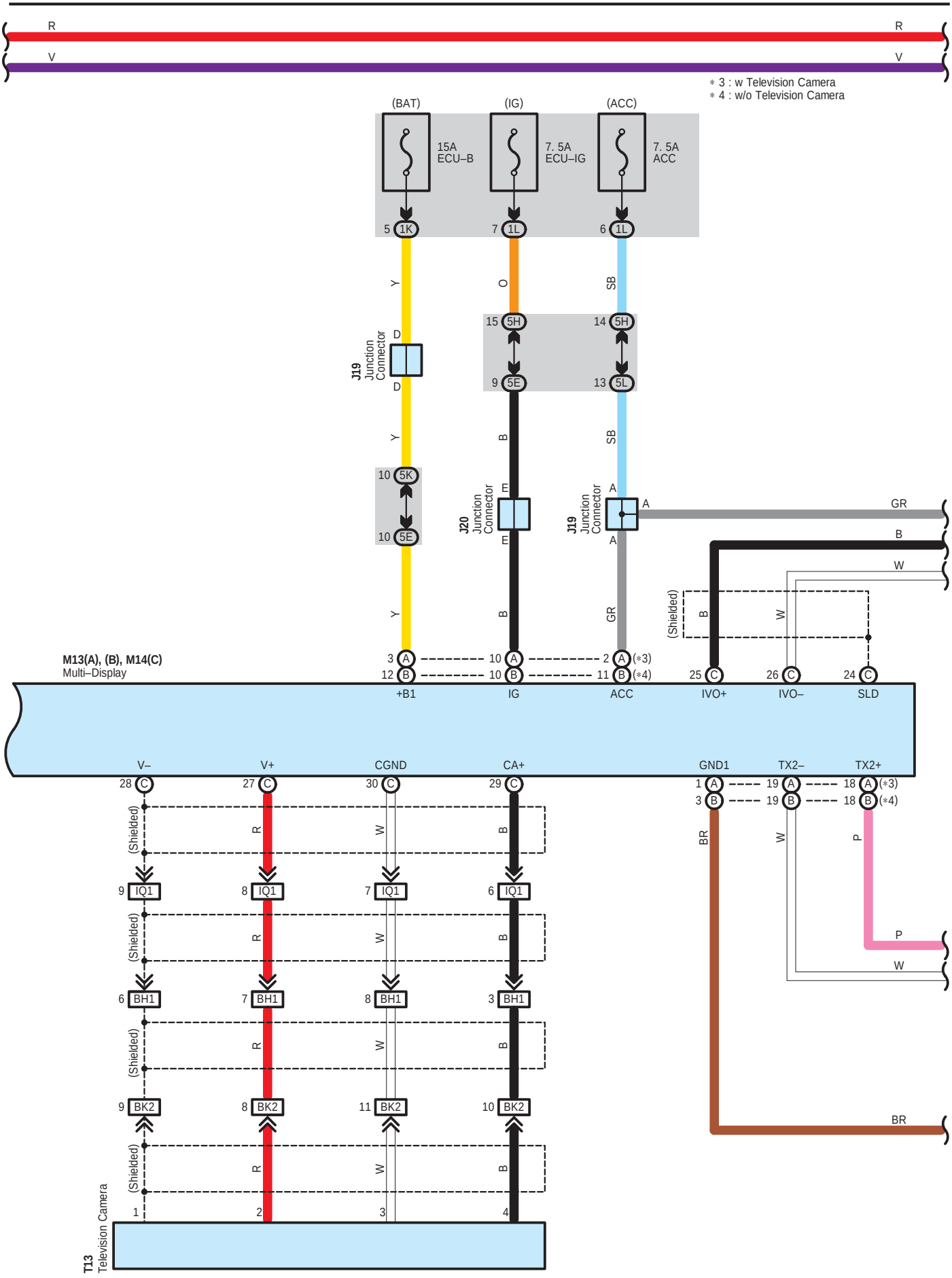
R
V
R
V
* 3 : w Television Camera
* 4 : w/o Television Camera
(BAT)
(IG)
(ACC)
15A
ECU–B
7. 5A
ECU–IG
7. 5A
ACC
5 1K
7 1L
6 1L
Y
O
SB
J19
Junction
Connector
D
D
15 5H
9 5E
14 5H
13 5L
Y
B
SB
10 5K
10 5E
J20
Junction
Connector
E
E
J19
Junction
Connector
A
A
A
GR
B
W
Y
B
GR
(Shielded)
B
W
M13(A), (B), M14(C)
Multi–Display
3 A
12 B
10 A
10 B
2 A (*3)
11 B (*4)
25 C
26 C
24 C
+B1
IG
ACC
IVO+
IVO–
SLD
V–
V+
CGND
CA+
GND1
TX2–
TX2+
28 C
27 C
30 C
29 C
1 A
3 B
19 A
19 B
18 A (*3)
18 B (*4)
(Shielded)
R
W
B
BR
W
P
9 IQ1
8 IQ1
7 IQ1
6 IQ1
(Shielded)
R
W
B
P
W
6 BH1
7 BH1
8 BH1
3 BH1
(Shielded)
R
W
B
9 BK2
8 BK2
11 BK2
10 BK2
(Shielded)
R
W
B
BR
1
2
3
4
T13
Television Camera

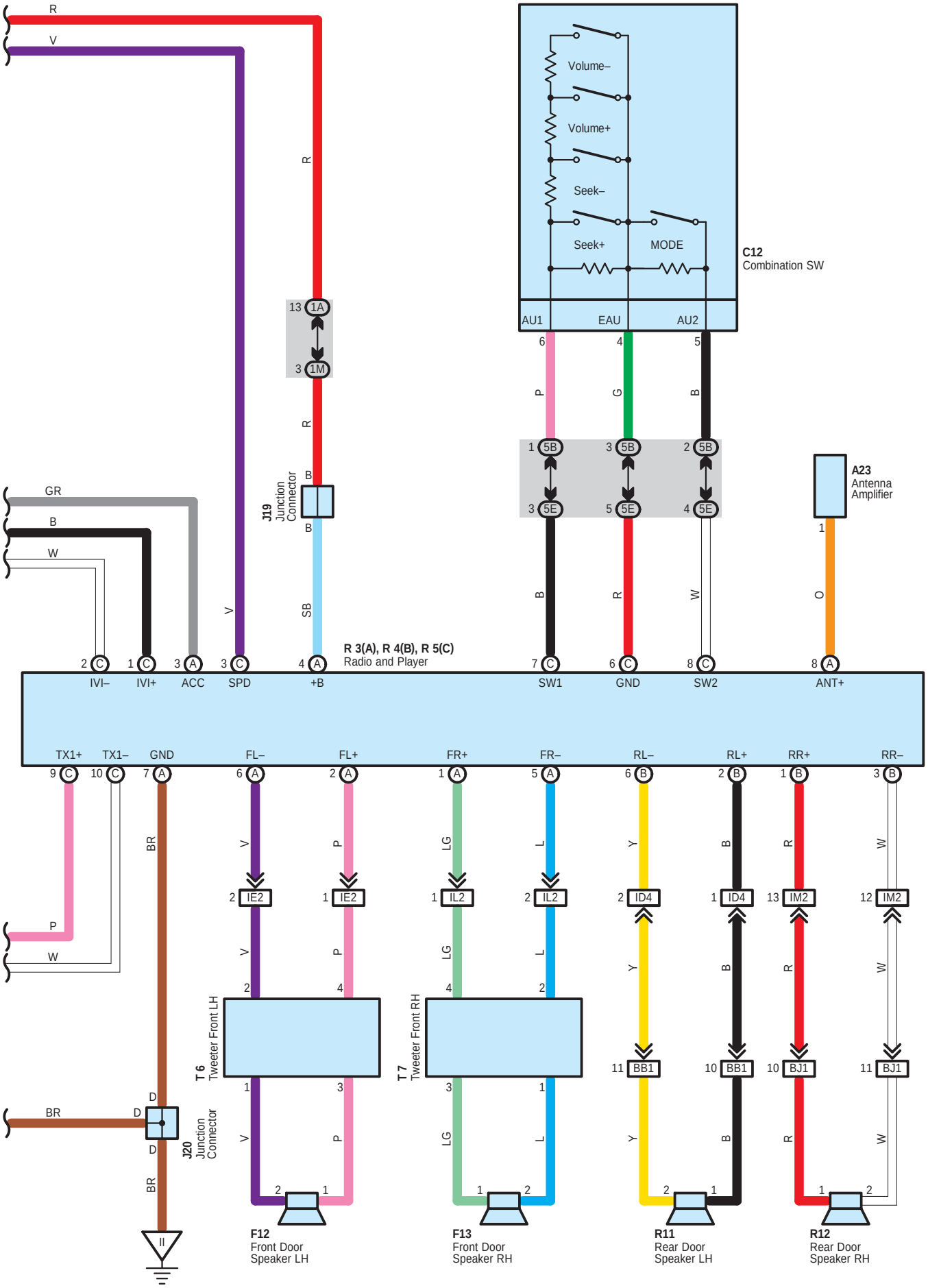
R
V
GR
B
W
P
W
BR
BR
Volume–
Volume+
Seek–
Seek+
MODE
C12
Combination SW
AU1
EAU
AU2
J19
Junction
Connector
SB
A23
Antenna
Amplifier
O
R 3(A), R 4(B), R 5(C)
Radio and Player
IVI–
IVI+
ACC
SPD
+B
SW1
GND
SW2
ANT+
TX1+
TX1–
GND
FL–
FL+
FR+
FR–
RL–
RL+
RR+
RR–
T 6
Tweeter Front LH
T 7
Tweeter Front RH
J20
Junction
Connector
F12
Front Door
Speaker LH
F13
Front Door
Speaker RH
R11
Rear Door
Speaker LH
R12
Rear Door
Speaker RH

: Parts Location

Code	See Page	Code	See Page	Code	See Page
A6	46	J6	50	R4 B	51
A8	48	J10	50	R5 C	51
A23	48	J15	50	R11	54
B5 A	48	J16	50	R12	54
B7 C	48	J17	50	S7 A	51
B11	52	J18	50	S8 B	51
C10	49	J19	50	S9 C	51
C12	49	J20	50	S10 D	51
D1	49	J24	50	S11	51
E4 A	49	J25	50	T4	51
E6 C	49	J36	50	T5	51
E7 D	49	M13 A	50	T6	55
F12	53	M13 B	50	T7	55
F13	53	M14 C	50	T11	51
F14	53	P6	51	T13	55
G1	49	P8	51		
H14	49	R3 A	51		

: Relay Blocks

Code	See Page	Relay Blocks (Relay Block Location)
3	22	Engine Room R/B (Engine Compartment Left)

: Junction Block and Wire Harness Connector

Code	See Page	Junction Block and Wire Harness (Connector Location)
1A	30	Engine Room Main Wire and Driver Side J/B (Lower Finish Panel)
1F	30	Instrument Panel Wire and Driver Side J/B (Lower Finish Panel)
1G		
1K	31	
1L		
1M		
3H	24	Engine Room Main Wire and Engine Room J/B (Engine Compartment Left)
4C	38	Instrument Panel Wire and Center Connector No.1 (Behind the Combination Meter)
4D		
4F		
4H		
4I		
4K		
4L		
5B	42	Instrument Panel Wire and Center Connector No.2 (Instrument Panel Brace RH)
5C		
5D		
5E		
5G		
5H		
5I		
5J		
5K		
5L		
5M		
5N		

: Connector Joining Wire Harness and Wire Harness

Code	See Page	Joining Wire Harness and Wire Harness (Connector Location)
EB1	56	Engine Wire and Engine Room Main Wire (Inside of the Engine Room R/B)
IA3	58	Engine Room Main Wire and Instrument Panel Wire (Upper Parts of Front Body Pillar LH)
ID4	58	Instrument Panel Wire and Floor Wire (Left Kick Panel)
IE2	58	Front Door LH Wire and Instrument Panel Wire (Left Kick Panel)
IG1	59	Instrument Panel Wire and Instrument Panel No.2 Wire (Behind the Combination Meter)
IG2		
II1	59	Engine Wire and Instrument Panel Wire (Behind the Glove Box)
IJ3	59	Engine Room Main Wire and Instrument Panel Wire (Behind the Glove Box)
IL2	59	Front Door RH Wire and Instrument Panel Wire (Right Kick Panel)
IM1	59	Instrument Panel Wire and Floor No.2 Wire (Right Kick Panel)
IM2		
IQ1	59	Floor
BB1	60	Rear Door No.2 Wire and Floor Wire (Left Center Pillar)
BH1	61	Back Door No.1 Wire and Floor Wire (Rear Side of Roof Panel)
BJ1	61	Rear Door No.1 Wire and Floor No.2 Wire (Right Center Pillar)
BK2	61	Back Door No.1 Wire and Back Door No.2 Wire (Rear Side of Roof Panel)

: Ground Points

Code	See Page	Ground Points Location
IH	58	Cowl Side Panel LH
II	58	Instrument Panel Brace LH

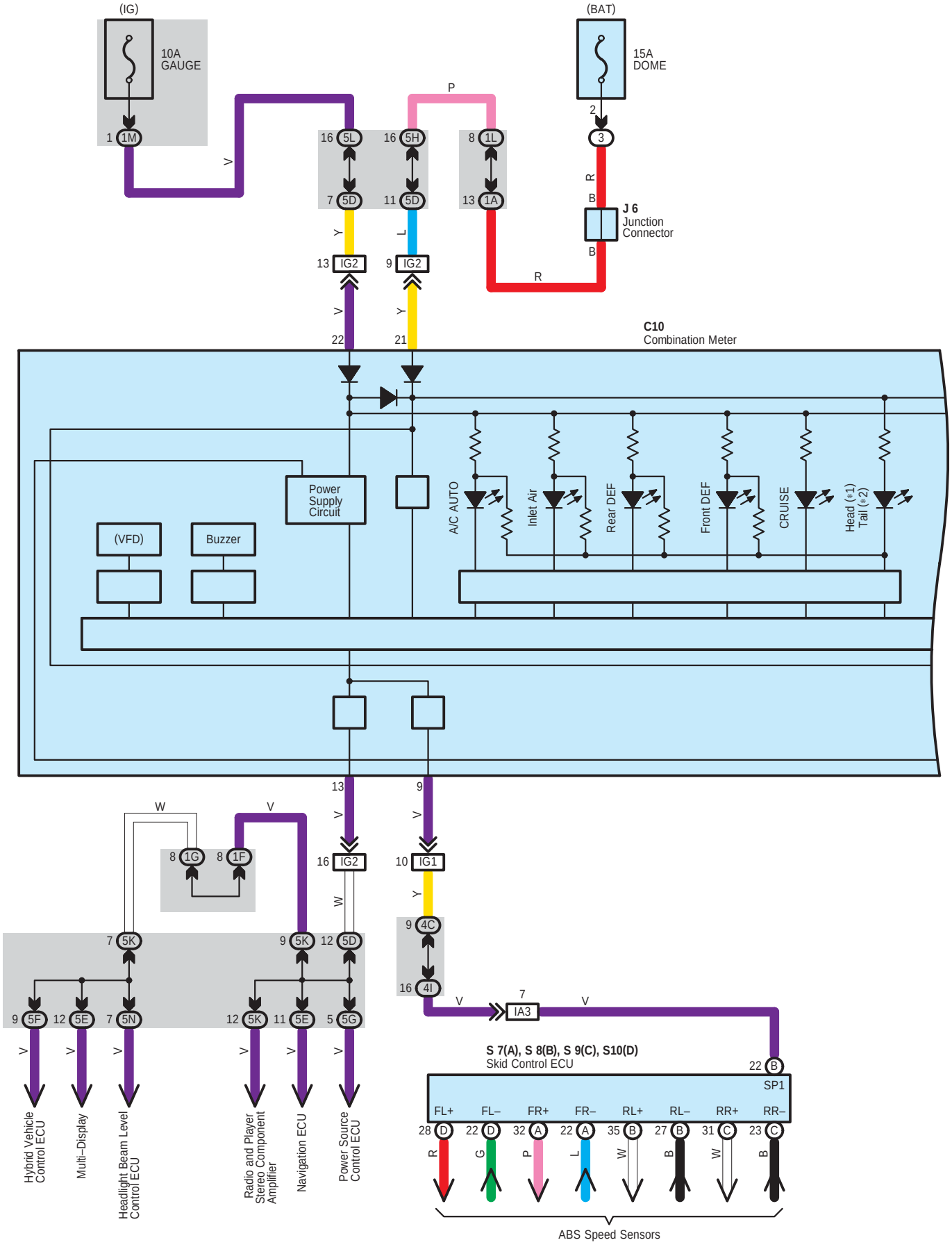
(IG)
10A
GAUGE
1 1M
V
16 5L
7 5D
Y
13 IG2
V
22
16 5H
11 5D
L
9 IG2
Y
21
P
8 1L
13 1A
R
(BAT)
15A
DOME
2
3
R
B
J 6
Junction
Connector
B
R
C10
Combination Meter
Power
Supply
Circuit
(VFD)
Buzzer
A/C AUTO
Inlet Air
Rear DEF
Front DEF
CRUISE
Head (*1)
Tail (*2)
13
V
16 IG2
W
9
V
10 IG1
Y
9 4C
16 4I
V
7
IA3
V
W
V
8 1G
8 1F
7 5K
9 5K
12 5D
9 5F
12 5E
7 5N
12 5K
11 5E
5 5G
Hybrid Vehicle
Control ECU
Multi–Display
Headlight Beam Level
Control ECU
Radio and Player
Stereo Component
Amplifier
Navigation ECU
Power Source
Control ECU
S 7(A), S 8(B), S 9(C), S10(D)
Skid Control ECU
22 B
SP1
FL+
FL–
FR+
FR–
RL+
RL–
RR+
RR–
28 D
22 D
32 A
22 A
35 B
27 B
31 C
23 C
R
G
P
L
W
B
W
B
ABS Speed Sensors

* 1 : USA
* 2 : Canada

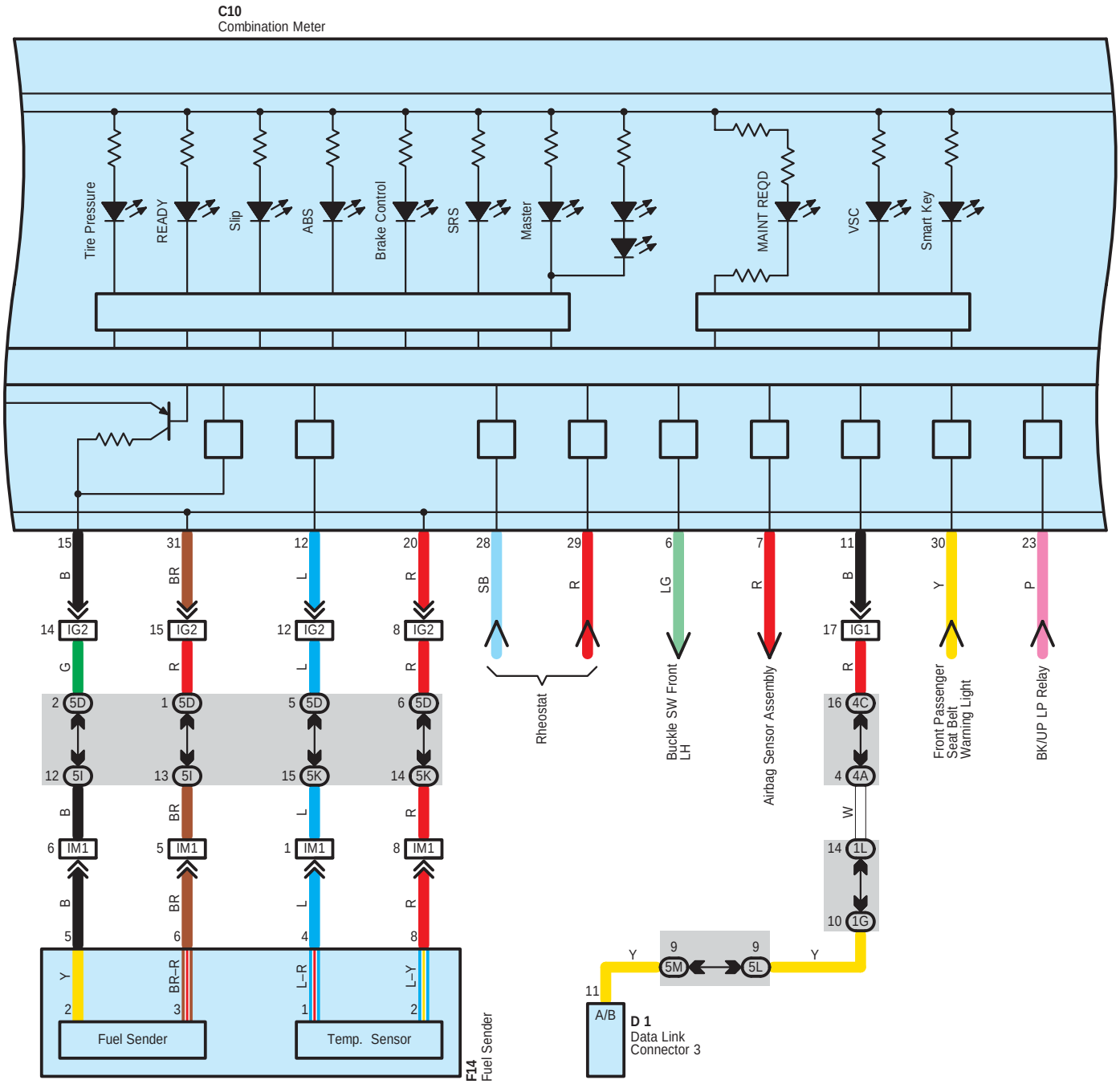

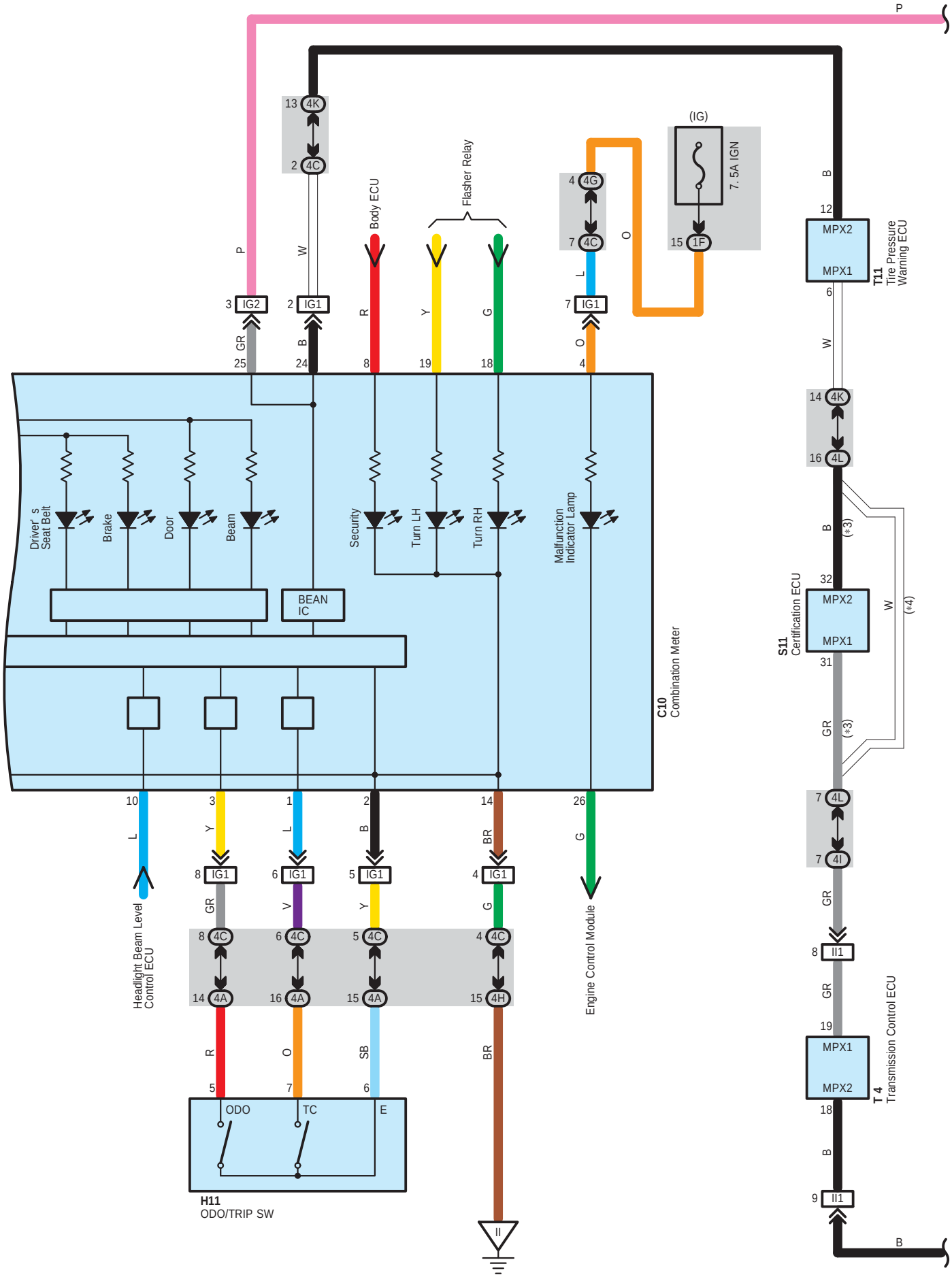
P
13 4K
2 4C
(IG)
7. 5A IGN
15 1F
4 4G
7 4C
Body ECU
Flasher Relay
B
12 MPX2 MPX1
T11 Tire Pressure Warning ECU
6
W
14 4K
16 4L
B
(*3)
32 MPX2 MPX1
S11 Certification ECU
31
W
(*4)
GR
(*3)
7 4L
7 4I
GR
8 II1
GR
19 MPX1 MPX2
T 4 Transmission Control ECU
18
B
9 II1
B
3 IG2
2 IG1
P
W
R
Y
G
L
O
GR
B
25
24
8
19
18
4
Driver' s Seat Belt
Brake
Door
Beam
Security
Turn LH
Turn RH
Malfunction Indicator Lamp
BEAN IC
C10 Combination Meter
10
3
1
2
14
26
L
Y
L
B
BR
G
8 IG1
6 IG1
5 IG1
4 IG1
GR
V
Y
G
8 4C
6 4C
5 4C
4 4C
14 4A
16 4A
15 4A
15 4H
Headlight Beam Level Control ECU
Engine Control Module
R
O
SB
BR
5
7
6
ODO
TC
E
H11
ODO/TRIP SW

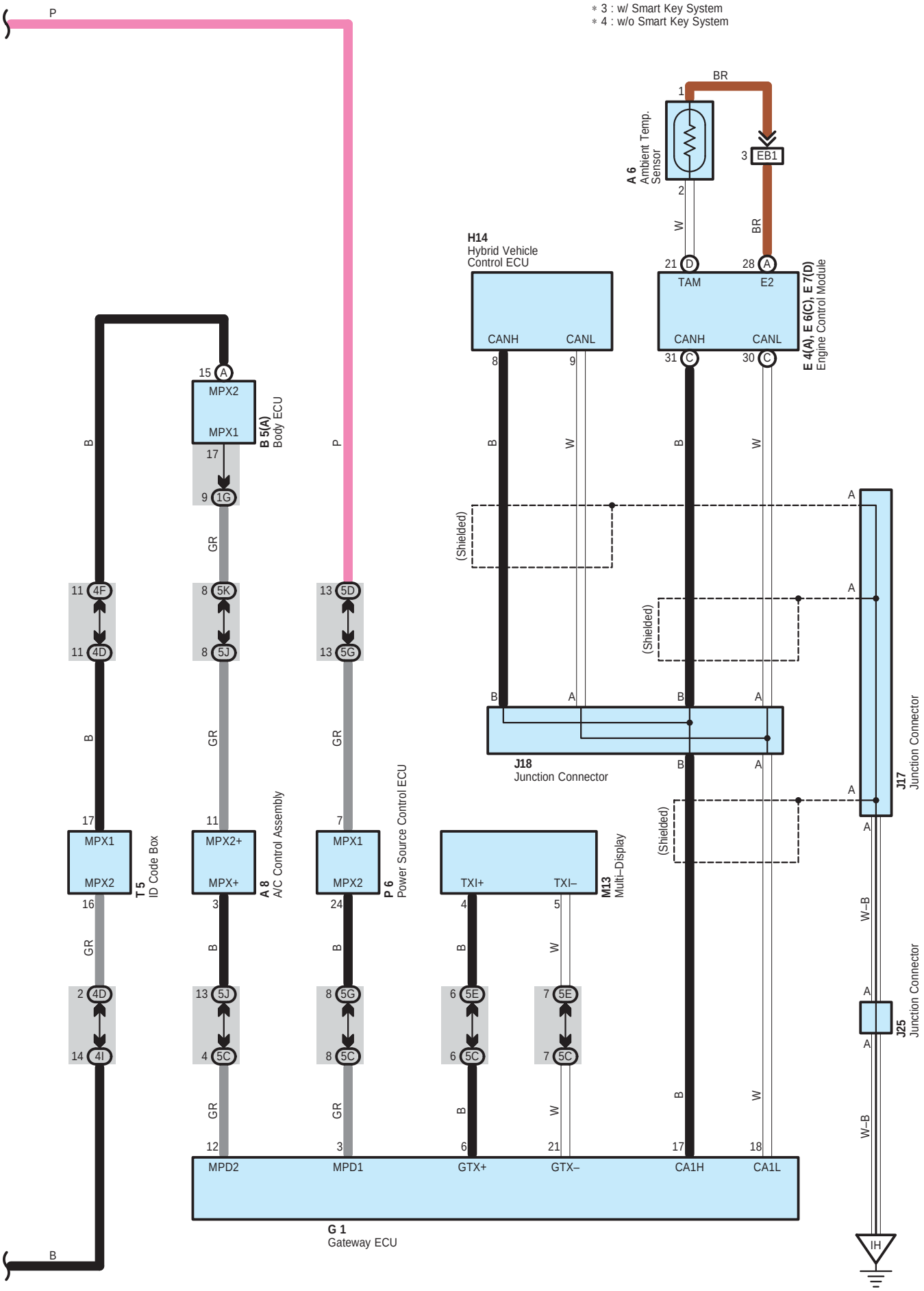
* 3 : w/ Smart Key System
* 4 : w/o Smart Key System
A 6
Ambient Temp. Sensor
BR
W
EB1
H14
Hybrid Vehicle Control ECU
CANH
CANL
TAM
E2
E 4(A), E 6(C), E 7(D)
Engine Control Module
B 5(A)
Body ECU
MPX2
MPX1
1G
5K
5J
5D
5G
(Shielded)
J18
Junction Connector
J17
Junction Connector
J25
Junction Connector
W–B
T 5
ID Code Box
4F
4D
4I
A 8
A/C Control Assembly
MPX2+
MPX+
5C
5E
P 6
Power Source Control ECU
M13
Multi-Display
TXI+
TXI–
G 1
Gateway ECU
MPD2
MPD1
GTX+
GTX–
CA1H
CA1L
IH

Combination Meter

: Parts Location

Code	See Page	Code	See Page	Code	See Page
A6	46	G1	49	S7 A	51
A8	48	H11	49	S8 B	51
B5 A	48	H14	49	S9 C	51
C10	49	J6	50	S10 D	51
D1	49	J17	50	S11	51
E4 A	49	J18	50	T4	51
E6 C	49	J25	50	T5	51
E7 D	49	M13	50	T11	51
F14	53	P6	51		

: Relay Blocks

Code	See Page	Relay Blocks (Relay Block Location)
3	22	Engine Room R/B (Engine Compartment Left)

: Junction Block and Wire Harness Connector

Code	See Page	Junction Block and Wire Harness (Connector Location)
1A	30	Engine Room Main Wire and Driver Side J/B (Lower Finish Panel)
1F	30	Instrument Panel Wire and Driver Side J/B (Lower Finish Panel)
1G		
1L	31	
1M		
4A	38	Instrument Panel Wire and Center Connector No.1 (Behind the Combination Meter)
4C		
4D		
4F		
4G		
4H		
4I		
4K		
4L		
5C	42	Instrument Panel Wire and Center Connector No.2 (Instrument Panel Brace RH)
5D		
5E		
5F		
5G		
5H		
5I		
5J		
5K		
5L		
5M		
5N		

: Connector Joining Wire Harness and Wire Harness

Code	See Page	Joining Wire Harness and Wire Harness (Connector Location)
EB1	56	Engine Wire and Engine Room Main Wire (Inside of the Engine Room R/B)
IA3	58	Engine Room Main Wire and Instrument Panel Wire (Upper Parts of Front Body Pillar LH)
IG1	59	Instrument Panel Wire and Instrument Panel No.2 Wire (Behind the Combination Meter)
IG2		
II1	59	Engine Wire and Instrument Panel Wire (Behind the Glove Box)
IM1	59	Instrument Panel Wire and Floor No.2 Wire (Right Kick Panel)

▽ : **Ground Points**

Code	See Page	Ground Points Location
IH	58	Cowl Side Panel LH
II	58	Instrument Panel Brace LH

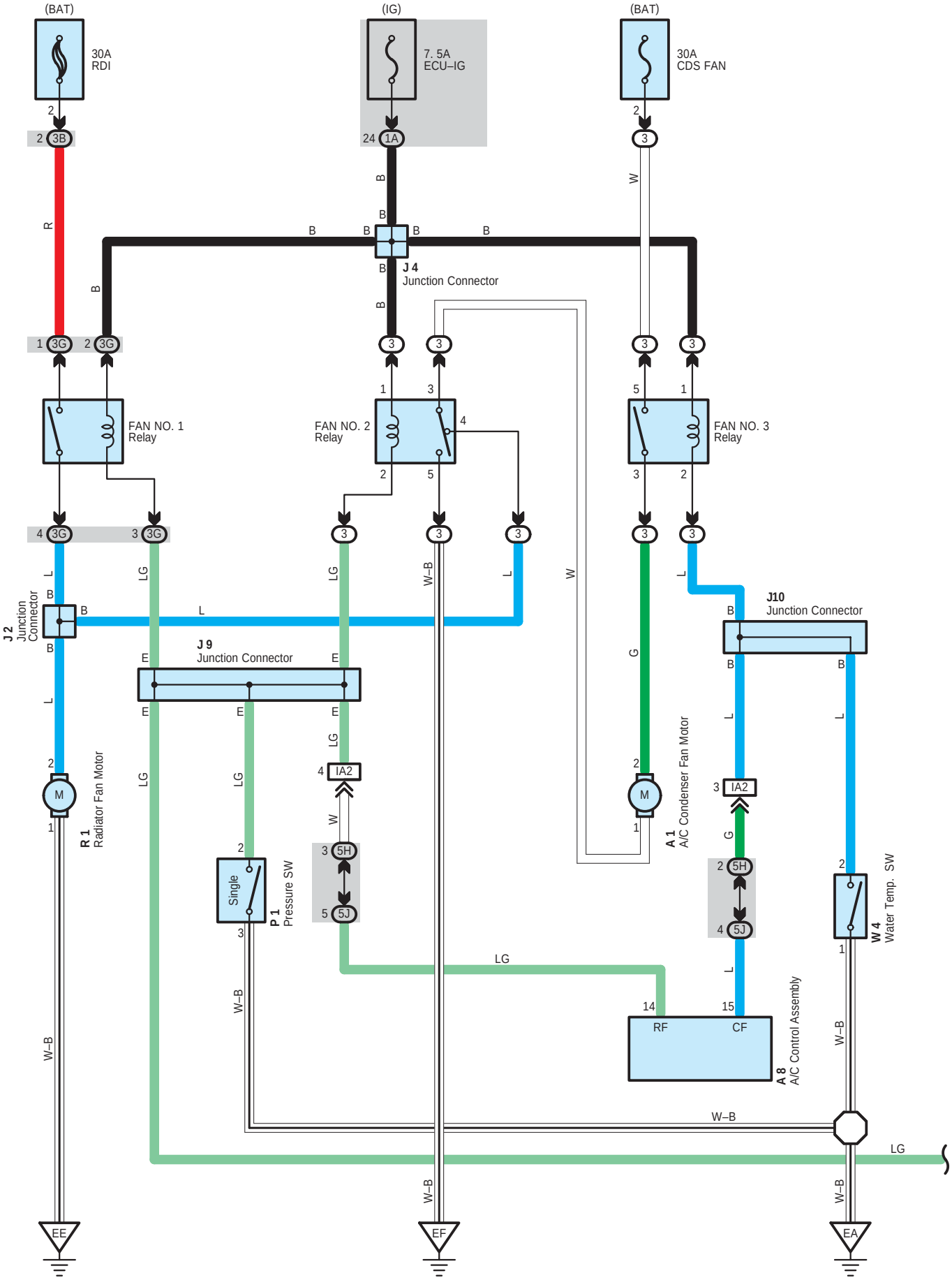
(BAT)
30A
RDI
(IG)
7. 5A
ECU–IG
(BAT)
30A
CDS FAN
J 4
Junction Connector
FAN NO. 1
Relay
FAN NO. 2
Relay
FAN NO. 3
Relay
J 2
Junction
Connector
J 9
Junction Connector
J10
Junction Connector
R 1
Radiator Fan Motor
P 1
Pressure SW
Single
A 1
A/C Condenser Fan Motor
W 4
Water Temp. SW
A 8
A/C Control Assembly
RF
CF
EE
EF
EA
W–B
LG

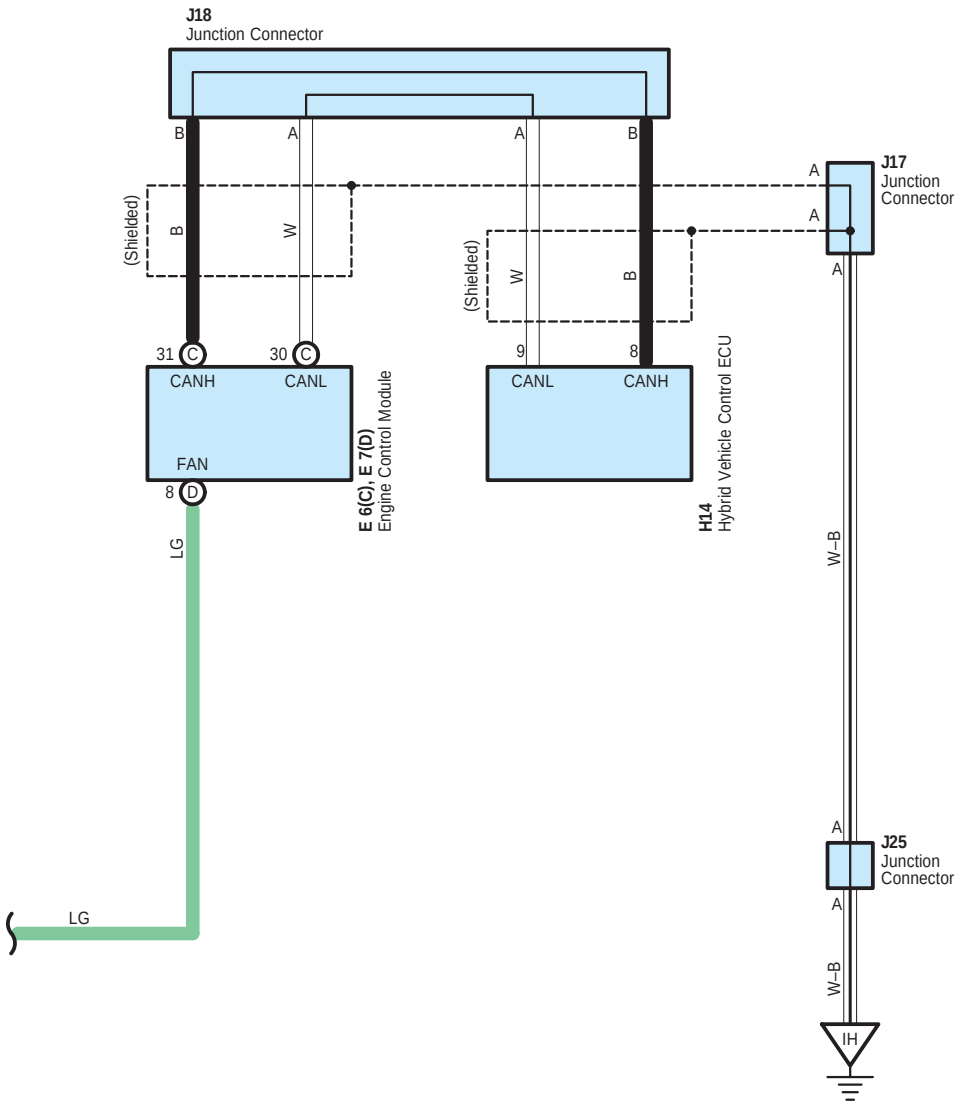
J18
Junction Connector
B
A
A
B
(Shielded)
B
W
W
B
(Shielded)
A
J17
Junction
Connector
A
A
31
C
30
C
9
8
CANH
CANL
CANL
CANH
FAN
8
D
E 6(C), E 7(D)
Engine Control Module
H14
Hybrid Vehicle Control ECU
LG
W–B
A
J25
Junction
Connector
A
W–B
IH
LG

Radiator Fan and Condenser Fan

System Outline

The radiator fan motor and A/C condenser fan motor operate according to the water temp. SW (Inverter), A/C single pressure SW, engine coolant temp. and the A/C system condition. The FAN NO.1 relay, FAN NO.2 relay, FAN NO.3 relay are turned on/off, to operate the fan motors at low speed (In series), or high speed (In parallel).

1. Low Speed operation

When the water temp. SW (Inverter) is on and/or A/C control assembly is in operation, the radiator fan motor and A/C condenser fan motor operate at low speed.

2. High Speed Operation

When the pressure SW (Single) is on, engine control module and/or A/C control assembly, the radiator fan motor operate and A/C condenser fan motor operates at high speed.

: Parts Location

Code	See Page	Code	See Page	Code	See Page
A1	46	J2	47	J18	50
A8	48	J4	47	J25	50
E6 C	49	J9	50	P1	47
E7 D	49	J10	50	R1	47
H14	49	J17	50	W4	47

: Relay Blocks

Code	See Page	Relay Blocks (Relay Block Location)
3	22	Engine Room R/B (Engine Compartment Left)

: Junction Block and Wire Harness Connector

Code	See Page	Junction Block and Wire Harness (Connector Location)
1A	30	Engine Room Main Wire and Driver Side J/B (Lower Finish Panel)
3B	23	Engine Room Main Wire and Engine Room J/B (Engine Compartment Left)
3G	24	
5H	42	Instrument Panel Wire and Center Connector No.2 (Instrument Panel Brace RH)
5J		

: Connector Joining Wire Harness and Wire Harness

Code	See Page	Joining Wire Harness and Wire Harness (Connector Location)
IA2	58	Engine Room Main Wire and Instrument Panel Wire (Upper Parts of Front Body Pillar LH)

: Ground Points

Code	See Page	Ground Points Location
EA	56	Right Side of the Fender Apron
EE	56	Left Side of the Suspension Tower
EF		
IH	58	Cowl Side Panel LH

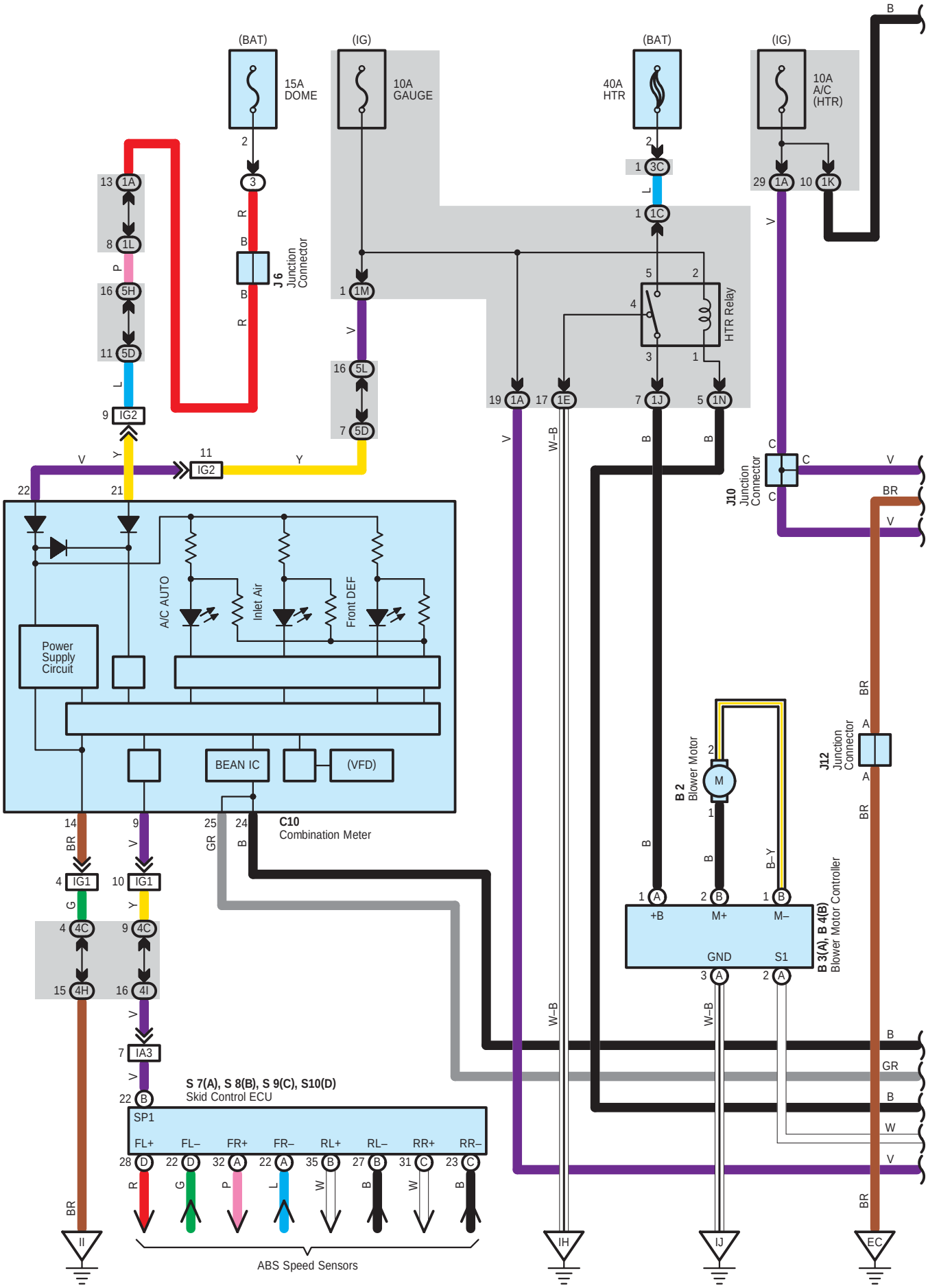
(BAT)
15A
DOME
(IG)
10A
GAUGE
(BAT)
40A
HTR
(IG)
10A
A/C
(HTR)
J6
Junction
Connector
HTR Relay
J10
Junction
Connector
J12
Junction
Connector
B 2
Blower Motor
B 3(A), B 4(B)
Blower Motor Controller
Power
Supply
Circuit
A/C AUTO
Inlet Air
Front DEF
BEAN IC
(VFD)
C10
Combination Meter
S 7(A), S 8(B), S 9(C), S10(D)
Skid Control ECU
SP1
FL+
FL–
FR+
FR–
RL+
RL–
RR+
RR–
ABS Speed Sensors
+B
M+
M–
GND
S1
IG1
IG2
IA3
II
IH
IJ
EC

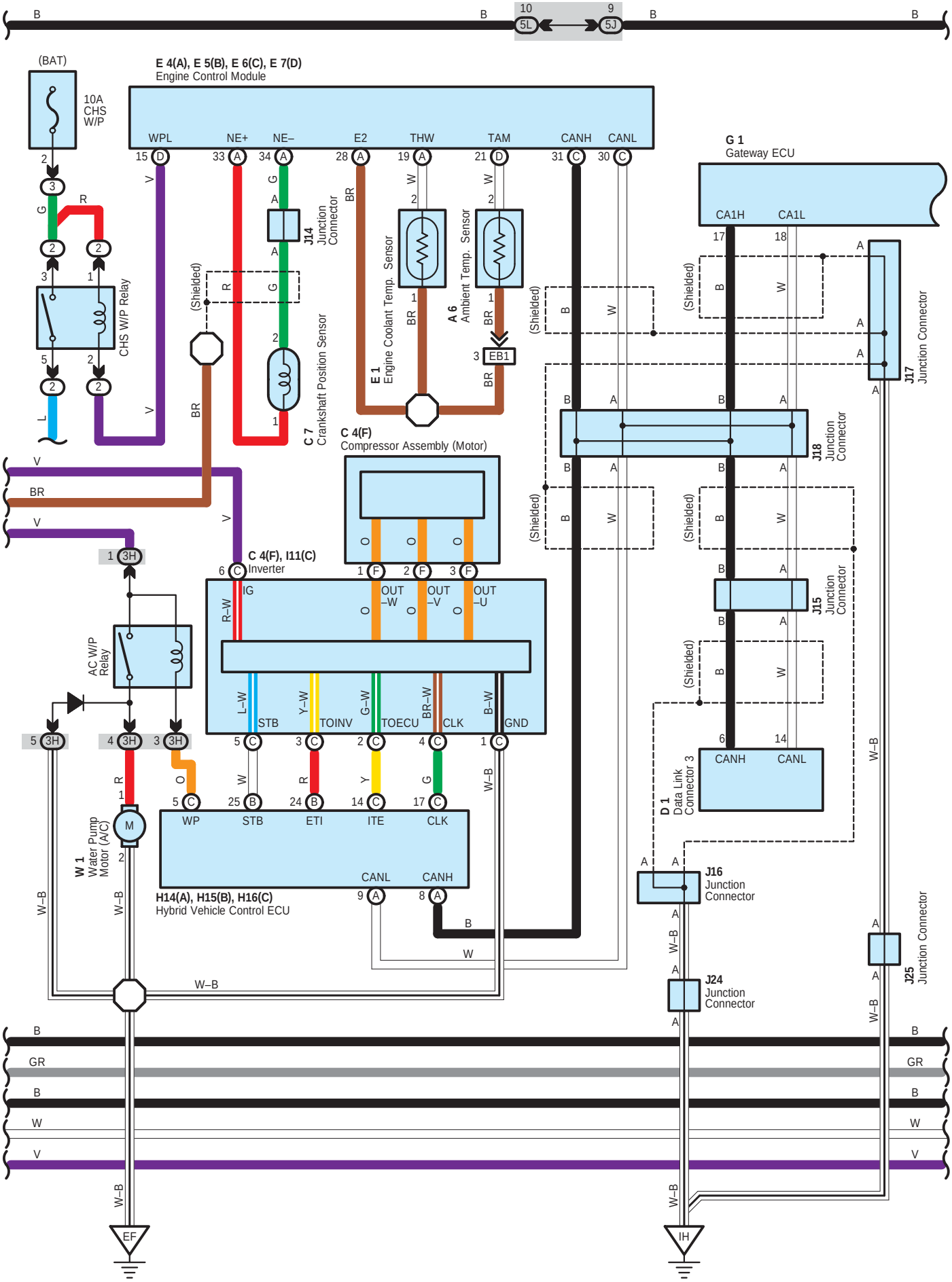
(BAT)
10A CHS W/P
CHS W/P Relay
E 4(A), E 5(B), E 6(C), E 7(D)
Engine Control Module
WPL
NE+
NE–
E2
THW
TAM
CANH
CANL
J14 Junction Connector
C 7 Crankshaft Position Sensor
E 1 Engine Coolant Temp. Sensor
A 6 Ambient Temp. Sensor
EB1
G 1 Gateway ECU
CA1H
CA1L
J17 Junction Connector
J18 Junction Connector
J15 Junction Connector
D 1 Data Link Connector 3
C 4(F) Compressor Assembly (Motor)
C 4(F), I11(C) Inverter
IG
OUT –W
OUT –V
OUT –U
STB
TOINV
TOECU
CLK
GND
AC W/P Relay
W 1 Water Pump Motor (A/C)
WP
STB
ETI
ITE
CLK
H14(A), H15(B), H16(C) Hybrid Vehicle Control ECU
J16 Junction Connector
J24 Junction Connector
J25 Junction Connector
(Shielded)
EF
IH

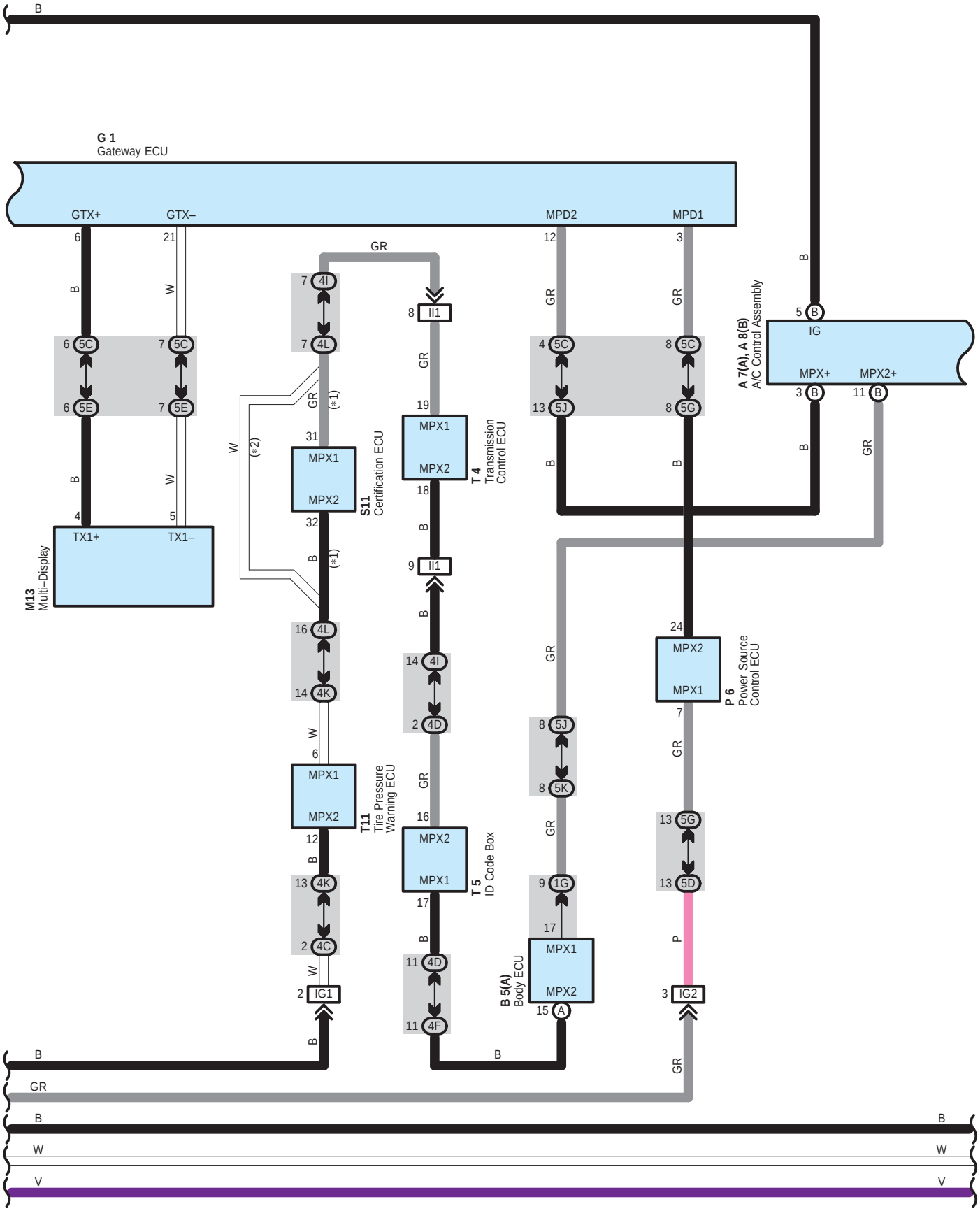
G 1
Gateway ECU
GTX+
GTX–
MPD2
MPD1
M13
Multi–Display
TX1+
TX1–
S11
Certification ECU
MPX1
MPX2
T 4
Transmission
Control ECU
T11
Tire Pressure
Warning ECU
T 5
ID Code Box
B 5(A)
Body ECU
P 6
Power Source
Control ECU
A 7(A), A 8(B)
A/C Control Assembly
IG
IG1
IG2
(*1)
(*2)

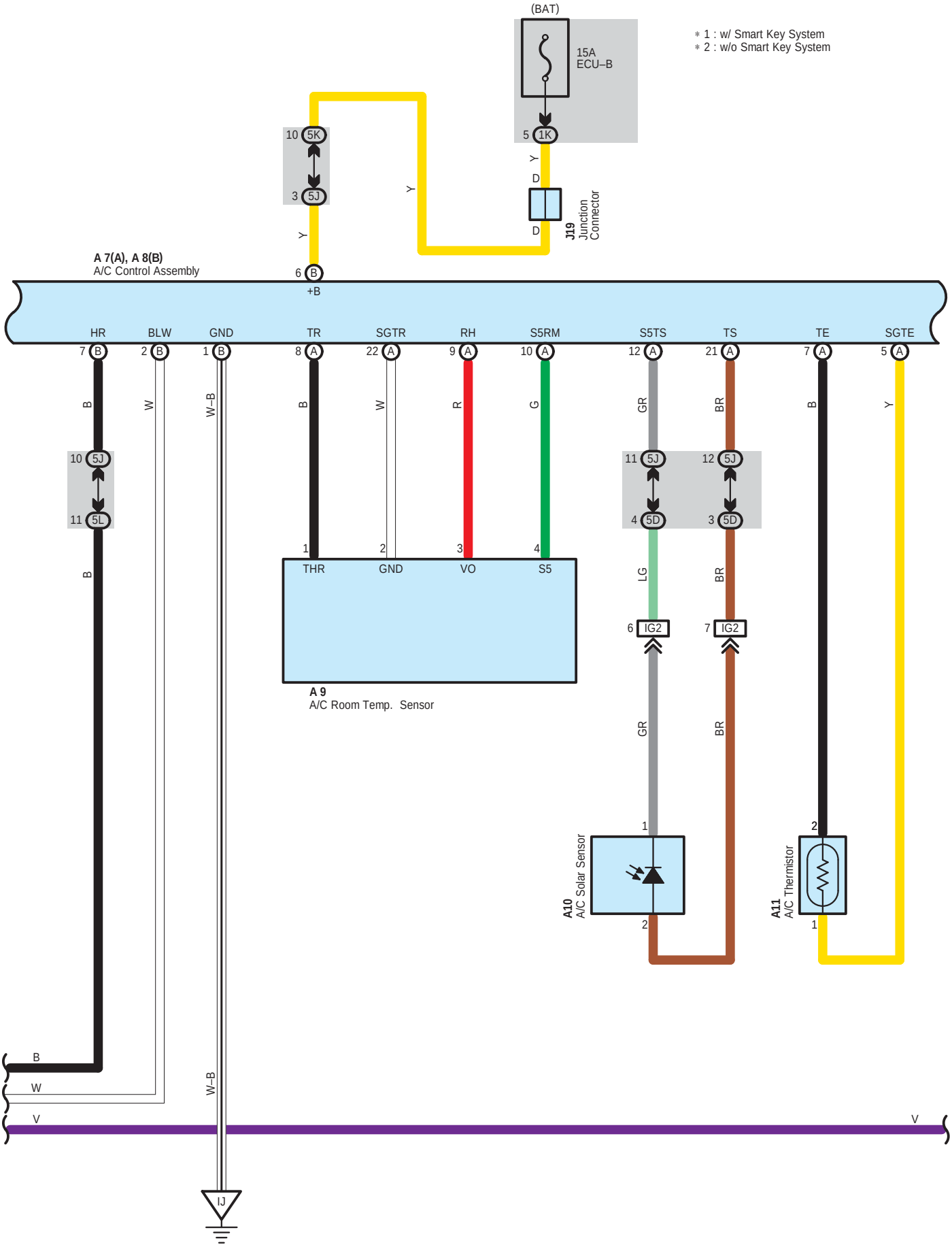
(BAT)
15A
ECU–B
5 1K
* 1 : w/ Smart Key System
* 2 : w/o Smart Key System
10 5K
3 5J
Y
D
D
J19
Junction
Connector
A 7(A), A 8(B)
A/C Control Assembly
6 B
+B
HR
BLW
GND
TR
SGTR
RH
S5RM
S5TS
TS
TE
SGTE
7 B
2 B
1 B
8 A
22 A
9 A
10 A
12 A
21 A
7 A
5 A
B
W
W–B
B
W
R
G
GR
BR
B
Y
10 5J
11 5L
B
11 5J
12 5J
4 5D
3 5D
LG
BR
1
2
3
4
THR
GND
VO
S5
A 9
A/C Room Temp. Sensor
6 IG2
7 IG2
GR
BR
1
2
A10
A/C Solar Sensor
2
1
A11
A/C Thermistor
1
B
W
W–B
V
V
IJ

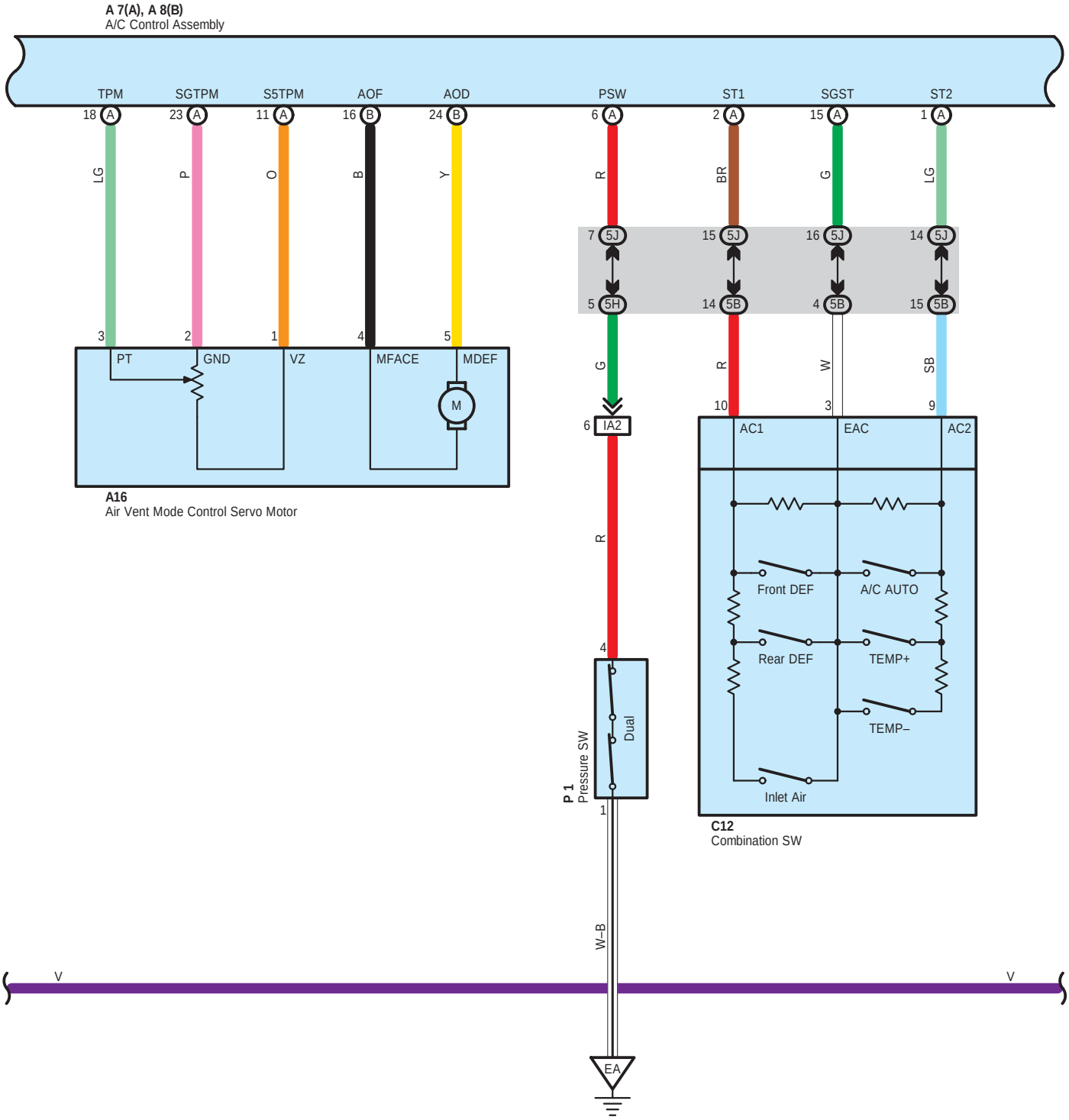
A 7(A), A 8(B)
A/C Control Assembly
TPM
SGTPM
S5TPM
AOF
AOD
PSW
ST1
SGST
ST2
18 A
23 A
11 A
16 B
24 B
6 A
2 A
15 A
1 A
LG
P
O
B
Y
R
BR
G
LG
7 5J
15 5J
16 5J
14 5J
5 5H
14 5B
4 5B
15 5B
3
2
1
4
5
PT
GND
VZ
MFACE
MDEF
M
A16
Air Vent Mode Control Servo Motor
G
R
W
SB
6 IA2
10
3
9
AC1
EAC
AC2
R
Front DEF
A/C AUTO
Rear DEF
TEMP+
TEMP–
Inlet Air
C12
Combination SW
4
P 1
Pressure SW
Dual
1
W–B
V
V
EA

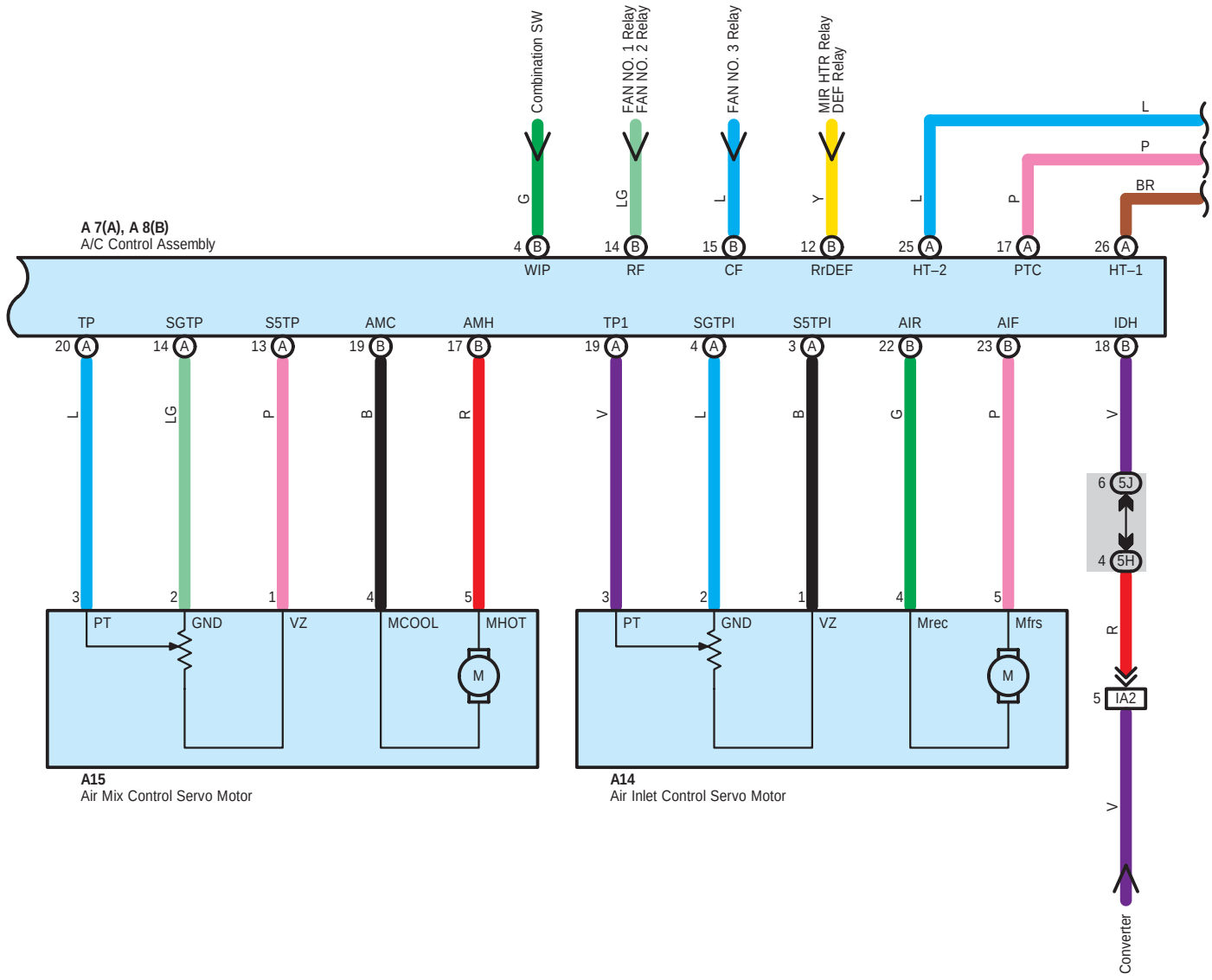
Combination SW
FAN NO. 1 Relay
FAN NO. 2 Relay
FAN NO. 3 Relay
MIR HTR Relay
DEF Relay
A 7(A), A 8(B)
A/C Control Assembly
WIP
RF
CF
RrDEF
HT–2
PTC
HT–1
TP
SGTP
S5TP
AMC
AMH
TP1
SGTPI
S5TPI
AIR
AIF
IDH
PT
GND
VZ
MCOOL
MHOT
Mrec
Mfrs
M
A15
Air Mix Control Servo Motor
A14
Air Inlet Control Servo Motor
5J
5H
IA2
Converter


V
V

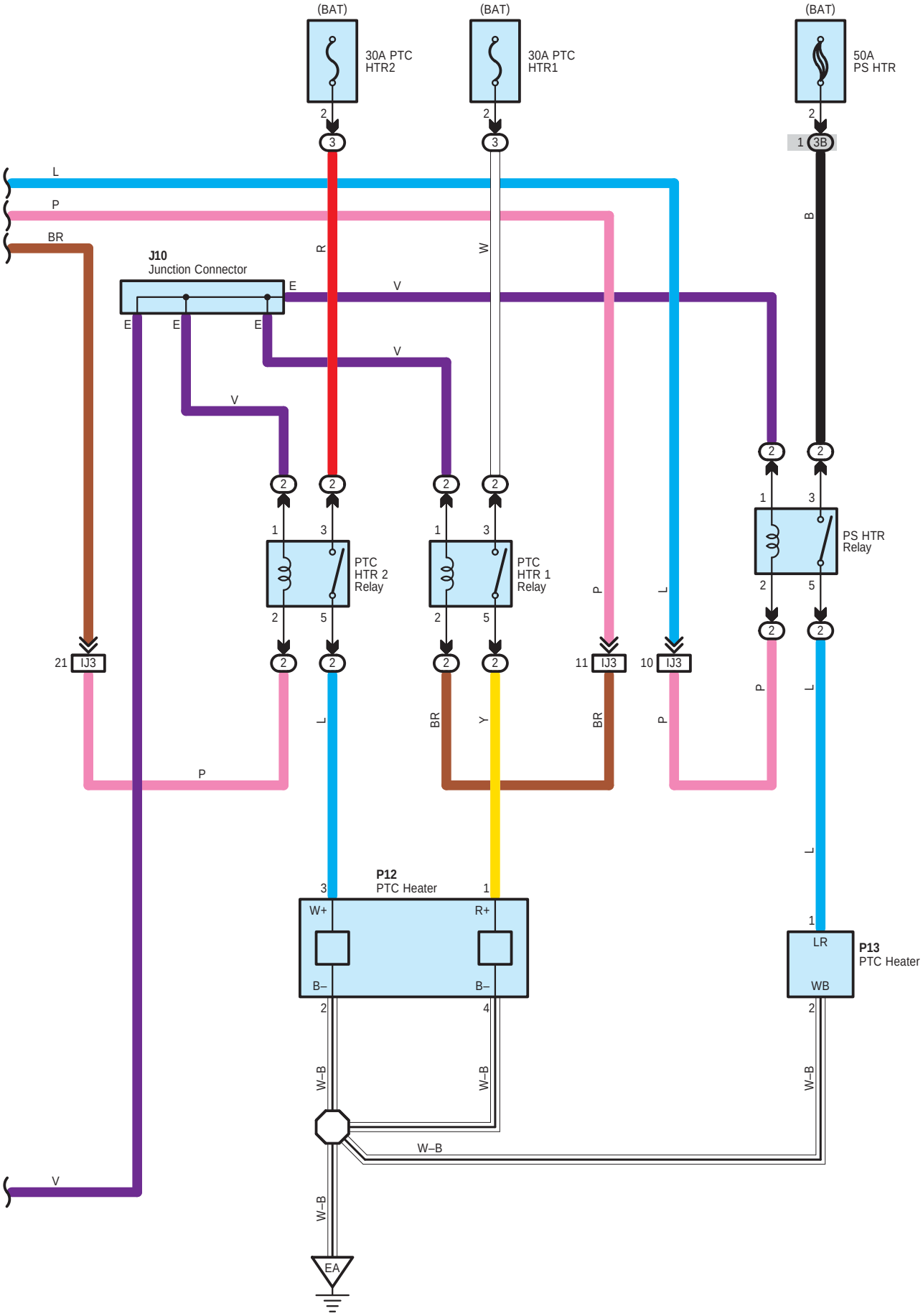
(BAT)
30A PTC HTR2
(BAT)
30A PTC HTR1
(BAT)
50A PS HTR
L
P
BR
J10
Junction Connector
E
V
R
W
B
PTC HTR 2 Relay
PTC HTR 1 Relay
PS HTR Relay
21 IJ3
11 IJ3
10 IJ3
P12
PTC Heater
W+
R+
B–
P13
PTC Heater
LR
WB
W–B
EA

System Outline

Air conditioning system operates when SW of multi–display or that of steering wheel is turned on. Turning on the SW sends signal to A/C control assembly, running the air conditioning system.

1. Heater Blower Operation

Manual operation

When the blower speed is set to a certain level using the blower control SW, the A/C control assembly sends the signals to the blower control to control the blower motor speed.

Auto operation

When the auto SW is pushed, the A/C control assembly calculates necessary blower speed from setting of SWs and input of the sensors and sends the signals to the blower control to automatically control the blower motor speed.

2. Air Inlet Control Servo Motor Control

When the FRESH/RECIRC select SW is set to RECIRC, the air inlet control servo motor starts rotating to move the damper toward the RECIRC side. The damper position is detected by the TERMINAL TPI of the A/C control assembly. The motor continuously rotates until the damper reaches its stop position. When the FRESH/RECIRC select SW is set to FRESH, the air inlet control servo motor starts rotating to move the damper toward the FRESH side. The damper position is detected by the TERMINAL TPI of the A/C control assembly. The motor continuously rotates until the damper reaches its stop position.

In auto mode, A/C control assembly controls the damper to move to the best position for the conditions without operating the mode select SW.

3. Air Vent Mode Control Servo Motor Control

When the mode select SW is pushed, the ECU in the A/C control assembly activates the air vent mode control servo motor. The servo motor rotates to the position (FACE, BI–LEVEL, FOOT, FOOT/DEF, DEF) selected by using the mode select SW, and moves the damper.

In auto mode, A/C control assembly controls the damper to move to the best position for the conditions without operating the mode select SW.

4. Air Mix Control Servo Motor Control

Based on the set temperature by the temperature control SW, the ECU in the A/C control assembly sends a signal to the air mix control servo motor. This signal drives the motor to reach the temperature set by the temperature control SW, and moves the film damper.

5. Humidity Sensor Control

A/C control assembly detects humidity in passenger room when A/C is turned on, with humidity detecting function of A/C room temp. sensor and controls to dehumidify for comfortable condition

6. Air Conditioning Operation

A/C control assembly calculates target cooled temperature from information such as that of operating SWs, room temperature, humidity, ambient temperature and insolation to have target running speed of compressor assembly (Motor). The calculated control signal is sent to inverter to drive compressor assembly (Motor) (Electric motor) with control of inverter, resulting in operating A/C.

○ : Parts Location

Code	See Page	Code	See Page	Code	See Page
A6	46	E1	46	J19	50
A7 A	48	E4 A	49	J24	50
A8 B	48	E5 B	49	J25	50
A9	48	E6 C	49	M13	50
A10	48	E7 D	49	P1	47
A11	48	G1	49	P6	51
A14	48	H14 A	49	P12	51
A15	48	H15 B	49	P13	51
A16	48	H16 C	49	S7 A	51
B2	48	I11 C	47	S8 B	51
B3 A	48	J6	50	S9 C	51
B4 B	48	J10	50	S10 D	51
B5 A	48	J12	50	S11	51
C4 F	46	J14	50	T4	51
C7	46	J15	50	T5	51
C10	49	J16	50	T11	51
C12	49	J17	50	W1	47
D1	49	J18	50		

▭ : Relay Blocks

Code	See Page	Relay Blocks (Relay Block Location)
2	28	Engine Room R/B No.2 (Right Side of Reserve Tank)
3	22	Engine Room R/B (Engine Compartment Left)

: **Junction Block and Wire Harness Connector**

Code	See Page	Junction Block and Wire Harness (Connector Location)
1A	30	Engine Room Main Wire and Driver Side J/B (Lower Finish Panel)
1C		
1E	30	Instrument Panel Wire and Driver Side J/B (Lower Finish Panel)
1G		
1J		
1K	31	
1L		
1M		
1N		
3B	23	Engine Room Main Wire and Engine Room J/B (Engine Compartment Left)
3C		
3H	24	
4C	38	Instrument Panel Wire and Center Connector No.1 (Behind the Combination Meter)
4D		
4F		
4H		
4I		
4K		
4L		
5B	42	Instrument Panel Wire and Center Connector No.2 (Instrument Panel Brace RH)
5C		
5D		
5E		
5G		
5H		
5J		
5K		
5L		

: **Connector Joining Wire Harness and Wire Harness**

Code	See Page	Joining Wire Harness and Wire Harness (Connector Location)
EB1	56	Engine Wire and Engine Room Main Wire (Inside of the Engine Room R/B)
IA2	58	Engine Room Main Wire and Instrument Panel Wire (Upper Parts of Front Body Pillar LH)
IA3		
IG1	59	Instrument Panel Wire and Instrument Panel No.2 Wire (Behind the Combination Meter)
IG2		
II1	59	Engine Wire and Instrument Panel Wire (Behind the Glove Box)
IJ3	59	Engine Room Main Wire and Instrument Panel Wire (Behind the Glove Box)

: **Ground Points**

Code	See Page	Ground Points Location
EA	56	Right Side of the Fender Apron
EC	56	Engine Block
EF	56	Left Side of the Suspension Tower
IH	58	Cowl Side Panel LH
II	58	Instrument Panel Brace LH
IJ	58	Instrument Panel Brace RH

2007 PRIUS
ELECTRICAL WIRING DIAGRAM
SYSTEM CIRCUITS

	Page
ABS	282
Air Conditioning	352
Audio System (Built–in Amplifier)	334
Audio System (Separate Amplifier)	324
Automatic Glare–Resistant EC Mirror	320
Automatic Light Control	156
Back–Up Light	184
Clock	310
Combination Meter	342
Cruise Control	262
Door Lock Control	202
Engine Control	128
EPS	276
Front Fog Light	158
Front Wiper and Washer	194
Garage Door Opener	322
Headlight	144
Headlight Beam Level Control	152
Horn	308
Hybrid Vehicle Immobiliser System	80
Ignition	124
Illumination	176
Interior Light	168
Key Reminder	188
Light Auto Turn Off System	160
Luggage Compartment Door Opener	234
Mirror Heater	316
Multi–Display (Built–in Amplifier)	334
Multi–Display (Separate Amplifier)	324
Multiplex Communication System (AVC–LAN Bus)	76
Multiplex Communication System (BEAN Bus)	68
Multiplex Communication System (CAN Bus)	72
Power Outlet	312
Power Source	64
Power Window	198
Push Button Start System	80
Radiator Fan and Condenser Fan	348
Rear Window Defogger	316
Rear Wiper and Washer	196
Remote Control Mirror	314
Seat Belt Waning	192
Shift Control System	248
Smart Key System	208
SRS	301
Stop Light	182
Taillight	176
Theft Deterrent	238